David Reyna
Aero 4312

Project Interim Report

Design Overview-

Design: The proposed aircraft is a single-engine turboprop designed to serve as a light utility and regional transport platform. The aircraft is intended for short- to medium-range missions, providing efficient transportation of passengers and light cargo between regional airports. From a customer perspective, the design prioritizes low operating cost, reliability, and short-field performance, making it suitable for operations in constrained or less-developed airfields.
Mission Profile:

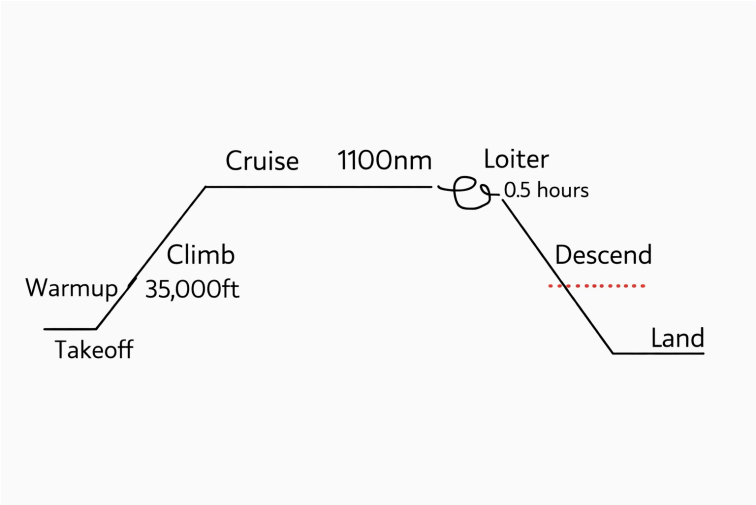

David Reyna
Aero 4312

Crew, Passengers, and Payload

Crew	1 pilot
Crew Weight	200lb
Passengers	4
Passenger's Weight	200lb each
Payload	400lb

Constraint Analysis: A constraint analysis was performed to determine the feasible design space in terms of wing loading (W/S) and power-to-weight ratio (P/W). Constraints considered include takeoff distance, landing distance, climb rate, cruise performance, stall velocity, and maneuvering (turn) requirements. These constraints were evaluated using methods described in Raymer (Chapter 5). The final design point was selected to balance performance, efficiency, and feasibility.

Sizing-

Constraints: Using Raymer's conceptual design approach, empirical relationships and statistical data were used to size the aircraft.From the constraint analysis:

- Wing loading: 20 lb/ft²
- Power-to-weight ratio: 0.065 hp/lb

These values resulted in:

- Required power: ~350 hp
- Wing area: 266 ft²

Wing Geometry: Using Raymer's design charts:

- Aspect ratio: 7 (Table 4.1)
- Taper ratio: 0.5 (Figure 4.24, adjusted for turboprop regime)
- Wingspan: 43.15 ft (Figure 4.15)
- Root chord: 8.2 ft
- Tip chord: 4.1 ft

The wing was designed with a modest sweep angle (~5°) appropriate for turboprop aircraft, ensuring efficient low-speed and cruise performance.

David Reyna
Aero 4312

Tail Geometry:Tail sizing was performed using volume coefficient methods described in Raymer (Chapter 6). Tail areas were determined based on wing geometry and moment arms, and corresponding spans and dimensions were estimated using Raymer's empirical charts.

Design Process and Trade Studies: Trade studies were a critical part of the design process. Multiple configurations were evaluated, including:

- Wing geometry (aspect ratio, taper, sweep)
- Tail configuration (including V-tail selection)
- Landing gear configuration
- Mission parameters (range, speed)
- Engine and propulsion selection

An important design iteration involved correcting an initially high wing sweep angle, which resulted in an unrealistic taper ratio. The sweep was reduced to better match turboprop performance, leading to a more balanced and realistic wing design.

Additionally, comparisons to existing aircraft were used throughout the process to validate assumptions and ensure the design remained realistic.

Cad Layout-

TOP VIEW:

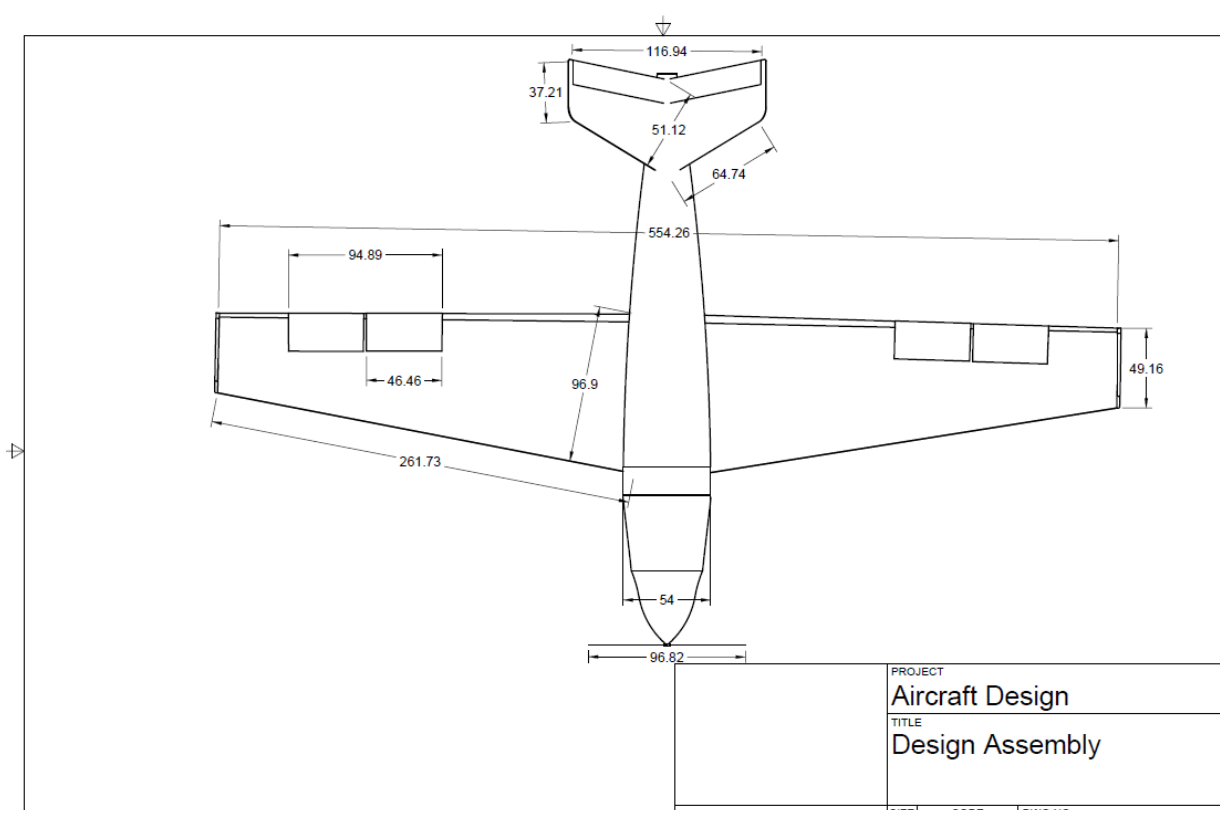

David Reyna
Aero 4312

SIDE VIEW:

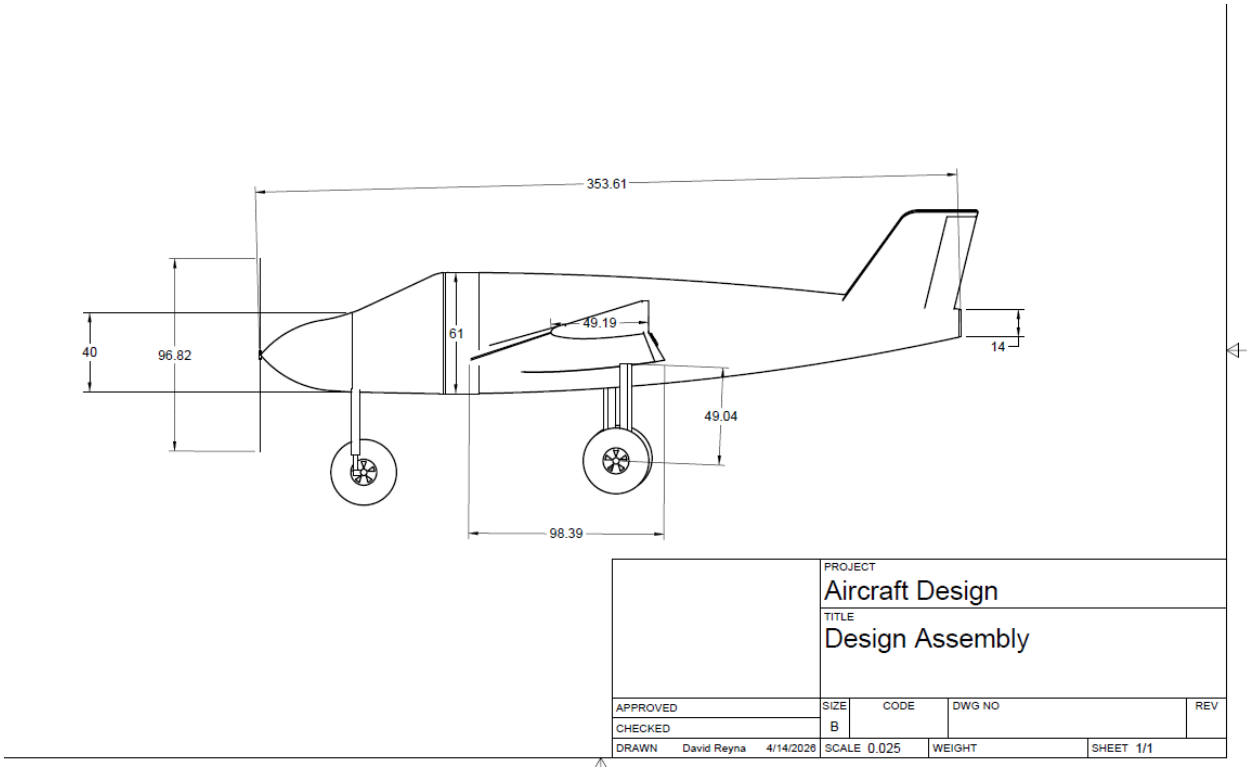

FRONT VIEW

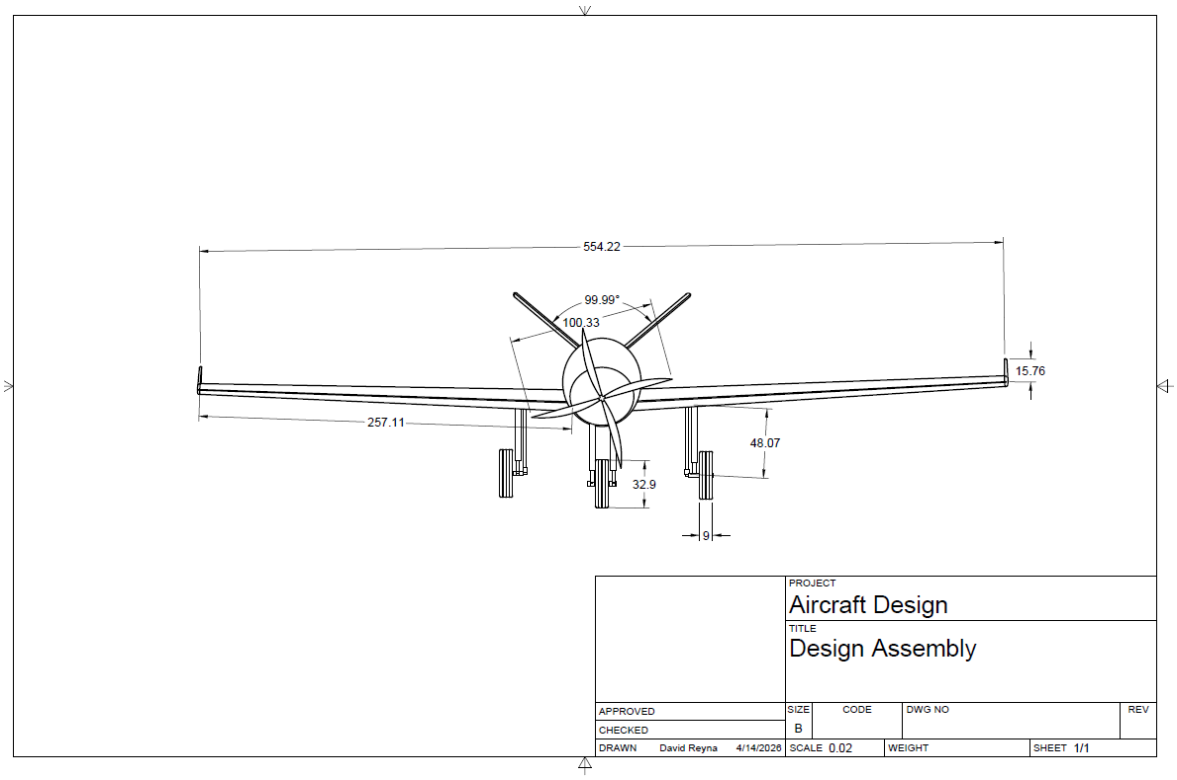

David Reyna
Aero 4312

SIDE LAYOUT

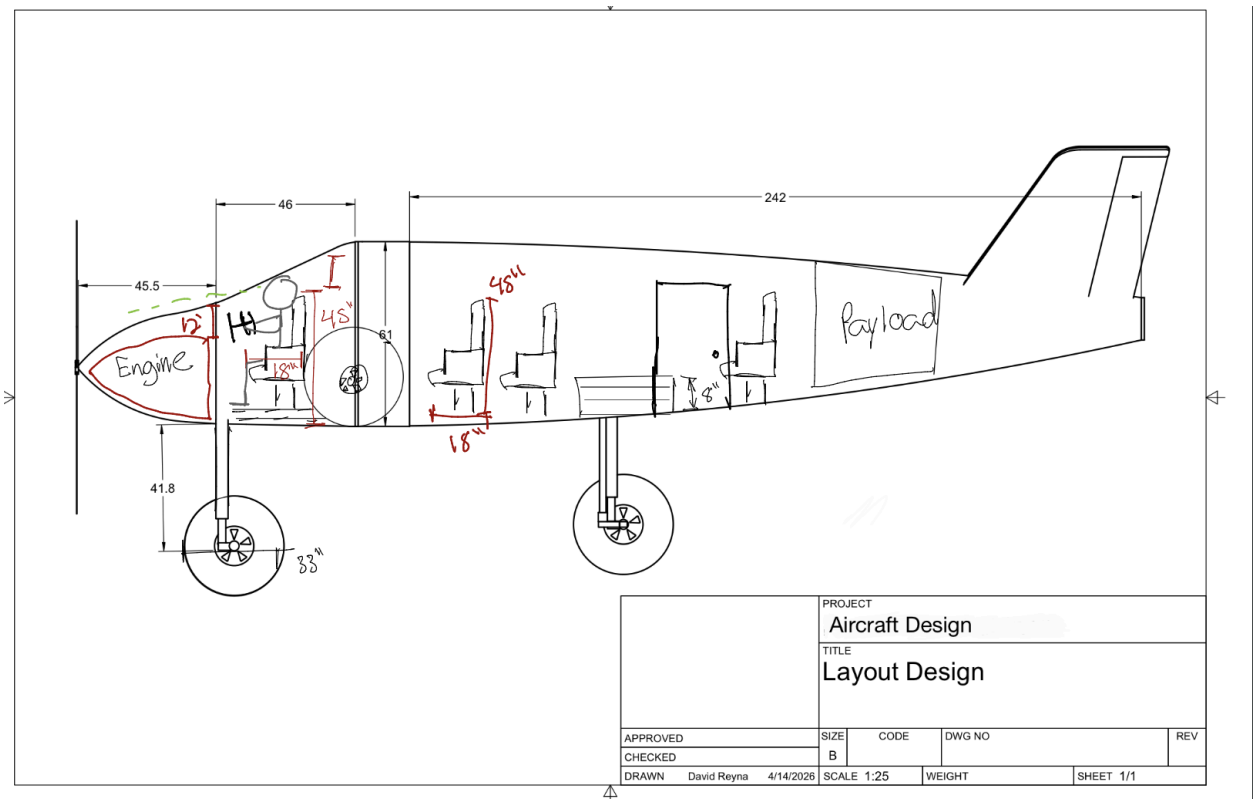

Conclusion/Future Work-

Conclusion: I believe my design sufficiently meets the requirements, with a large wing area and more than sufficient power, we are able to meet the take off requirement, allowing for this design to have STOL capabilities. Once in the air, the V-tail and wing configuration will allow for safe, stable and efficient flight, keeping gas consumption to a relative lower end.

Concerns and Risks:

- The selected engine provides excess power, which may result in inefficiencies in fuel consumption and space utilization
- Structural assumptions are preliminary and may require reinforcement, increasing weight
- Aerodynamic estimates are simplified and may differ from real-world performance
- Cockpit area
- Nose landing gear

Future Work: Future improvements to the design include:

- Detailed aerodynamic analysis (CFD)
- Structural design and validation
- Refined weight estimation

David Reyna
Aero 4312

- Optimization of engine selection