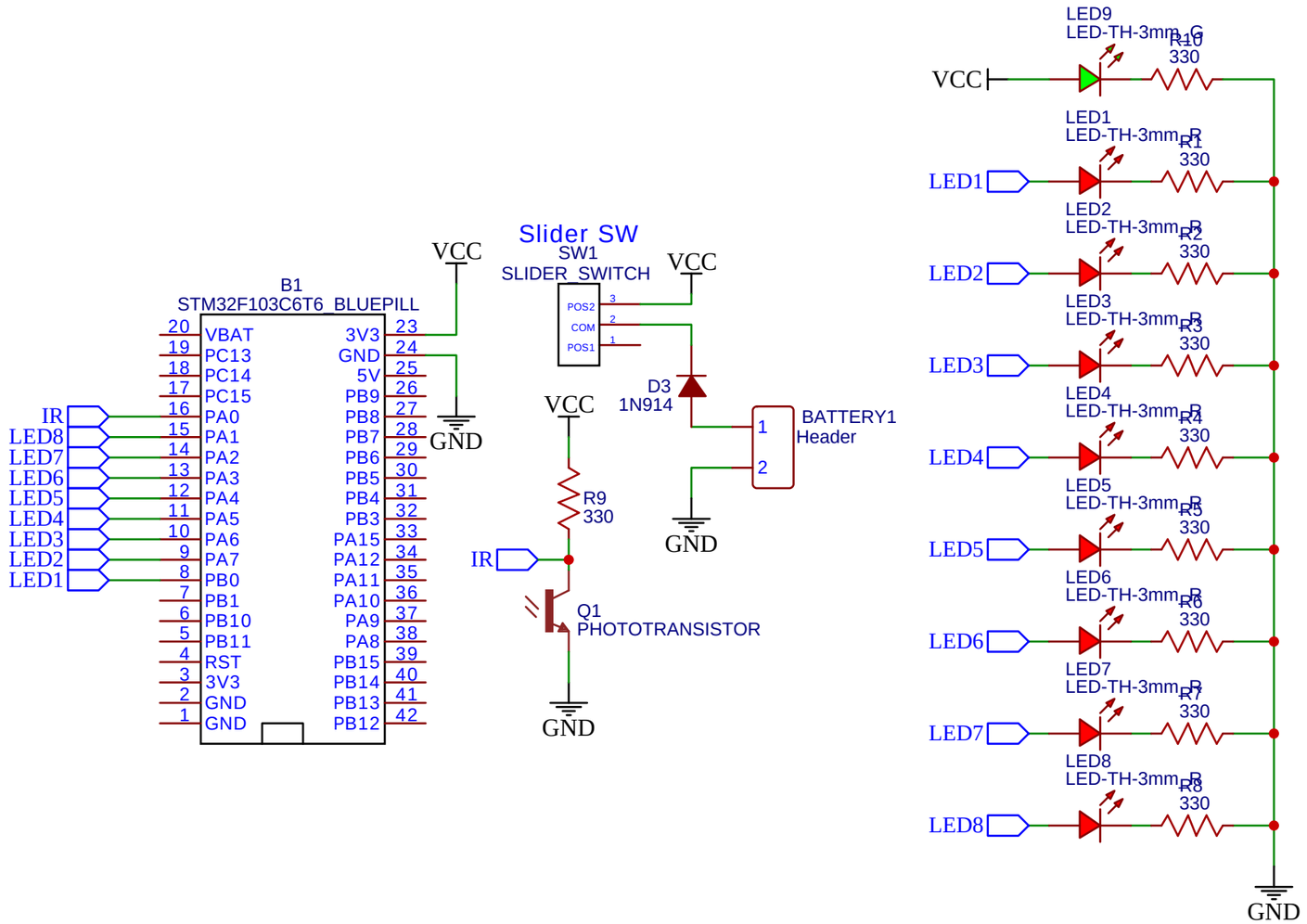

TITLE: POV_Display		REV: 1.0
D.S	Company: Smarty	Sheet: 1/1
	Date: 2024-01-28 Drawn By: David S. Alexander	