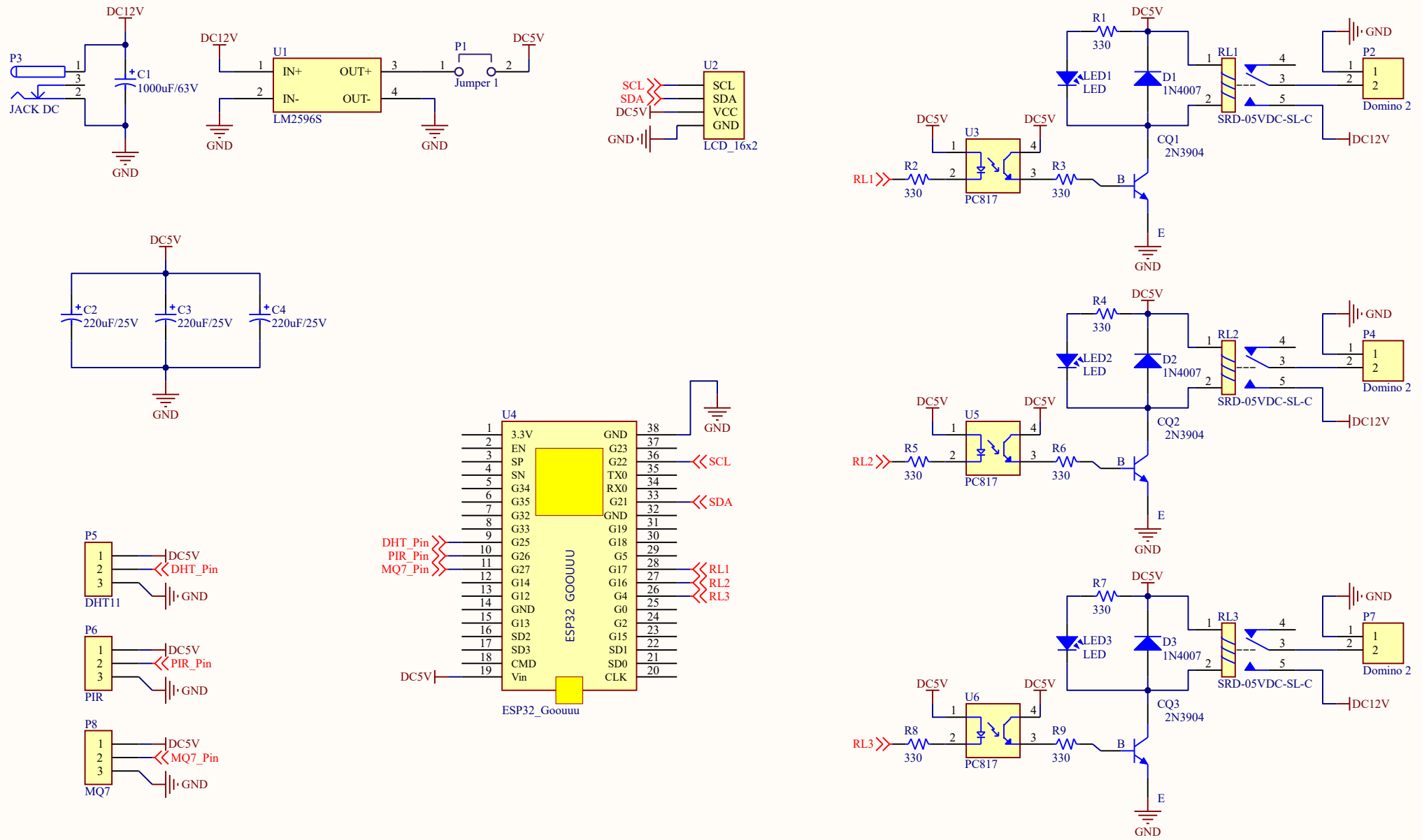

Title		
Size A4	Number	Revision
Date: 8/22/2024		Sheet of
File: C:\Users\..\Schematic.SchDoc		Drawn By: