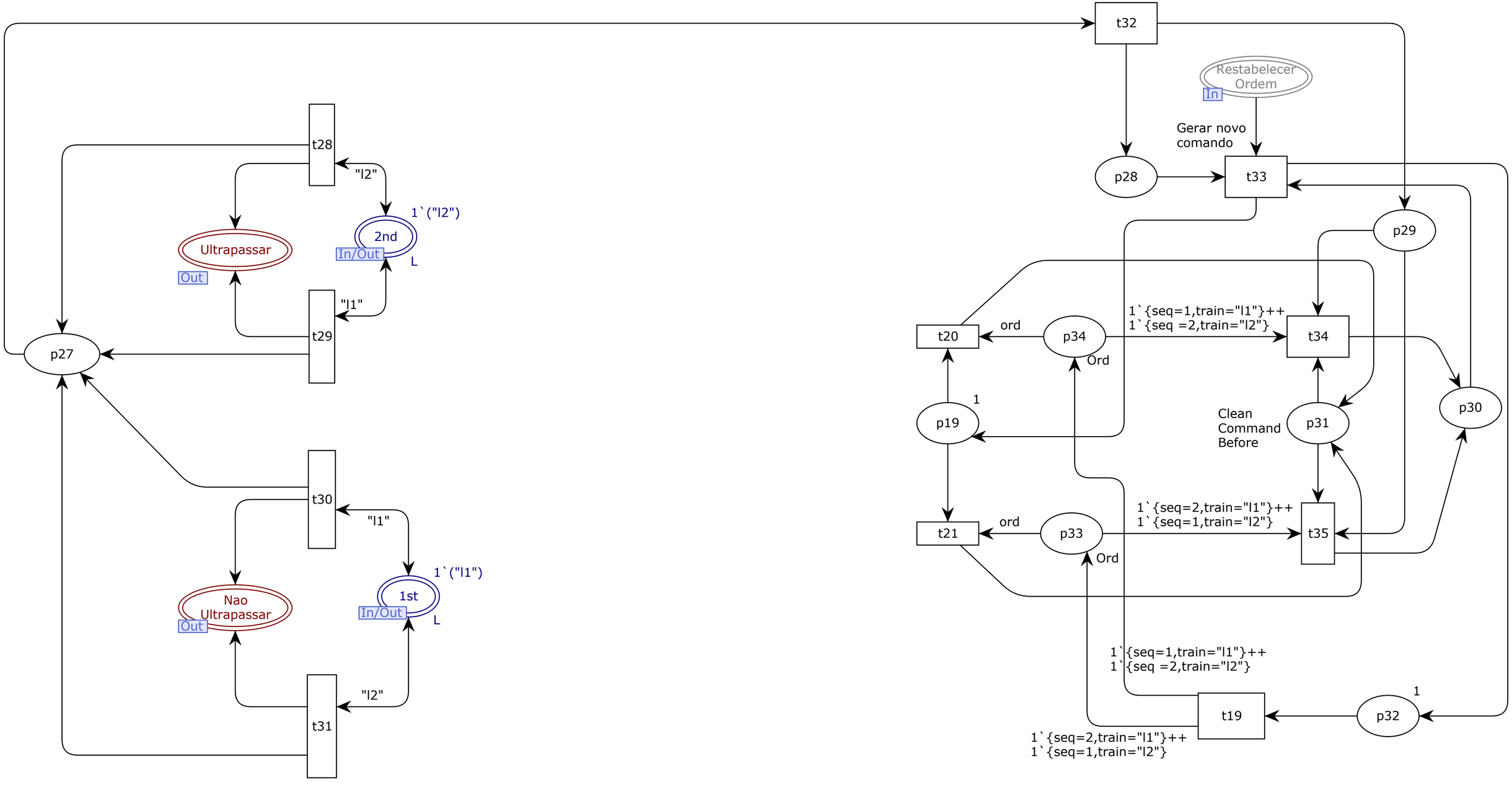
t32
Restabelecer Ordem
In
Gerar novo comando
p28
t33
p29
t28
"l2"
1`("l2")
2nd
In/Out
L
Ultrapassar
Out
"l1"
t29
p27
t20
ord
p34
Ord
1`{seq=1,train="l1"}++
1`{seq =2,train="l2"}
t34
1
p19
Clean Command Before
p31
p30
t30
"l1"
1`("l1")
1st
In/Out
L
Nao Ultrapassar
Out
t21
ord
p33
Ord
1`{seq=2,train="l1"}++
1`{seq=1,train="l2"}
t35
1`{seq=1,train="l1"}++
1`{seq =2,train="l2"}
"l2"
t31
t19
1
p32
1`{seq=2,train="l1"}++
1`{seq=1,train="l2"}