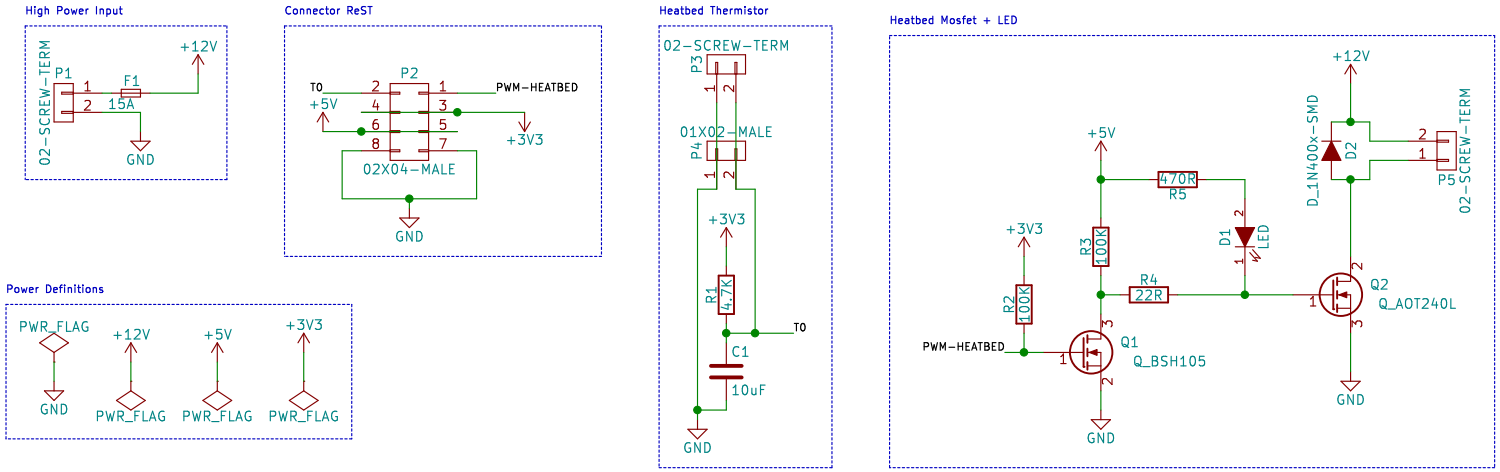

Matthias Nowak

Sheet: /

File: Rest-Heatbed-Module.sch

Title: ReST32 Heatbed Module

Size: A4	Date: 2016-02-27	**Rev: Rev. A**
KiCad E.D.A. kicad 4.0.1-stable		Id: 1/1