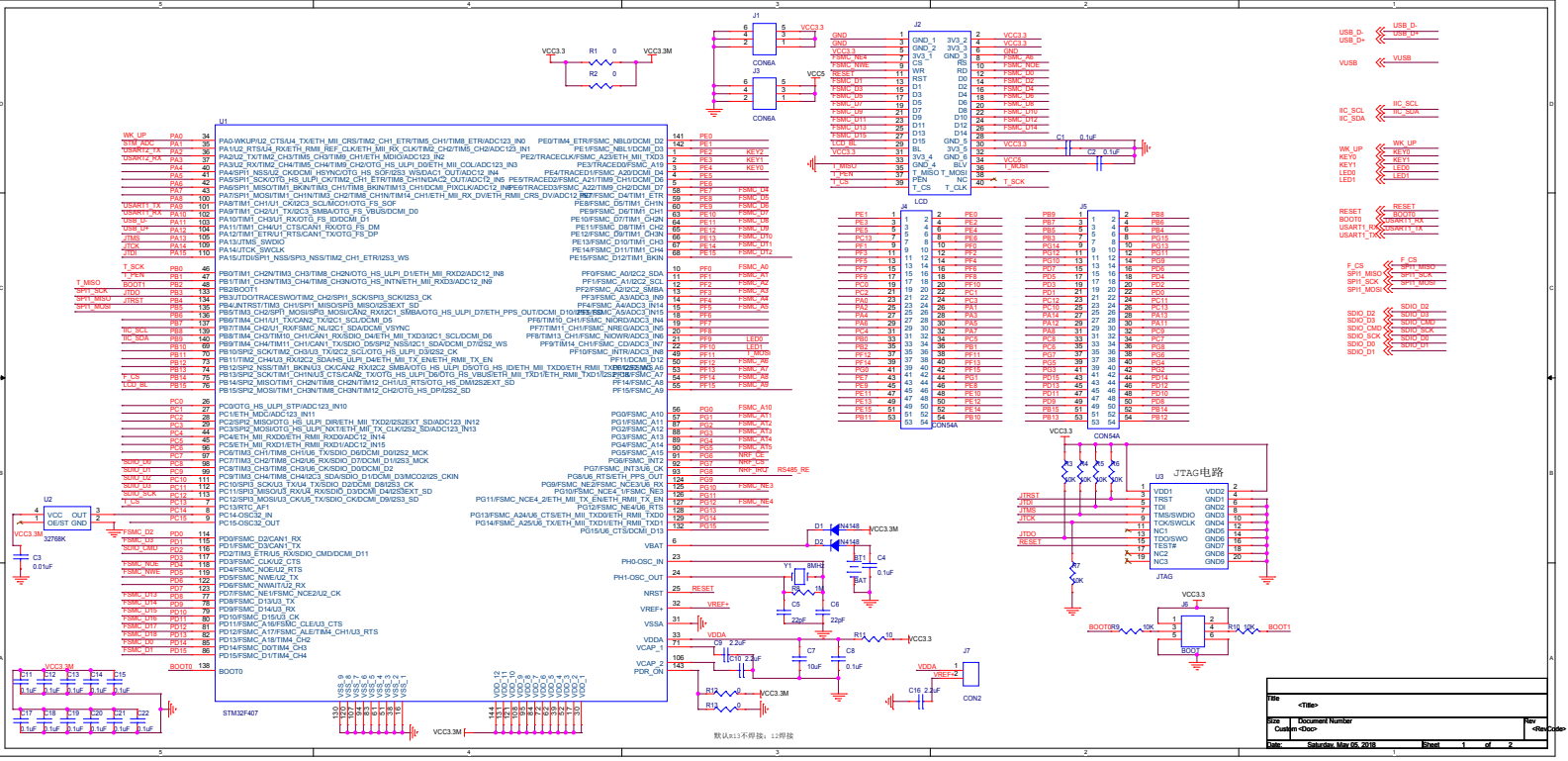
U1
STM32F407
U2
32768K
U3
JTAG电路
JTAG
J1
CON6A
J2
CON54A
J3
CON6A
J4
LCD
J5
CON54A
J6
BOOT
J7
CON2
默认pt13不焊接；12焊接
Title
<Title>
Size
Document Number
Rev
Custom
<Doc>
<Rev Code>
Date:
Saturday, May 05, 2018
Sheet
1
of
2

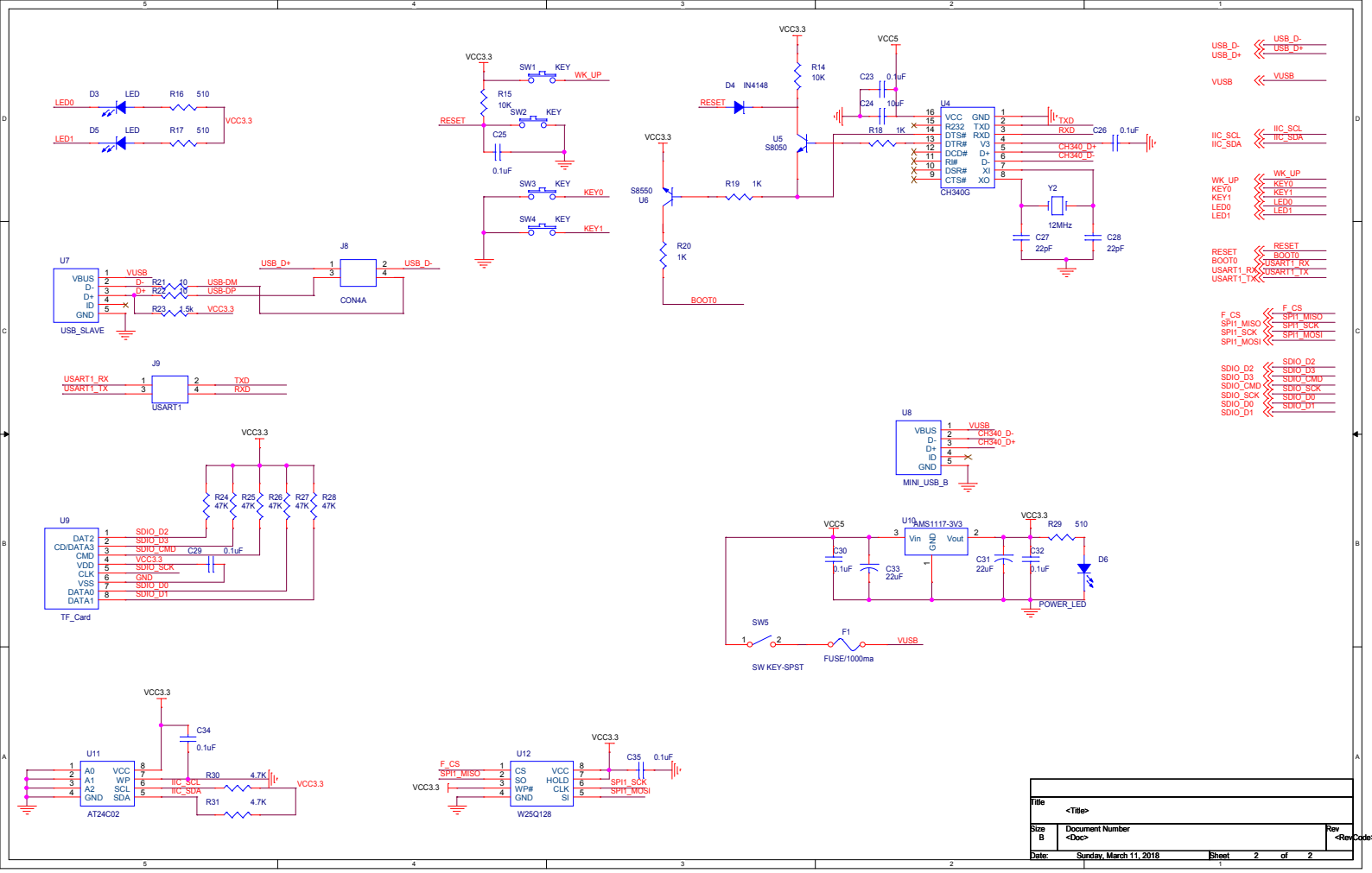

Title	<Title>	
Size B	Document Number <Doc>	Rev <RevCode>
Date: Sunday, March 11, 2018	Sheet 2 of 2	