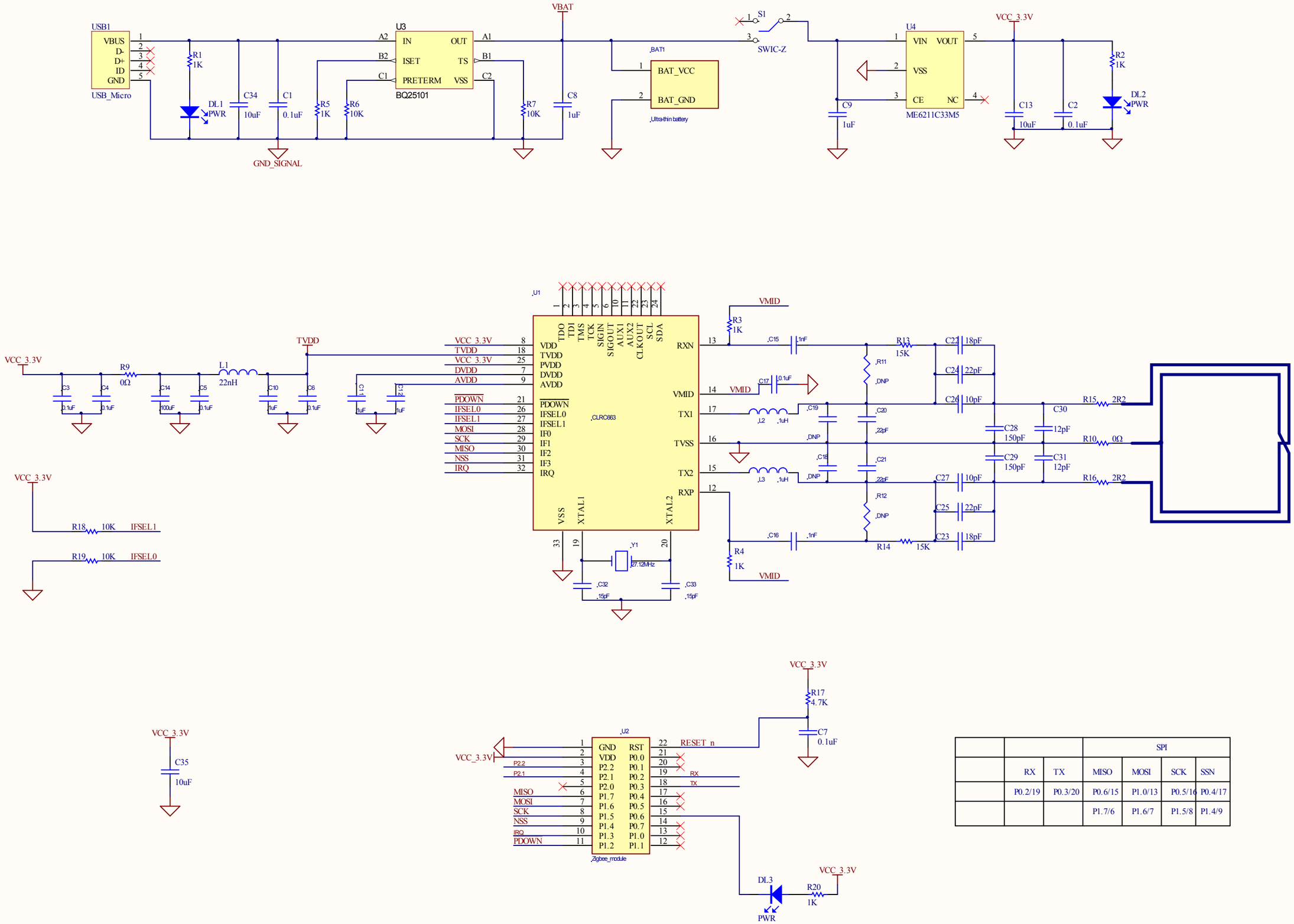

			SPI			
	RX	TX	MISO	MOSI	SCK	SSN
	P0.2/19	P0.3/20	P0.6/15	P1.0/13	P0.5/16	P0.4/17
			P1.7/6	P1.6/7	P1.5/8	P1.4/9