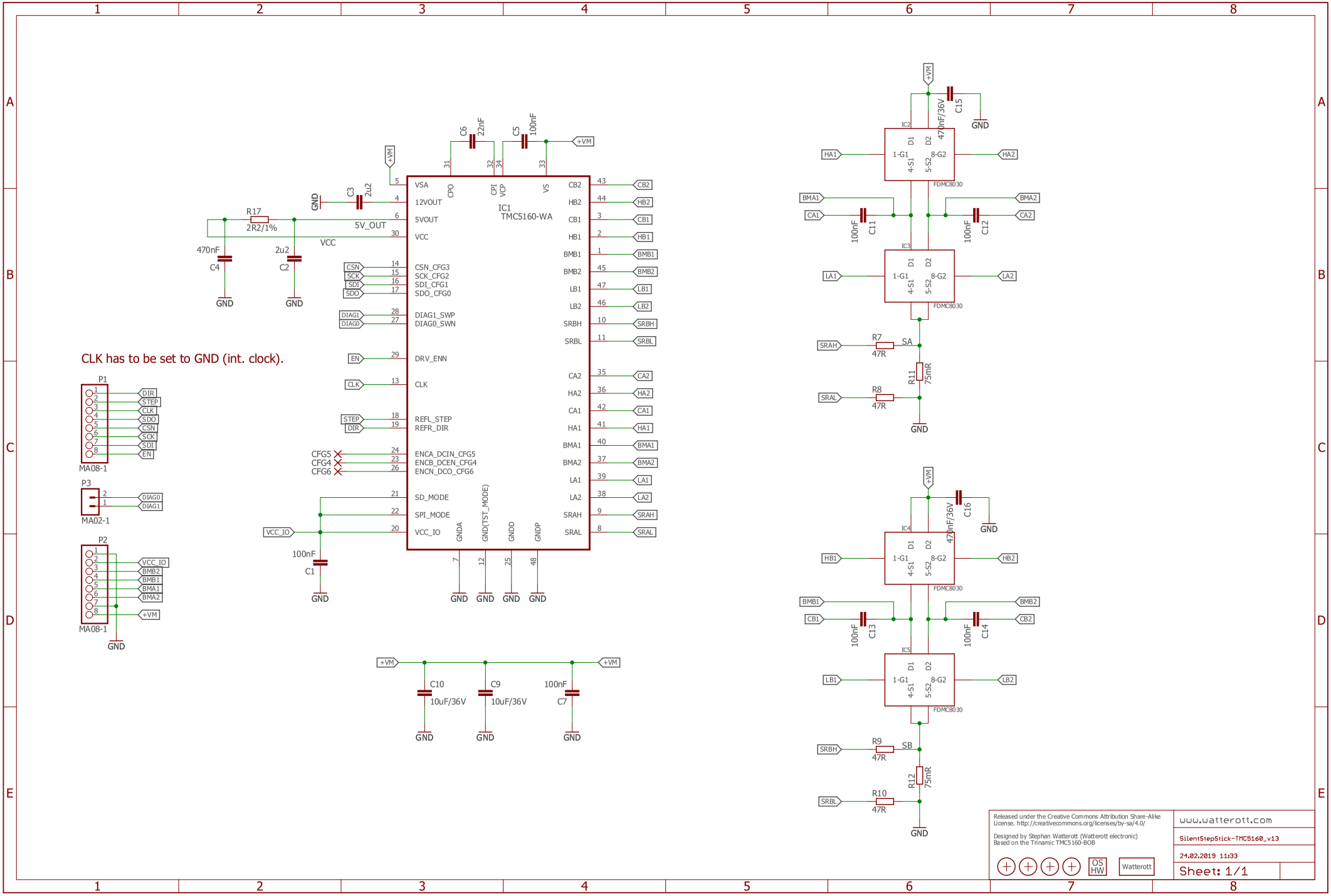
IC1
TMC5160-WA
VSA
12VOUT
5VOUT
VCC
CSN_CFG3
SCK_CFG2
SDI_CFG1
SDO_CFG0
DIAG1_SWP
DIAG0_SWN
DRV_ENN
CLK
REFL_STEP
REFR_DIR
ENCA_DCIN_CFG5
ENCB_DCEN_CFG4
ENCN_DCO_CFG6
SD_MODE
SPI_MODE
VCC_IO
CPO
CPI
VCP
VS
GNDA
GND(TST_MODE)
GNDD
GNDP
CB2
HB2
CB1
HB1
BMB1
BMB2
LB1
LB2
SRBH
SRBL
CA2
HA2
CA1
HA1
BMA1
BMA2
LA1
LA2
SRAH
SRAL
CLK has to be set to GND (int. clock).
P1
MA08-1
P3
MA02-1
P2
MA08-1
R17
2R2/1%
5V_OUT
VCC
C3
2u2
C4
470nF
C2
2u2
C6
22nF
C5
100nF
C1
100nF
C10
10uF/36V
C9
10uF/36V
C7
100nF
+VM
GND
IC2
IC3
IC4
IC5
FDMC8030
1-G1
4-S1
5-S2
8-G2
D1
D2
C15
470nF/36V
C16
470nF/36V
C11
100nF
C12
100nF
C13
100nF
C14
100nF
R7
47R
R8
47R
R9
47R
R10
47R
R11
75mR
R12
75mR
SA
SB
HA1
HA2
BMA1
BMA2
CA1
CA2
LA1
LA2
HB1
HB2
BMB1
BMB2
CB1
CB2
LB1
LB2
SRAH
SRAL
SRBH
SRBL
Released under the Creative Commons Attribution Share-Alike License. http://creativecommons.org/licenses/by-sa/4.0/
Designed by Stephan Watterott (Watterott electronic)
Based on the Trinamic TMC5160-BOB
OS HW
Watterott
www.watterott.com
SilentStepStick-TMC5160_v13
24.02.2019 11:33
Sheet: 1/1

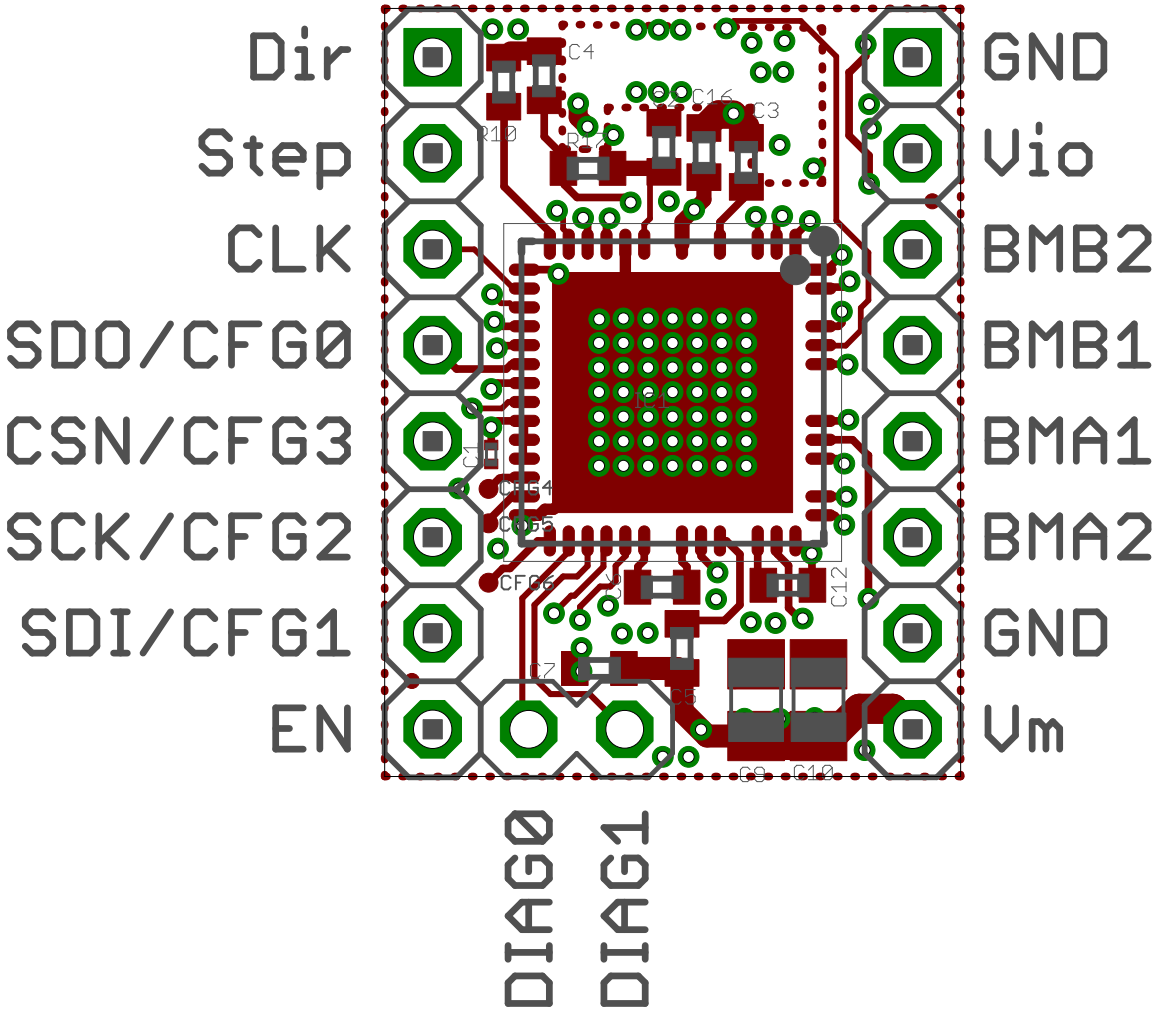
Dir
Step
CLK
SDO/CFG0
CSN/CFG3
SCK/CFG2
SDI/CFG1
EN
GND
Vio
BMB2
BMB1
BMA1
BMA2
GND
Vm
DIAG0
DIAG1

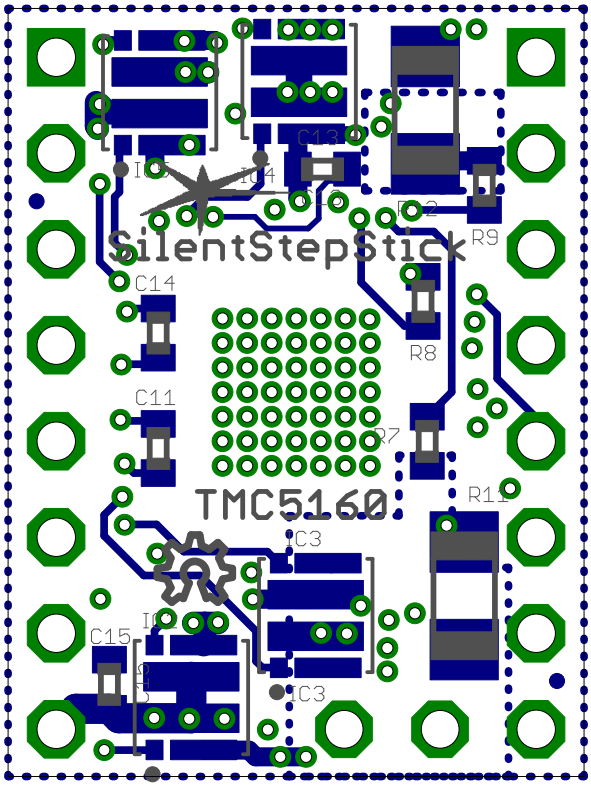
C13
IC5
IC4
R2
R9
SilentStepStick
C14
R8
C11
R7
TMC5160
R11
IC3
C15
IC3