ELECTRICAL DOCUMENTATION

Model : SUPER JOBBER *Elite* / 500 / XL / LM CNC

Control System : Fanuc Oi - TF

This page is intentionally left blank

SUPER JOBBER Elite / 500 / XL / LM CNC is supplied with the following features:

1) Fanuc 0i -TF CNC system
2) Fanuc β8 / 8000i Spindle motor
3) Fanuc β8 /3000 is Axes motors
4) Manual pulse generator
5) BTP-80, Bi-Directional, Electromechanical 8 station turret
6) Hydraulic Tailstock with Programmable Quill
7) Drain line oil cooler
8) Rapid rate 20 / 30 m/min
9) Spindle orientation
10) Rigid tapping
11) Three Colour M/C Status Lamp
12) Door interlock, Mechanical
13) Coolant System, RKM 120
14) Built-in Lighting system
15) AC unit for control cabinet, Panel Cooler

We are herewith furnishing electrical circuit drawings taking all options into account. Hence CUSTOMERS/MMT service engineers are requested to refer only those options which are supplied along with the machine.

NOTE: - Should you come across any discrepancies in this manual please let us know.

We have given M - code for Chuck ID/OD selection instead of selector switches. (Refer M - code list)

Plot No.7&8 II Phase Peenya Industrial Area
Bangalore-560 058. INDIA
Phone: +91-080-22186700, Fax: +91-80-22186723
CIN : U29199KA1986PLC007816
www.acemicromatic.net

Note on MATD-08/MATF-01 logic (effective from 01-10-2015)

1) No password required to view ladder

2) Alarm : 1095 ABS ENCODER NOT SET(P1815.5)
   Cause: P1815#5 is set to 0
   Remedy: Set P1815#5 to 1. Absolute position detector (absolute pulse coder)

3) Chuck clamp/declamp operation:
   Earlier logic: The chuck used to clamp/declamp by foot switch only after the completion of the earlier initiated action.
   Current logic: The chuck can be clamped/declamped by foot switch even if the earlier initiated action is not completed.

4) Turret feedback: The input addresses X0002.6 and X0002.7 are free for use.

5) Lifting function against gravity at emergency stop and power failure
   Direction of lifting can be defined M-codes and lifting distance to be entered in respective parameter.

M101	+X LIFT ENB M-CODE	P2373 = 0 to 500 µm
M102	-X LIFT ENB M-CODE	P2173 = 0 to 500 µm
M103	+Z LIFT ENB M-CODE	P2373 = 0 to 500 µm
M104	-Z LIFT ENB M-CODE	P2173 = 0 to 500 µm

6) Message: 2116 PRESS MACHINE RESET PB,
   After releasing emergency, press machine reset push button to switch on hydraulics

7) Door lock solenoid
   In jog mode door lock solenoid is activated by Spindle clockwise or counter clock push button and Spindle stop push button in jog mode. In Auto or MDI mode door solenoid is activated by cycle start signal and it can be deactivated only not in cycle running by pressing Door open/close pushbutton or executing M46 OR M30.

8) M02 code can be used for part count and restart the part program.

9) Power-on lubrication: Lubrication occurs only if the elapsed time is more than 30min since last lubrication

10) During M01/M00, amber lamp is on, to indicate machine in idle state.

11) Programmable periodic maintenance alarms are available and can be programmed according to customer's needs.

12) Combined M-codes are available for the following operations:

M48 Auto door open +T.S. Quill return

M49 Auto door close + T.S Quill forward

M48 Auto door open + Chuck Open (K8.0=1)

M49 Auto door + Chuck Close (K8.0=1)

M48 Auto door +T.S Quill Return + Chuck Open (K8.1 =1)

13) When door interlock is enabled, door has to be opened and closed at least once before every cycle start in auto continuous mode

14) When two hand cycle start is used, both cycle start push buttons have to be pressed within 0.5 sec duration; otherwise cycle will not start.

Revised 0ITD-06/MATD-07 logic (effective from 06-08-2012)

- **Turret unclamp override**: Whenever turret is unclamped to move axis in manual mode press Lube-1 inch push button and Jog Keys or Manual Pulse Generator.

(Effective from 02-04-2012)

- Machine Control Panel (MCP) and Operator Control Panel (OCP) are integrated as single Machine Operator Panel (MOP).
- Gray code rotary switches are used for Mode Selector, Feed override, Rapid override and Spindle speed override.
- Rapid override and MPG/Step feed functions are controlled in single rotary switch. In handle mode MPG/Step feed is controlled and in other mode Rapid feed is controlled.
- Program check and Machine lock are integrated as Program test.
- Turret index, Door Open/Close and Lub. inch switches keep pressing 500ms to actuate.
- T.S body actuation delay (2000ms) to Forward and Retract
- Alarm "TURRET UNCLAMPED, MOVE SAFE ZONE INDEX" occurs, move axis to safe zone in manual mode and Turret index
- Alarm" MOVE T.S. QUILL TO HOME POS." occurs if T.S Quill moves beyond forward proximity, Move T.S. Quill to home position.

Revised 0ITD-05/MATD-05 logic (effective from 26-05-2011)

- **3-tier tower lamp**: Machine state is indicated with green/amber/red color as given below:
  GREEN: Cycle running in auto/MDI (glows continuously)
  AMBER: Operator's message (glows continuously) and end of the cycle (blinks at 1 Hz)
  RED: CNC/PLC alarm (glows continuously)
- **Chip Conveyor**: After selecting auto mode, chip conveyor starts running after 5 sec. delay (fixed timer).
- **Chuck function completion**: A delay (timer no.40) can be introduced between chuck clamp/declamp pressure sw. actuation and M10/M11 finish to make sure physical movement of chuck jaws is complete.
- **Hyd. counter balance pressure monitoring (VTL series)**: Z-axis counter balance pressure is monitored using pressure switch (S258).

Modification On 0iTD-04/MATD-05/MATD-06 logic version

- **PMC TYPE**

- Programming tool is updated to Fanuc Ladder-III Version- 5.8
- PMC type changed to *0I-D PMC* for 0i-TD control system
- PMC type changed to *0I-D PMC/L* for 0i MATE -TD control system

- **Lubrication operation**

- Lubrication healthy conditions -ESP signal high, no low Lube oil level and No lub fault
- Automatic lubrication is initiated with POWER ON and not after every emergency release
- Automatic lubrication is initiated after every 25.6 minutes (Timer no 1= 1536000), If Lube inch Push button is pressed timer resets.
- If timer reaches preset value during Emergency condition, after emergency release lubrication is initiated.

- **Spindle**

When emergency PB is pressed, PSM contactor (K10) goes off only when the spindle stops or the preset time (TMRB50) is elapsed.

- **Machine idle trip**

- If any control switches on OCP/ MCP and foot switches are not operated or cycle is not running for more than 10 Minutes machine idle trip is applied. Machine goes in emergency mode, all auxiliary motors are off for power saving (Timer no 8 = 600000)
- This option is enabled by Default.
  K6.5=1 Enable
  K6.5=0 Disable

- **Turret**

1) When turret is indexed by T-code, in addition to comparing turret encoder feedback, the no. of stations through which the turret passes are also counted to avoid wrong tool selection.

2) After turret is indexed by T-code, the turret feedback is continuously monitored against the last T-code to detect turret encoder signal malfunctioning.

1. Homing logic modifications

Butt type homing

The Beta-is servomotors are fitted with absolute pulse coders with battery back up. During the first time commissioning or when the servo motor/coupling/belt is disturbed for maintenance or repair, then the home position needs to be re established. Refer the procedure mentioned below

- **Switch ON the CNC system**
- **Release emergency push button**
- **Command M-code M40. Alternatively make keep relay K9.7 – 1**
- **Now CNC system displays an alarm "000 Please turn OFF power"**
- **Switch OFF CNC & then switch ON**
- **Release emergency push button**
- **Now CNC system displays an alarm APC alarm "X axis need ZRN" & "Z axis need ZRN"**
- **Select ZRN mode & then press cycle start push button on MCP**
- **Now one of the axis (Depending upon K0.2) starts moving towards the dead stop at controlled feed rate & controlled torque to hit the dead stop & establishes the reference point. At the end of homing, the corresponding LED comes ON.**
- **After wards the other axis performs the Butt type homing. The end of butt type homing can be seen by the X & Z reference LED's & also by the arrow marks on the slide.**
- **Now CNC system once again displays an alarm "000 Please turn OFF power"**
- **Switch OFF CNC system & switch ON.**
- **Now the CNC is ready for operation.**

Following are the salient features of homing

- **During the day to day operations, the CNC can be made ON & the operations can be done with out homing.**
- **When the motor/coupling/belt is disturbed, it is mandatory to command M40, which prompts for Butt type referencing.**
- **If homing is done during normal conditions, homing takes place at 20m/min feed rate**
- **If it is required to home the axis every time when the CNC is ON, then make the keep relay K4.1 – 1. With this it is not possible to run the cycle with out homing.**

Note: - However this type of homing will not take care of the disturbed slide position & commanding M40 or making K9.7- 1 is a must in such events.

- **In the event of clutch trip condition, the keep relay K9.7 automatically becomes 1 & butt type referencing is a must once the clutch is engaged. The procedure for engaging the clutch is listed in the subsequent topics.**
- **Stroke check is effective always**
- **When ever the program control switches (Program check, Machine lock or Block delete) switches are operated, then the CNC displays an alarm "Program control switch operated, reset & home". To clear this alarm, normal homing is must.**

2. **It is possible to set the number of parts to be machined in the setting screen so that the system displays an alarm "Number of parts machined = Number of parts set" once the machined number of parts exceeds the set value.**

3. **The spindle M-codes will be finished with out waiting for spindle speed arrival/stop signal. The spindle speed is monitored continuously during feed mode.**

4. Clutch logic

- **In the event of clutch trip, following events take place**
    - **Corresponding clutch trip proximity switch comes ON**
    - **Corresponding axis servo goes OFF**
    - **Axes brakes to apply (When in Auto/MDI mode)**
    - **Reference of both X & Z axes goes OFF if they were ON**
    - **Correspondingly, Axes tripped alarm shall be displayed on the CRT**
    - **Feed hold will be created**
    - **CNC displays the alarm "000 Please turn OFF power"**

- **Find & eliminate the cause for clutch trip**
- **Select MDI mode & set the stroke limit of the tripped axes to 9999999 (P1320 for X & P1321 for Z axis)**
- **Select jog mode. Now the brakes of the built in motors will be released. The additional brake of the inclined axis (If any) remains applied.**
- **Jog the axis to safe zone for clutch engagement**
- **Press cycle start push button on the MCP to initiate the clutch engagement**
- **As long as the clutch engagement is in progress, the cycle start LED on the MCP remains ON.**
- **If both the clutches are tripped, then the X-axis engages first & then the Z-axis.**
- **When the cycle start LED goes OFF indicating the clutch completion of clutch engagement, switch OFF the machine to clear the "000 Turn OFF power" alarm**
- **The next CNC ON displays the alarm to initiate the Butt type reference. Refer point 1.**
- **After Butt type referencing is complete, select MDI mode & set the stroke limit to earlier value.**
- **Switch OFF CNC & then switch ON & continue the operation after ensuring the arrow marker on both the slides.**

Note: - For proper functioning of the above function, the setting of the clutch trip proximity should not be disturbed

5. **Turret safe zone is established through software**

6. **Program reset with the mode changeover from EDIT to AUTO continuous.**
After editing any program, when the mode is changed from EDIT mode to AUTO continuous mode, the program automatically gets reset. If there is a need to run the program in AUTO continuous mode from any other program blocks, it is required give one M-code (M62) in MDI mode.
Note: - If this safety feature is not at all required, then make the keep relay K3.0 – 1

7. **If constant surface speed G96 command (CSS) is not cancelled before tool changeover, an alarm "Cancel CSS before T command" will be displayed. It is provided to limit the abuse of the G96 command, which affects the duty cycle requirement of the spindle.**

8. **Foot switch working under optional stop**
Generally the foot switch for chuck & T.S. quill works during the optional stop condition. If this feature is not required, then make the keep relay K3.2 – 1.

9. **Energy saving feature & spindle speed / feed override clamping to 100% is introduced as optional feature**

10. **To prevent the slide lifting, PLC logic is modified so as to avoid auto lubrication when the auto cycle is ON. The auto lubrication comes ON only at the end of auto cycle. If the auto cycle continues beyond 10 minutes after the lubrication interval is over, then the lubrication comes ON even when the auto cycle is in progress.**
If the machine is with bar feeder, then the auto lubrication triggers when the chuck is de-clamped for component loading.
If the lubrication fault lamp comes ON when the auto cycle is in progress, the alarms related to lubrication comes ON only when the auto cycle is stopped. If the auto cycle continues beyond 10 minutes with out stopping, then the alarm displays & stops the auto cycle.

Machine Model : SUPER JOBBER ELITE / 500 / XL / LM CNC LATHE

SL. NO.	INDEX

1. M-code listing
2. Symbol & Comment
3. PLC Ladder Diagram
4. Cross Reference
5. Electrical Circuit Drawings

M-codes	
M00	Program stop
M01	Optional stop
M02	End of program
M03	Spindle rotation CW
M04	Spindle rotation CCW
M05	Spindle stop
M07	Coolant ON
M08	Coolant-2 ON
M09	Coolant OFF
M10	Chuck declamp
M11	Chuck clamp
M16	Chuck-ID select
M18	Chuck-OD select
M19	Spindle orientation
M20	Spindle orientation cancel
M27	Chuck-low pressure select
M28	Chuck-high pressure select
M29	Rigid tapping
M30	End of main program
M32	Tailstock quill forward
M33	Tailstock quill retract
M34	Parts catcher forward
M35	Parts catcher retract
M38	Air jet ON
M39	Air jet OFF
M41	Spindle-low gear select
M42	Spindle-high gear select
M44	Right Hand tapping
M45	Left Hand tapping
M46	Door open
M47	Door close
M48	Door open+quill retract+chuck declamp
M49	Door close+quill forward+chuck clamp
M50	Spindle lock
M51	Spindle Unlock
M60	Door interlock OFF
M61	Door interlock ON
M65	Bar feeder ON
M70	Foot switch active
M71	Foot switch inactive
M72	Spindle-low speed select
M73	Spindle-high speed select
M76	Steady rest-2 open
M77	Steady rest-2 hold
M78	Steady rest-1 open
M79	Steady rest-1 hold
M80	Bar change
M82	Tailstock body forward
M83	Tailstock body retract
M84	Touch probe arm forward
M85	Touch probe arm retract
M88	Bar feeder OFF
M89	Job seating confirmation
M93	Programmable Tailstock body macro call
M94	Bar feeder macro call
M98	Sub program call
M99	Sub program end
M101	+X Lift enable
M102	-X Lift enable
M103	+Z Lift enable
M104	-Z Lift enable

Note:The above indicated M-codes are applicable for specific machine model only.The above list may contain M-codes not applicable for your machine

1)	MACHINE TOOL BUILDER NAME	ACE DESIGNERS LIMITED
2)	MACHINE TOOL NAME	CNC LATHE
3)	PMC & NC NAME	0I-F PMC/L / 0I-TF CNC
4)	PMC PROGRAM NO.	MATF
5)	EDITION NO.	01
6)	PROGRAM DRAWING NO.	BASE LOGIC (0ITD-07)
7)	DATE OF PROGRAMMING	28-09-2015
8)	PROGRAM DESIGNED BY	P.V. RAJU
9)	ROM WRITTEN BY	P.V. RAJU
10)	REMARKS	STD LOGIC FOR 0I-TF

NO.	ADDRESS	SYMBOL	FIRST COMMENT
00001	X0000.0	CHCKFS	CHUCK CLAMP/DECLAMP F.S.
00002	X0000.1	CKOPPS	CHUCK OPEN PR.SW.
00003	X0000.2	CKCLPS	CHUCK CLOSE PR. SW.
00004	X0000.3	TQFRFS	T.S. QUILL FWD/RET F.S.
00005	X0000.4	TQFWPS	T.S. QUILL FWD PROX. SW.
00006	X0000.5	TQRTPS	T.S. QUILL HOME PROX. SW.
00007	X0000.6	LUBFSW	LUB. FLOAT SW.
00008	X0000.7	LUBPRS	LUB. PRESSURE SW.
00009	X0001.0	CHTHTP	CHIP CONVEYOR TH. TRIP
00010	X0001.1	TUCLPS	TURRET CLAMP PROX. SW.
00011	X0001.2	TUTHSW	TURRET MOTOR THERMAL CONTACT
00012	X0001.3	XCLTPS	X-CLUTCH TRIP PROX. SW.
00013	X0001.4	ZCLTPS	Z-CLUTCH TRIP PROX. SW.
00014	X0001.5	PSMRDY	PSM P.S. READY SIGNAL
00015	X0001.6	CHINPS	CHUCK IN PROX. SW.
00016	X0001.7	CHOTPS	CHUCK OUT PROX. SW.
00017	X0002.0	TUFB-1	TURRET BIN F/B-1
00018	X0002.1	TUFB-2	TURRET BIN F/B-2
00019	X0002.2	TUFB-4	TURRET BIN F/B - 4
00020	X0002.3	TUFB-8	TURRET BIN F/B - 8
00021	X0002.4	TFBSTR	TURRET F/B STROBE
00022	X0002.5	TFBPAR	TURRET F/B PARITY
00023	X0002.6		
00024	X0002.7		
00025	X0003.0	RST-PB	M/C RESET P.B.
00026	X0003.1	TINDPB	TURRET INDEX ON PB
00027	X0003.2	CLONOF	COOLANT ON/OFF PB.
00028	X0003.3	CYST-1	CYCLE START PB-1
00029	X0003.4	CHIP.F	CHIP CONVEYOR FWD SEL SW.
00030	X0003.5	CHIP.R	CHIP CONVEYOR REV SEL SW.
00031	X0003.6	LUBPB	LUB INCH PB
00032	X0003.7	DOORPB	DOOR OPEN/CLOSE PB
00033	X0004.0	XAE	PROBE SENSING SIGNAL ON
00034	X0004.1	ZAE	PROBE SENSING SIGNAL ON
00035	X0004.2	+M1T1	+X OFFSET WRITE SIGNAL
00036	X0004.3	-M1T1	-X OFFSET WRITE SIGNAL
00037	X0004.4	+M1T2	+Z OFFSET WRITE SIGNAL
00038	X0004.5	-M1T2	-Z OFFSET WRITE SIGNAL
00039	X0004.6	TPSGNL	T.P. SIGNAL
00040	X0004.7	SKIP	SKIP SIGNAL
00041	X0005.0	CYSTPB	CYCLE START PB
00042	X0005.1	FHLDPB	FEED HOLD PB
00043	X0005.2	SPCWPB	SPINDLE CW PB
00044	X0005.3	SPSTPB	SPINDLE STOP PB
00045	X0005.4	SPACPB	SPINDLE CCW PB
00046	X0005.5	SPOVR1	SPINDLE SPEED O/R - SPA
00047	X0005.6	SPOVR2	SPINDLE SPEED O/R - SPB
00048	X0005.7	SPOVR3	SPINDLE SPEED O/R - SPC
00049	X0006.0	MD1.M	MODE SELECT - MD1
00050	X0006.1	MD2.M	MODE SELECT - MD2
00051	X0006.2	MD4.M	MODE SELECT - MD4
00052	X0006.3		
00053	X0006.4		
00054	X0006.5	ROV\MP1.M	RAPID TRAVERSE O/R \ MPG- 1
00055	X0006.6	ROV\MP2.M	RAPID TRAVERSE O/R\MPG- 2
00056	X0006.7	PRGKEY	PROGRAM PROTECT SELECT
00057	X0007.0	FRO1.M	FEED O/R - 1
00058	X0007.1	FRO2.M	FEED O/R - 2
00059	X0007.2	FRO4.M	FEED O/R - 4
00060	X0007.3	FRO8.M	FEED O/R - 8
00061	X0007.4	+X.M	+X JOG PB
00062	X0007.5	-X.M	-X JOG PB
00063	X0007.6	+Z.M	+Z JOG PB
00064	X0007.7	-Z.M	-Z JOG PB
00065	X0008.0	CYST-2	CYCLE START PB - 2
00066	X0008.1	TBULPS	T.S. BODY UNCLAMP PR. SW.
00067	X0008.2	TBFWLS	T.S. BODY FWD L.S.
00068	X0008.3	TBHMLS	T.S. BODY HOME L.S.
00069	X0008.4	*ESP	EMERGENCY RELEASE SIGNAL
00070	X0008.5	TBFRFS	T.S. BODY FWD/RET FOOT SWITCH
00071	X0008.6	DROPLS	DOOR OPEN L.S.

NO.	ADDRESS	SYMBOL	FIRST COMMENT
00072	X0008.7	DRCLLS	DOOR CLOSE L.S.
00073	X0009.0		
00074	X0009.1		
00075	X0009.2	CBALPRSW	COUNTER BALANCE PR.SW.
00076	X0009.3		
00077	X0009.4	TPHMLS	TP ARM HOME L.S.
00078	X0009.5	TPFWLS	TP ARM FWD L.S.
00079	X0009.6	PCFWPR	PARTS CATCHER FWD PROX. SW.
00080	X0009.7	PCRTPR	PARTS CATCHER RET PROX. SW.
00081	X0010.0	RT.M	MANUAL RAPID TRAVERSE PB
00082	X0010.1		
00083	X0010.2		
00084	X0010.3	OPST.M	OPTIONAL STOP
00085	X0010.4	BDEL.M	BLOCK DELETE
00086	X0010.5	DRYN.M	DRY RUN
00087	X0010.6	PRGT.M	PROGRAM TEST
00088	X0010.7		
00089	X0011.0	EMGREL	EMG PB RELEASE SIGNAL
00090	X0011.1	HYDFLT	HYD. FLOAT SW. SIGNAL
00091	X0011.2	AIRPRS	AIR PRESSURE SWITCH
00092	X0011.3	A/CALM	A/C ALARM SIGNAL
00093	X0011.5	HYCLTH	HYD/COOL THERMAL RELAY
00094	X0011.6		
00095	X0011.7		
00096	X0015.0	DOALM0	DO ALARM-0
00097	X0015.1	DOALM1	DO ALARM-1
00098	X0015.2	DOALM2	DO ALARM-2
00099	X0015.3	DOALM3	DO ALARM-3
00100	X0015.4	DOALM4	DO ALARM-4
00101	X0015.5	DOALM5	DO ALARM-5
00102	X0015.6	DOALM6	DO ALARM-6
00103	X0015.7	DOALM7	DO ALARM-7
00104	Y0000.0	CHKOPN	CHUCK OPEN OUTPUT
00105	Y0000.1	CHKCLS	CHUCK CLOSE OUTPUT
00106	Y0000.2	TQFWSL	T.S. QUILL FWD O/P
00107	Y0000.3	TQRTSL	T.S. QUILL RET O/P
00108	Y0000.4	XZBRK	X & Z BRAKE RELEASE O/P
00109	Y0000.5	TOW1.L	END OF MACHINE LAMP O/P
00110	Y0000.6	TOW2.L	TOWER LAMP RED
00111	Y0000.7	TOW3.L	TOWER LAMP GREEN
00112	Y0001.0	+XOFST	+X OFFSET WRITE
00113	Y0001.1	-XOFST	-X OFFSET WRITE
00114	Y0001.2	+ZOFST	+Z OFFSET WRITE
00115	Y0001.3	-ZOFST	-Z OFFSET WRITE
00116	Y0001.4	TPOUT	T.P. O/P SIGNAL (X0004.0 I/P)
00117	Y0001.5		
00118	Y0001.6		
00119	Y0001.7		
00120	Y0002.0	HYDON	HYDRAULICS ON O/P
00121	Y0002.1	LUBON	LUBRICATION ON O/P
00122	Y0002.2	COOLON	COOLANT ON O/P
00123	Y0002.3	TURFWD	TURRET MOTOR FWD O/P
00124	Y0002.4	TURREV	TURRET MOTOR RET O/P
00125	Y0002.5	MCC_ON	PSM MCC ON O/P
00126	Y0002.6	CHIPFW	CHIP CONVEYOR FWD O/P
00127	Y0002.7	CHIPRE	CHIP CONVEYOR RET O/P
00128	Y0003.0	XREF.L	X REFERENCE LAMP
00129	Y0003.1	ZREF.L	Z REFERENCE LAMP
00130	Y0003.2	LFLT.L	LUB FAULT LAMP
00131	Y0003.3	CCLP.L	CHUCK CLAMP LAMP
00132	Y0003.4	CDLP.L	CHUCK DECLAMP LAMP
00133	Y0003.5		
00134	Y0003.6		
00135	Y0003.7		
00136	Y0004.0	DROPSL	DOOR OPEN O/P
00137	Y0004.1	DRCLSL	DOOR CLOSE O/P
00138	Y0004.2	EMGO/R	X & Z AXES EMG LS O/R O/P
00139	Y0004.3	DRLKSL	DOOR LOCK ON SOL.
00140	Y0004.4	PCFWSL	PARTS CATCHER FWD O/P
00141	Y0004.5	PCRTSL	PARTS CATCHER RET O/P
00142	Y0004.6		

NO.	ADDRESS	SYMBOL	FIRST COMMENT
00143	Y0004.7		
00144	Y0005.0	TBFWSL	TS BODY/PLUNGER(LT25) FWD O/P
00145	Y0005.1	TBRTSL	T.S. BODY RET O/P
00146	Y0005.2	TBUCSL	T.S. BODY UNCLAMP O/P
00147	Y0005.3	TPFWSL	T.P. ARM FWD O/P
00148	Y0005.4	TPRTSL	T.P. ARM RET O/P
00149	Y0005.5	XADBRK	X-AXIS ADDITIONAL BRAKE
00150	Y0005.6		
00151	Y0005.7		
00152	Y0006.0	CYST.L	CYCLE START LAMP
00153	Y0006.1	FHLD.L	FEED HOLD LAMP
00154	Y0006.2	SPCW.L	SPINDLE CW LAMP
00155	Y0006.3	SPAW.L	SPINDLE CCW(ANTI CW) LAMP
00156	Y0006.4		
00157	Y0006.5		
00158	Y0006.6		
00159	Y0006.7		
00160	Y0007.0		
00161	Y0007.1		
00162	Y0007.2		
00163	Y0007.3		
00164	Y0007.4		
00165	Y0007.5		
00166	Y0007.6		
00167	Y0007.7		
00168	F0000.0	RWD	REWINDING SIGNAL
00169	F0000.4	SPL	FEED HOLD LAMP SIGNAL
00170	F0000.5	STL	CYCLE START LAMP SIGNAL
00171	F0000.6	SA	SERVO READY SIGNAL
00172	F0001.0	NCALM	NC ALARM
00173	F0001.1	RST	RESET SIGNAL
00174	F0001.2	NCMSG	NC MESSAGE
00175	F0001.4	ENB	SPINDLE COMMAND ENB SIGNAL
00176	F0002.1	RPDO	RAPID FEED RATE SELECT
00177	F0003.0	MINC	INCREMENTAL FEED SELECT SIGNAL
00178	F0003.1	MH	MANUAL HANDLE FEED SIGNAL
00179	F0003.2	MJ	JOG FEED SELECT CHECK SIGNAL
00180	F0003.3	MMDI	MANUAL DATA INPUT SELECT
00181	F0003.5	MMEM	AUTOMATIC OPERATION SELECT
00182	F0003.6	MEDT	MEMORY EDIT SELECT SIGNAL
00183	F0004.5	REFSEL	REF MODE SELECTED
00184	F0007.0	MF	M-STROBE
00185	F0007.3	TF	T-STROBE SIGNAL
00186	F0009.4	DM30	M30 DECODE SIGNAL
00187	F0009.5	DM02	M02 DECODE SIGNAL
00188	F0009.6	DM01	M01 DECODE SIGNAL
00189	F0009.7	DM00	M00 DECODE SIGNAL
00190	F0026.0	T00	T-CODE - 1
00191	F0026.1	T01	T CODE - 2
00192	F0026.2	T02	T CODE - 4
00193	F0026.3	T03	T CODE - 8
00194	F0026.4	T04	T CODE - 16
00195	F0038.0	SCLP	SPINDLE CLAMP SIGNAL
00196	F0038.1	SUCLP	SPINDLE UNCLAMP SIGNAL
00197	F0045.0	ALMA	ALARM SIGNAL (SPINLDE)
00198	F0045.1	SSTA	SPINDLE SPEED ZERO SIGNAL
00199	F0045.2	SDTA	SPINDLE SPEED DETECT SIGNAL
00200	F0045.3	SARA	SPINDLE SPEED ARRIVAL SIGNAL
00201	F0045.4	LDT1A	LOAD DETECT SIGNAL
00202	F0045.7	ORARA	ORIENTATION COMPLETION SIGNAL
00203	F0046.2	RCHPA	POWER LINE SW. SIGNAL
00204	F0046.3	RCFNA	POWER LINE SW. COMPLETE SIGNAL
00205	F0054.0	UO000	MACRO O/P SIGNAL
00206	F0054.1	UO001	MACRO O/P SIGNAL
00207	F0054.2	UO002	MACRO O/P SIGNAL
00208	F0054.3	UO003	MACRO O/P SIGNAL
00209	F0054.4	UO004	MACRO O/P SIGNAL
00210	F0054.5	UO005	MACRO O/P SIGNAL
00211	F0062.7	PRTSF	PART COUNT FINISHED
00212	F0064.0	TLCH	TOOL GROUP WORN OUT
00213	F0064.3	TOOLWR	TOOL GETTING WEAR

NO.	ADDRESS	SYMBOL	FIRST COMMENT
00214	F0070.0	PSW01	TURRET SAFE ZONE BAND
00215	F0070.1	PSW02	X HOMING ZONE(AUTO REF)
00216	F0070.2	PSW03	Z HOMING ZONE(AUTO REF)
00217	F0070.3	PSW04	T.S. +VE LIM RANGE
00218	F0070.4	PSW05	T.S. -VE LIM RANGE
00219	F0076.3	RTAP	RIGID TAPPING ON ACKNOWLEDGE
00220	F0093.4	SVWRN1	
00221	F0093.5	SVWRN2	
00222	F0093.6	SVWRN3	
00223	F0093.7	SVWRN4	
00224	F0094.0	ZP1	X-REFERENCE SIGNAL
00225	F0094.1	ZP2	Z-REFERENCE SIGNAL
00226	F0094.2	ZP3	3RD AXIS REF COMPLETE
00227	F0102.0	MV1	X-AXIS MOVING SIGNAL
00228	F0102.1	MV2	Z-AXIS MOVING SIGNAL
00229	F0106.0	MVD1	X-AXIS MOVING DIRECTION SIGNAL
00230	F0106.1	MVD2	Z-AXIS MOVING DIRECTION SIGNAL
00231	F0264.0	SPWRN1	
00232	F0264.1	SPWRN2	
00233	F0264.2	SPWRN3	
00234	F0264.3	SPWRN4	
00235	F0264.4	SPWRN5	
00236	F0264.5	SPWRN6	
00237	F0264.6	SPWRN7	
00238	F0264.7	SPWRN8	
00239	F0265.0	SPWRN9	
00240	G0004.3	FIN	FINISH SIGNAL
00241	G0005.6	AFL	AUX FUNCTION LOCK SIGNAL
00242	G0007.1	STLK	START LOCK SIGNAL
00243	G0007.2	ST	CYCLE START SIGNAL
00244	G0008.4	*_ESP	EMERGENCY STOP SIGNAL
00245	G0008.5	*SP	FEED HOLD SIGNAL
00246	G0008.6	RRW	RESET & REWIND SIGNAL
00247	G0014.0	ROV1	RAPID TRAVERSE OVERRIDE - 1
00248	G0014.1	ROV2	RAPID TRAVERSE OVERRIDE - 2
00249	G0018.0	HS1A	MPG (X-AXIS) SELECT
00250	G0018.1	HS1B	MPG (Z-AXIS) SELECT
00251	G0019.4	MP1	MPG/STEP FEED SELECT - 1
00252	G0019.5	MP2	MPG/STEP FEED SELECT - 2
00253	G0019.7	RT	MANUAL RAPID JOG SIGNAL
00254	G0028.4	*SUCPF	SPINDLE UNCLAMP COMP SIGNAL
00255	G0028.5	*SCPF	SPINDLE CLAMP COMP SIGNAL
00256	G0028.6	SPSTP	SPINDLE STOP COMPLETE SIGNAL
00257	G0029.5	SOR	SPINDLE ORIENTATION SIGNAL
00258	G0029.6	*SSTP	SPINDLE STOP SIGNAL
00259	G0039.0	OFN0	TOOL OFFSET NUMBER - 0
00260	G0039.1	OFN1	TOOL OFFSET NUMBER - 2
00261	G0039.2	OFN2	TOOL OFFSET NUMBER - 2
00262	G0039.3	OFN3	TOOL OFFSET NUMBER - 3
00263	G0039.7	GOQSM	TOOL OFFSET WRITE MODE
00264	G0043.0	MD1	MODE SELECT - 1
00265	G0043.1	MD2	MODE SELECT - 2
00266	G0043.2	MD4	MODE SELECT - 4
00267	G0043.7	ZRN	ZERO RETURN SIGNAL
00268	G0044.0	BDT1	BLOCK SKIP SIGNAL
00269	G0044.1	MLK	M/C LOCK SIGNAL (ALL AXES)
00270	G0046.1	SBK	SINGLE BLOCK SIGNAL
00271	G0046.3	KEY1	MEMORY PROTECT SIGNAL
00272	G0046.7	DRN	DRY RUN SIHNAL
00273	G0061.0	RGTAP	RIGID TAPPING ON O/P
00274	G0061.4	RGTSP1	RIGID TAPPING SPINDLE-1 SELECT
00275	G0070.2	CTH2A	CLUTCH/GEAR SIGNAL-2
00276	G0070.3	CTH1A	CLUTCH/GEAR SIGNAL-1
00277	G0070.4	SRVA	SPINDLE CCW COMMAND SIGNAL
00278	G0070.5	SFRA	SPINDLE CW COMMAND SIGNAL
00279	G0070.6	ORCMA	SPINDLE ORIENTATION COMMAND
00280	G0070.7	MRDYA	MACHINE READY (SPINDLE)
00281	G0071.0	ARSTA	ALARM RESET SIGNAL (SPINDLE)
00282	G0071.1	*ESPA	EMG STOP SIGNAL (SPINDLE)
00283	G0071.6	RSLA	SPEED RANGE SW. REQUEST
00284	G0071.7	RCHA	LOW-SPEED MAG. CONTACT

NO.	ADDRESS	SYMBOL	FIRST COMMENT
00285	G0072.7		
00286	G0100.0	+J1	+X JOG SIGNAL
00287	G0100.1	+J2	+Z JOG SIGNAL
00288	G0102.0	-J1	-X JOG SIGNAL
00289	G0102.1	-J2	-Z JOG SIGNAL
00290	G0126.0	SVF1	X - SERVO OFF SIGNAL
00291	G0126.1	SVF2	Z-SERVO OFF SIGNAL
00292	G0130.0	*IT1	INTERLOCK SIGNAL FOR X AXIS
00293	G0130.1	*IT2	INTERLOCK SIGNAL FOR Z AXIS
00294	G0130.2	*IT3	INTERLOCK SIGNAL FOR 3RD AXIS
00295	G0130.3	*IT4	INTERLOCK SIGNAL FOR4TH AXIS
00296	G0323.0	SWDBS1	SWDBS1
00297	G0323.1	SWDBS2	SWDBS2
00298	R0500.0	U01PUL	MACRO OUTPUT I PULSE RELAY
00299	R0500.1	U02PUL	MACRO O/P 1 PULSE RELAY
00300	R0500.2	U03PUL	MACRO OUTPUT I PULSE RELAY
00301	R0500.3	U04PUL	MACRO OUTPUT I PULSE RELAY
00302	R0500.4	U05PUL	MACRO OUTPUT I PULSE RELAY
00303	R0500.5	U06PUL	MACRO OUTPUT I PULSE RELAY
00304	R0501.0	U01REL	RELAY FOR 1 PULSE
00305	R0501.1	U02REL	RELAY FOR 1 PULSE
00306	R0501.2	U03REL	RELAY FOR 1 PULSE
00307	R0501.3	U04REL	RELAY FOR 1 PULSE
00308	R0501.4	U05REL	RELAY FOR 1 PULSE
00309	R0501.5	U06REL	RELAY FOR 1 PULSE
00310	R0502.0	T01WRN	TOOL 1 WORNOUT RELAY
00311	R0502.1	T02WRN	TOOL 2 WORNOUT RELAY
00312	R0502.2	T03WRN	TOOL 3 WORNOUT RELAY
00313	R0502.3	T04WRN	TOOL 4 WORNOUT RELAY
00314	R0502.4	T05WRN	TOOL 5 WORNOUT RELAY
00315	R0502.5	T06WRN	TOOL 6 WORNOUT RELAY
00316	R0502.6	T07WRN	TOOL 7 WORNOUT RELAY
00317	R0502.7	T08WRN	TOOL 8 WORNOUT RELAY
00318	R0503.0	T09WRN	TOOL 9 WORNOUT RELAY
00319	R0503.1	T10WRN	TOOL 10 WORNOUT RELAY
00320	R0503.2	T11WRN	TOOL 11 WORNOUT RELAY
00321	R0503.3	T12WRN	TOOL 12 WORNOUT RELAY
00322	R0503.4	TLFHLD	TOOL WORNOUT,FEED HOLD
00323	R0503.5	TLALDL	TOOL LIFE ALARM DELAY
00324	R0592.0		ADD ERROR
00325	R0592.1		ADD ERROR
00326	R0592.2		ADD ERORR
00327	R0592.3		ADD ERROR
00328	R0592.4		WINDOW READ ERROR
00329	R0592.5		RESERVED
00330	R0592.6	THNDIS	TWO-HAND CYCLE START DISABLE
00331	R0592.7	NXTSTL	NEXT CYCLE ENABLE RELAY
00332	R0593.0		RESERVED
00333	R0593.1		RESERVED
00334	R0600.0	LOGIC1	LOGIC HIGH
00335	R0600.1	AU/MDI	AUTO/MDI MODE SELECT RELAY
00336	R0600.2	MAN.M	MANUAL MODE
00337	R0601.0	XZRC	X & Z REFERENCE COMPLETE
00338	R0601.1	AURDY	AUTO READY
00339	R0601.2	M0/M01	M00/M01 SELECT
00340	R0601.3	2HDCYC	2 HAND CYCLE START
00341	R0601.4	RESET	RESET RELAY
00342	R0601.6	PCSS	PROGRAM CONTROL SWITCH SELECT
00343	R0601.7	M0FIN	M00/M01/M02/M30 FIN
00344	R0602.0	X+RINI	X+ REF INITIATE
00345	R0602.1	X-RINI	X- REF INITIATE
00346	R0602.2	Z+RINI	Z+ REF INITIATE
00347	R0602.3	Z-RINI	Z- REF INITIATE
00348	R0602.4	X-HHLD	X-HOME HOLD
00349	R0602.5	Z-HHLD	Z-HOME HOLD
00350	R0602.6	EMGOFF	EMG. OFF DELAY
00351	R0602.7	FEDHLD	FEED HOLD INITIATE
00352	R0603.0	TINS	TURRET INDEX START
00353	R0603.1	TUR_OK	TURRET INITIAL CONDITIONS OK
00354	R0603.2	TC>T12	TOOL COMMAND > 12
00355	R0603.3	TC>T08	TOOL COMMAND > 8

NO.	ADDRESS	SYMBOL	FIRST COMMENT
00356	R0603.4	JOGIND	JOG INDEX START
00357	R0603.5	JUCLPH	JOG INDEX UNCLAMP HOLD
00358	R0603.6	JCLPH	JOG INDEX CLAMP HOLD
00359	R0603.7	JINCOM	TURRET JOG INDEX COMPLETE
00360	R0604.0	TICOM	TURRET INDEX COMPLETE
00361	R0604.1	TCLHLD	TURRET CLAMP HOLD
00362	R0604.2	TUNHLD	TURRET UNCLAMP HOLD
00363	R0604.3	CIO	COINCIDENCE RELAY
00364	R0604.4	TF/RHD	TURRET FWD/REV HOLD
00365	R0604.5	TCOMHD	TURRET INDEX COMPLETE HOLD
00366	R0604.6	T0/MCH	T00 / SAME TOOL
00367	R0604.7	TFIN	TFIN DELAY
00368	R0605.0	RFCHDL	REF DIR CHANGE DELAY
00369	R0605.2	XZSAFE	TURRET IN SAFE ZONE
00370	R0605.3	1PLCNC	1 PULSE WITH CNC ON
00371	R0605.4	PLRCNC	PULSE RELAY WITH CNC ON
00372	R0605.5	PGRST1	PROGRAM RESET W/O RWD SIGNAL
00373	R0605.6	PGRST2	SIGNAL TO REVOKE PRG.RWD
00374	R0605.7	M3/4FN	M03/M04/M05 FIN
00375	R0606.0		RESERVED
00376	R0606.1		RESERVED
00377	R0606.2	TQFWFL	T.S. QUILL FWD FLAG - 1
00378	R0606.3	TQRTFL	T.S. QUILL RET FLAG - 1
00379	R0606.4	QUMISS	T.S. QUILL NOT IN HOME POS
00380	R0606.5	RSTHLD	RESET HOLD FOR EOM LAMP
00381	R0606.6		RESERVED
00382	R0606.7		RESERVED
00383	R0607.0	EDIT.M	EDIT MODE SELECT
00384	R0607.1	ASBK.M	AUTO SINGLE BLOCK SELECT
00385	R0607.2	AUTO.M	AUTO CONTINUOUS SELECT
00386	R0607.3	MDI.M	MDI MODE SELECT
00387	R0607.4	STEPX.M	STEP(MPG) - X SELECT
00388	R0607.5	STEPZ.M	STEP(MPG) - Z SELECT
00389	R0607.6	JOG.M	JOG MODE SELECT
00390	R0607.7	ZRN.M	ZERO RETURN SELECT
00391	R0609.0	SPNCTR	SPINDLE ON COUNTER
00392	R0609.1	SPNHTY	SPINDLE HEALTHY
00393	R0609.2		
00394	R0609.5	SORCOM	SPINDLE ORIENTATION COMPLETE
00395	R0609.6	PSPRST	PULSE SP RST DOOR OPEN
00396	R0609.7	SPRST	SP RESET DOOR OPEN
00397	R0610.0	M8HOLD	M08 HOLD RELAY
00398	R0610.1	JOGCOL2	COOLANT-2 ENABLE IN JOG MODE
00399	R0610.2	PRTCOM	PARTS CATCHER FUNCTION COMP
00400	R0610.3	CLONR	COOLANT ON RELAY
00401	R0610.4	LUCNON	LUB MOTOR/PR SW CONT ON RELAY
00402	R0610.5	M7HOLD	M07 HOLD
00403	R0610.6	JGCLNT	COOLANT ENABLE IN MANUAL MODE
00404	R0610.7	LBLORL	LUB PR. LOW RELAY
00405	R0611.0	LUBHLT	LUBRICATION HEALTHY RELAY
00406	R0611.1		RESERVED
00407	R0611.2	PLPON	PULSE RELAY FOR POWER ON
00408	R0611.3	1PLUPB	1 PULSE WITH LUB INCH PB
00409	R0611.4	PLLUPB	PULSE RELAY FOR LUB PB
00410	R0611.5	1PLUIN	1 PULSE WITH LUB INITIATE
00411	R0611.6	PLLUIN	PULSE RELAY WITH LUB INTERVAL
00412	R0611.7	LUPRON	LUB ON WITH PR. SENSING
00413	R0612.0	TQHLTY	T.S. QUILL HEALTHY
00414	R0612.1	TQACT1	T.S. QUILL ACTUATION - 1
00415	R0612.2	TQACT2	T.S. QUILL ACTUATION - 2
00416	R0612.7	LUONRL	LUB ON RELAY
00417	R0613.0	TSQCOM	T.S. QUILL FUNCTION COMP
00418	R0613.3	REVDLY	CONVEYOR REV DELAY RELAY
00419	R0613.4	CPONDL	CONVEYOR ON DELAY
00420	R0613.5	CHIPON	CHIP CONVEYOR ON RELAY
00421	R0613.6	CPOFDL	CONVEYOR OFF DELAY RELAY
00422	R0613.7	CIONDL	CHIP CONVEYOR INITIAL DLY
00423	R0614.2	CHMFIN	CHUCK FUNCTION FIN
00424	R0614.3	MFIN	COMBINE MFIN RELAY
00425	R0614.4		RESERVED
00426	R0614.5		RESERVED

NO.	ADDRESS	SYMBOL	FIRST COMMENT
00427	R0615.0	CHKHLT	CHUCK HEALTHY
00428	R0615.1	CKACT1	CHUCK ACTUATION - 1
00429	R0615.2	CKACT2	CHUCK ACTUATION - 2
00430	R0615.3		RESERVED
00431	R0615.6	CKO/R	CHUCK SIGNAL O/R ON
00432	R0615.7	CKONDL	CHUCK SOL. ON DELAY
00433	R0616.1		RESERVED
00434	R0616.2	CCLPID	CHUCK CLAMP ID
00435	R0616.3	CDLPID	CHUCK DECLAMP ID
00436	R0616.4	CCLPOD	CHUCK CLAMP OD
00437	R0616.5	CDLPOD	CHUCK DECLAMP OD
00438	R0616.6	CKCOM1	CHUCK FUN COMPLETE - 1
00439	R0616.7	CKCOM2	CHUCK FUN COMPLETE - 2
00440	R0617.2	DRACT1	DOOR OPEN RELAY
00441	R0617.3	DRACT2	DOOR CLOSE RELAY
00442	R0617.4	DROPEN	DOOR OPEN RELAY
00443	R0617.5	DRCLOS	DOOR CLOSE RELAY
00444	R0617.6	DRCOM	DOOR FUNCTION COMPLETE
00445	R0618.0	TFBIN1	TURRET BIN F/B - 1
00446	R0618.1	TFBIN2	TURRET BIN F/B - 2
00447	R0618.2	TFBIN4	TURRET BIN F/B - 4
00448	R0618.3	TFBIN8	TURRET BIN F/B - 8
00449	R0618.4		RESERVED
00450	R0618.5		RESERVED
00451	R0618.6		RESERVED
00452	R0618.7		RESERVED
00453	R0619.0	ACTDL	ACTUATION DELY
00454	R0620.0	PWSAV1	POWER SAVE INITIATE -1
00455	R0620.1	PWSAV2	POWER SAVE INITIATE -2
00456	R0620.2	DOOR+CHUCK1	DOOR+CHUCK CLOSE
00457	R0620.3	DOOR+CHUCK2	DOOR+CHUCK OPEN
00458	R0620.4	DOOR+QUILL1	DOOR CLOSE+QUILL FWD
00459	R0620.5	DOOR+QUILL2	DOOR OPEN+QUILL RET
00460	R0620.6	DOOR+CHUCK+QUILL	DOOR OPEN CHUCK DLP QUILL RET
00461	R0620.7	DOOROP	DOOR OPEN M48
00462	R0621.0	TCBIN1	TOOL COMMAND BIN-1
00463	R0621.1	TCBIN2	TOOL COMMAND BIN-2
00464	R0621.2	TCBIN4	TOOL COMMAND BIN-4
00465	R0621.3	TCBIN8	TOOL COMMAND BIN-8
00466	R0621.4	TCSRTB	TOOL COMMAND STROBE
00467	R0621.5	TCPRTY	TOOL COMMAND PARITY
00468	R0621.6		RESERVED
00469	R0621.7	T-HOME	RESERVED
00470	R0622.2	SPINI	SHORTEST PATH INITIATE
00471	R0622.3	SPATH1	SHORTER PATH (12 STATION)
00472	R0622.4	SPATH2	SHORTER PATH (8 STATION)
00473	R0622.5	TINDST	TOOL INDEX START
00474	R0624.0	SSARDL	SAR DELAY (ON TIME MONITOR)
00475	R0625.0	TBHLTY	T.S. BODY HEALTHY
00476	R0625.1	TBFWD1	T.S. BODY FWD ACTUATION - 1
00477	R0625.2	TBFWD2	T.S. BODY FWD ACTUATION - 2
00478	R0625.3	TBRET1	T.S. BODY RET ACTUATION - 1
00479	R0625.4	TBCND1	T.S. BODY FWD CONDITION
00480	R0625.5	TBCND2	T.S. BODY RET CONDITION
00481	R0625.6	TBPOS	T.S. BODY POSITION REACHED
00482	R0625.7	TBCOM	T.S. BODY FUNCTION COMPLETE
00483	R0626.0	TBCHLD	T.S. BODY FUNCTION COMP HOLD
00484	R0626.1	TBUFLT	T.S. BODY UNCLAMP FAULT
00485	R0626.6	SRVA1	SPINDLE CW ENABLE RELAY
00486	R0626.7	SFRA1	SPINDLE ENABLE CCW RELAY
00487	R0627.0	CCRVIN	CONVEYOR REV INCH INHIBIT
00488	R0627.1	CCRVST	CC REVERSE START
00489	R0627.2	CCTRTM	COVEYOR TRIP TIME COUNT
00490	R0627.3	CCFRST	CONVEYOR FWD-REV STOP DELAY
00491	R0627.4	CCTRP3	CONVEYOR TRIP 3 TIMES IN 1 MIN
00492	R0628.0	+XOFRL	+X OFFSET WRITE RELAY
00493	R0628.1	-XOFRL	-X OFFSET WRITE RELAY
00494	R0628.2	+ZOFRL	+Z OFFSET WRITE RELAY
00495	R0628.3	-ZOFRL	-Z OFFSET WRITE RELAY
00496	R0628.4	TLRFHD	TOOL PROBE COMPLETE
00497	R0628.5	TLPRB1	TOOL PROBING INCOMPLETE RELAY

NO.	ADDRESS	SYMBOL	FIRST COMMENT
00498	R0629.0	1S-DLY	1 SECOND DELAY RELAY
00499	R0629.1	DLY-1S	1 SECOND DELAY RELAY
00500	R0629.2	XZHMDL	X & Z HOME DELAY
00501	R0629.7	DOALM	DO ALARM RELAY
00502	R0630.0	SARDLY	SPINDLE SPEED ARRIVAL DELAY
00503	R0630.1	LDTDLY	LOAD DETECT SIGNAL DELAY RELAY
00504	R0630.4	EOMF	END OF MACHINE RELAY
00505	R0630.5	FLON	FLASHER ON RELAY
00506	R0630.6	FLOF	FLASHER OFF RELAY
00507	R0630.7	RDNXT	READY FOR NEXT CYCLE
00508	R0631.0	BDTCYN	CYCLE ON WITH BLOCK DELETE
00509	R0631.1	PCKCYN	CYCLE ON WITH PROGRAM CHECK
00510	R0631.2		
00511	R0631.3	PSWOFF	BDT/PRG CHK/M_LOCK OFF
00512	R0631.4	RLEDOF	CANCEL REF LED'S
00513	R0631.5	RE-REF	MACHINE RE-REFERENCED
00514	R0631.6	NOTHOM	SLIDES NOT IN HOME POSITION
00515	R0632.0	+XLACH	+X KEY LATCH
00516	R0632.1	-XLACH	-X KEY LATCH
00517	R0632.2	+ZLACH	+Z KEY LATCH
00518	R0632.3	-ZLACH	-Z KEY LATCH
00519	R0632.4	+XITLK	+X OFFSET INTERLOCK
00520	R0632.5	-XITLK	-X OFFSET INTERLOCK
00521	R0632.6	+ZITLK	+Z OFFSET INTERLOCK
00522	R0632.7	-ZITLK	-Z OFFSET INTERLOCK
00523	R0633.3	TPAROK	TOUCH PROBE ARM OK
00524	R0633.4	TPINPO	TOUCH PROBE ARM IN POSITION
00525	R0633.5	TPFAIL	TOUCH PROBE ARM ACTUATION FAIL
00526	R0633.6	TPBYP1	TOUCH PROBE I/L BYPASS - 1
00527	R0633.7	TPMFIN	TOUCH PROBE M-FIN
00528	R0635.0	TS-AXS	AXIS/T.S. BODY ALIGNED
00529	R0635.1	TSBHLT	T.S. BODY HEALTHY(LT-25)
00530	R0635.2	TSSVOF	T.S. OPRN LT25 (SERVO OFF)
00531	R0635.3	TBUNDL	T.S. BODY UNCLAMP DELAY
00532	R0635.4	TSPLOF	TS BODY PLUNGER OFF DELAY
00533	R0635.5	TSFIN	TS BODY FUNCTION FIN (LT25)
00534	R0635.6	FSACT	FOOT SWITCH ACTIVE RELAY
00535	R0635.7	FSFIN	FS ACTIVE/INACTIVE M-FIN
00536	R0639.0	ZCLENG	Z CLUTCH ENGAGE IN PROGRESS
00537	R0639.1	ZCLCMP	Z CLUTCH ENGEGE COMPLETE
00538	R0640.0	XCLENG	X-AXIS CLUTCH ENGG IN PROGRESS
00539	R0640.1	XCLCMP	X CLUTCH ENGAGE COMPLETE
00540	R0643.0	EDTSEL	EDIT MODE SELECTED
00541	R0643.1	EDTAUT	EDIT MODE TO AUTO MODE SEL
00542	R0643.2	M62LCH	M62 LATCH
00543	R0643.7		NO MESSAGE
00544	R0644.0	NOMSG1	NO MESSAGE-1
00545	R0644.1	NOMSG2	NO MESSAGE-2
00546	R0644.2	NOMSG3	NO MESSAGE-3
00547	R0644.3	NOMSG4	NO MESSAGE-4
00548	R0644.4	NOMSG5	NO MESSAGE-5
00549	R0644.5	NOMSG6	NO MESSAGE-6
00550	R0644.6	NOMSG7	NO MESSAGE-7
00551	R0644.7	AMBRL	AMBER LAMP ON MESSAGE
00552	R0645.0	AIRRLY	AIR PRESSURE LOW RELAY
00553	R0646.0	CY_REL	CYCLE START RELAY
00554	R0647.0	AUSTHL	AUTO CYCLE START HOLD
00555	R0649.0	WINDOW_READ	WINDOW_READ
00556	R0649.1	1MIN_PULSE	1MIN_PULSE
00557	R0649.2		
00558	R0649.3	POWERUP_PULSE	POWERUP_PULSE
00559	R0650.0	CLFD1	CLAMP FEEDRATE-1
00560	R0650.1	CLFD2	CLAMP FEEDRATE-2
00561	R0650.2	CLFD4	CLAMP FEEDRATE-4
00562	R0650.3	CLFD8	CLAMP FEEDRATE-8
00563	R0650.4		RESERVED FOR FEEDRATE O/R
00564	R0650.5		RESERVED FOR FEEDRATE O/R
00565	R0650.6		RESERVED FOR FEEDRATE O/R
00566	R0650.7		RESERVED FOR FEEDRATE O/R
00567	R0651.0	CLFD	FEED RATE O/R CLAMP FLAG
00568	R0651.2		

NO.	ADDRESS	SYMBOL	FIRST COMMENT
00569	R0651.3		
00570	R0651.4		
00571	R0651.5		
00572	R0652.0	SPOVCL	SPINDLE OVERRIDE CLAMP FLAG
00573	R0652.1		
00574	R0652.3		
00575	R0652.4	LUBEON_PWRUP	LUBEON_PWRUP
00576	R0653.0	M29FIN	M29 FINISH DELAY RELAY
00577	R0653.1	RGTCAN	RIGID TAPPING MODE CANCEL FLAG
00578	R0656.0	RHTAP	RH TAPPING SELECTION
00579	R0656.1	LHTAP	LH TAPPING SELECTION
00580	R0665.0	1PLXPB	1 PULSE WITH X+/HOME PB
00581	R0665.1	PLRXPB	PULSE RELAY WITH X+/HOME PB
00582	R0665.2	1PLZPB	1 PULSE WITH Z+/HOME PB
00583	R0665.3	PLRZPB	PULSE RELAY WITH Z+/HOME PB
00584	R0665.4	XHMSTL	X HOME START LATCH
00585	R0665.5	ZHMSTL	Z HOME START LATCH
00586	R0665.6	XSFREL	X IN SAFE ZONE FOR HOMING
00587	R0665.7	ZSFREL	Z IN SAFE ZONE FOR HOMING
00588	R0666.0	XHMDLR	X HOME START DELAY RELAY
00589	R0666.1	ZHMDLR	Z HOME START DELAY RELAY
00590	R0667.0	LBWTDL	LUB FAULT WATCH DOG DELAY
00591	R0667.1	LOWTDL	LUB ON RELAY WATCH DOG DELAY
00592	R0668.0		RESERVED
00593	R0668.1		RESERVED
00594	R0670.0	1PLXRF	1 PULSE WITH X-REF INI
00595	R0670.1	PLRXRF	PLR FOR X REF INITIAT
00596	R0670.2	XRFINI	X REF INITIATE
00597	R0670.3	1PLZRF	1 PL WITH Z REF INI
00598	R0670.4	PLRZRF	PLR FOR Z REF INI
00599	R0670.5	ZRFINI	Z REF INITIATE
00600	R0670.6	CCTHM1	RELAY TO INITIATE BUTT HOM-1
00601	R0670.7	HMINRF	RELAY TO INITIATE BUTT HOM-2
00602	R0671.0	1PLK97	1 PL WITH K9.7
00603	R0671.1	PLRKP7	PLR FOR K9.7
00604	R0671.2	DIRDLY	AXES DIR CHANGE DLY RLY
00605	R0671.3	1PLXCL	1 PL WITH X CLT TRIP
00606	R0671.4	1PLZCL	1 PL WITH Z CLT TRIP
00607	R0672.0	ROV\MP1.RL	RAPID TRAVERSE O/R \ MPG- 1 RL
00608	R0672.1	ROV\MP2.RL	RAPID TRAVERSE O/R \ MPG- 2 RL
00609	R0672.3	VTL	VTL MCP AND COUNTER BALANCE
00610	R0672.4	1PCLON	1PULSE COOLANT ON
00611	R0672.5	PCLON	PULSE COOLANT ON
00612	R0672.6	CLONL	COOLANT ON LATCH
00613	R0672.7	PLCLOF	PULSE COOLANT OFF
00614	R0673.4	DLYFR	DELY FOR FWD/RET
00615	R0673.6	LUBPON	LUBE ON WITH POWER ON
00616	R0692.0		ADD ERROR
00617	R0692.1		ADD ERROR
00618	R0692.2		ADD ERROR
00619	R0692.3		ADD ERROR
00620	R0692.4		ADD ERROR
00621	R0692.5		WINDOW WRITE ERROR
00622	R0700.0	DM03	SPINDLE CW ENABLE M-CODE
00623	R0700.1	DM04	SPINDLE CCW ENABLE M-CODE
00624	R0700.2	DM05	SPINDLE DISABLE M-CODE
00625	R0700.4	DM07	COOLANT ON M-CODE
00626	R0700.5	DM08	COOLANT-2 ON M-CODE
00627	R0700.6	DM09	COOLANT OFF M-CODE
00628	R0700.7	DM10	CHUCK DECLAMP M-CODE
00629	R0701.0	DM11	CHUCK CLAMP M-CODE
00630	R0701.5	DM16	ID CLAMP SELECTION M-CODE
00631	R0701.7	DM18	OD CLAMP SELECTION M-CODE
00632	R0702.0	DM19	SPINDLE ORIENTATION M-CODE
00633	R0702.1	DM20	M19 DISABLE
00634	R0703.2	DM29	RIGID TAPPING MODE ON M-CODE
00635	R0703.5	DM32	T.S. QUILL FWD M-CODE
00636	R0703.6	DM33	T.S. QUILL RET M-CODE
00637	R0703.7	DM34	PARTS CATCHER FWD M-CODE
00638	R0704.0	DM35	PARTS CATCHER RET M-CODE
00639	R0704.5	DM40	BUTT HOME INI M-CODE

NO.	ADDRESS	SYMBOL	FIRST COMMENT
00640	R0705.1	DM44	LH TAPPING M-CODE
00641	R0705.2	DM45	RH TAPPING M-CODE
00642	R0705.3	DM46	DOOR OPEN M-CODE
00643	R0705.4	DM47	DOOR CLOSE M-CODE
00644	R0705.5	DM48	DOROPN+QUILRET+CHUCKDCLP M-COD
00645	R0705.6	DM49	DOOR+QUILL+CHUCK M-CODE
00646	R0706.4	DM55	CHUCK SIGNAL O/R ON M-CODE
00647	R0706.5	DM56	T.S. QUILL I/L ON FOR CY START
00648	R0706.6	DM57	T.S. QUILL I/L OFF FOR CY STRT
00649	R0707.1	DM60	DOOR I/L OFF M-CODE
00650	R0707.2	DM61	DOOR I/L ON M-CODE
00651	R0707.3	DM62	EDT-AUT RESET O/R M-CODE
00652	R0708.3	DM70	FOOT SWITCH ACTIVE M-CODE
00653	R0708.4	DM71	FOOT SWITCH INACTIVE M-CODE
00654	R0708.5	DM72	
00655	R0708.6	DM73	
00656	R0708.7	DM74	
00657	R0709.0	DM75	
00658	R0709.1	DM76	
00659	R0709.2	DM77	
00660	R0709.3	DM78	
00661	R0709.4	DM79	
00662	R0709.5	DM80	
00663	R0709.6	DM81	
00664	R0709.7	DM82	T.S. BODY FWD/UNCLAMP M-CODE
00665	R0710.0	DM83	T.S. BODY RETRACT/CLAMP M-CODE
00666	R0710.1	DM84	T.P. ARM FWD M-CODE
00667	R0710.2	DM85	T.P. ARM RET M-CODE
00668	R0710.3	DM86	T.P. INTERLOCK BYPASS M-CODE
00669	R0712.0	FOVR-1	FEED OVERRIDE 1 SELECT
00670	R0712.1	FOVR-2	FEED OVERRIDE 2 SELECT
00671	R0712.2	FOVR4	FEED OVERRIDE 4 SELECT
00672	R0712.3	FOVR8	FEED OVERRIDE 8 SELECT
00673	R0712.4		RESERVED
00674	R0712.5		RSERVED
00675	R0712.6		RESERVED
00676	R0712.7		RSERVED
00677	R0713.0	CNVERR	CONVERSION ERROR
00678	R0713.1	CODER2	CONVERSION ERROR
00679	R0713.2	CODER3	CONVERSION ERROR
00680	R0713.3	CODER4	CONVERSION ERROR
00681	R0713.4	RST1SC	RESET ON FOR 1 PLC SCAN
00682	R0713.5	RSTLCH	RESET HOLD RELAY
00683	R0714.0	SPO/R1	SPINDLE OVERRIDE SPA
00684	R0714.1	SPO/R2	SPINDLE OVERRIDE SPB
00685	R0714.2	SPO/R3	SPINDLE OVERRIDE SPC
00686	R0714.3		RESERVED
00687	R0714.4		RESERVED
00688	R0714.5		RESERVED
00689	R0714.6		RESERVED
00690	R0714.7		RESERVED
00691	R0715.0		
00692	R0715.1		
00693	R0715.2		
00694	R0719.0		RESERVED
00695	R0719.1		RESERVED
00696	R0719.2		RESERVED
00697	R0719.3		RESERVED
00698	R0719.4		RESERVED
00699	R0719.5		RESERVED
00700	R0719.6		RESERVED
00701	R0719.7		RESERVED
00702	R0723.6		RESERVED
00703	R0723.7		RESERVED
00704	R0752.3		RESERVE
00705	R0758.0		RESERVE
00706	R0758.1		RESERVE
00707	R0758.2		RESERVE
00708	R0758.3		RESERVE
00709	R0758.4		RESERVE
00710	R0758.5		RESERVE

NO.	ADDRESS	SYMBOL	FIRST COMMENT
00711	R0758.6		RESERVE
00712	R0758.7		RESERVE
00713	R0871.0	1MINT	ONE MINUTE TMR
00714	R0871.1	OLSKON	OIL SKIMMER ON DELAY
00715	R0871.2	OLSKOFF	OIL SKIMMER OFF DELAY
00716	R1412.2	DM101	X+ LIFT ENB M-CODE (PAR 2373)
00717	R1412.3	DM102	X- LIFT ENB M-CODE (PAR 2173)
00718	R1412.4	DM103	Z+ LIFT ENB M-CODE (PAR 2373)
00719	R1412.5	DM104	Z- LIFT ENB M-CODE (PAR 2173)
00720	R1415.0		1 SEC_PULSE
00721	R1415.1		COUNT
00722	R1415.2		COUNT
00723	R1415.3		COUNT
00724	R1415.4		COUNT
00725	R1415.5		COUNT
00726	R1415.6		COUNT
00727	R1415.7		COUNT
00728	R1416.0		COUNT
00729	R1416.1		COUNT
00730	R1416.2		COUNT
00731	R1416.3		COUNT
00732	R1416.4		COUNT
00733	R1416.5		100MSEC_PULSE
00734	R1416.6		COUNT
00735	R1416.7		COUNT
00736	R1420.0		COUNT
00737	R1420.1		COUNT
00738	R1420.2		COUNT
00739	R1420.3		COUNT
00740	R1420.4		COUNT
00741	R1420.5		COUNT
00742	R1420.6		COUNT
00743	R1420.7		COUNT
00744	R1421.0		COUNT
00745	R1421.1		COUNT
00746	R1421.2		COUNT
00747	R1421.3		COUNT
00748	R1421.4		COUNT
00749	R1421.5		COUNT
00750	R1421.6		COUNT
00751	R1421.7		COUNT
00752	R1422.0		COUNT
00753	R9000.0	IP=CMP	INPUT DATA = COMPARED DATA
00754	R9000.1	IP<CMP	INPUT DATA < DATA COMPARED
00755	R9000.6		
00756	R9091.6	STMPL	SYSTEM PULSE 0.5SEC
00757	A0000.0	1000	LOW LUB OIL LEVEL,CYC INHIBIT
00758	A0000.1	1001	LOW LUB PRESSURE
00759	A0000.2	1002	CHUCK ACTUATION FAILURE
00760	A0000.3	1003	T.S. BODY UNCLAMP FAULT
00761	A0000.4	1004	T.S. BODY ACTUATION FAILURE
00762	A0000.5	1005	QUILL NOT IN POS,CY INTRUPT
00763	A0000.6	1006	SPINDLE POSITIONING ABORTED
00764	A0000.7	1007	PRG CNTL SW OPRTD, RST & HOME
00765	A0001.0	1010	TURRET CLAMP SIGNAL FAULTY
00766	A0001.1	1011	QUILL POS LOST, SET DOGS & RST
00767	A0001.2	1012	T.S. QUILL ACTUATION FAIL
00768	A0001.3	1013	SPN O/L,CHK TIP,FEED & CUT
00769	A0001.4	1014	X -AXIS CLUTCH TRIPPED
00770	A0001.5	1015	Z - AXIS CLUTCH TRIPPED
00771	A0001.6	1016	TOOL WORNOUT,REPLACE INSERT
00772	A0001.7	1017	TURRET INDEX ABORTED
00773	A0002.0	1020	TUR NOT IN SAFE ZONE,GO XZ-HOM
00774	A0002.1	1021	TUR MOTOR OVER HEATAD
00775	A0002.2	1022	TOOL NUMBER HIGH
00776	A0002.3	1023	TUR UNCLMPD, MOV SAFE ZONE IND
00777	A0002.4	1024	PARTS CATCHER ACT FAILURE
00778	A0002.5	1025	DOOR ACTUATION FAILURE
00779	A0002.6	1026	SPINDLE ORIENTATION ABORTED
00780	A0002.7	1027	AIR PRESSURE LOW
00781	A0003.0	1030	T.P. ACTUATION FAIL

NO.	ADDRESS	SYMBOL	FIRST COMMENT
00782	A0003.1	1031	LUB MOTOR/PR SW CONT ON
00783	A0003.2	1032	HOMING FAILURE
00784	A0003.3	1033	CANCEL CSS BFR T-COMMAND
00785	A0003.4	1034	HYDRAULIC OIL LEVEL LOW
00786	A0003.5	1035	CONVEYOR TH. TRIP/LOAD
00787	A0003.6		
00788	A0004.2	1042	MOVE T.S. QUILL TO HOME POS.
00789	A0004.4	1044	CHECK TURRET ENCODER
00790	A0005.0	1050	PARTS MACHINED=PARTS SET
00791	A0005.1	1051	RELEASE EMG PB
00792	A0005.2	1052	HYD/COOLANT THERLAL O/L
00793	A0005.3	1053	M/C IDLE TRIP, PRESS M/C RESET
00794	A0005.4	1054	MOVE T.S.BODY IN OPPOSITE DIR
00795	A0005.5	1055	COUNTER BALANCE PRESSURE LOW
00796	A0005.6		
00797	A0006.0	1060	CABINET TEMP. TOO HIGH
00798	A0006.1	1061	PLC O/P OVERLOAD/SHORT CKT.,
00799	A0006.2	1062	PLC I/P SHORT CKT.,
00800	A0006.3	1063	CHECK TURRET STATION
00801	A0006.4		
00802	A0007.6	1076	SERVO AMP.WARNING(REF MAINT)
00803	A0007.7	1077	SPINDLE AMP WARNING(REF MAINT)
00804	A0008.0	1080	TOOL 1 WORNOUT
00805	A0008.1	1081	TOOL 2 WORNOUT
00806	A0008.2	1082	TOOL 3 WORNOUT
00807	A0008.3	1083	TOOL 4 WORNOUT
00808	A0008.4	1084	TOOL 5 WORNOUT
00809	A0008.5	1085	TOOL 6 WORNOUT
00810	A0008.6	1086	TOOL 7 WORNOUT
00811	A0008.7	1087	TOOL 8 WORNOUT
00812	A0009.0	1090	TOOL 9 WORNOUT
00813	A0009.1	1091	TOOL 10 WORNOUT
00814	A0009.2	1092	TOOL 11 WORNOUT
00815	A0009.3	1093	TOOL 12 WORNOUT
00816	A0009.4	1094	TOOL/TOOL GROUP WORN OUT
00817	A0009.5	1095	ABS ENCODER NOT SET(P1815.5)
00818	A0009.6	1096	OPEN & CLOSE THE DOOR ONCE
00819	A0010.0	2100	COOLANT CONTACTOR NOT ON
00820	A0010.1	2101	CHUCK POSITION FAULT
00821	A0010.2	2102	CHUCK NOT CLPED,SPN DISABLE
00822	A0010.3	2103	TOOL IS WEARING
00823	A0010.4	2104	CHUCK CLAMPED ON OD
00824	A0010.5	2105	CHUCK CLAMPED ON ID
00825	A0010.6	2106	CHUCK IN EXTREME END POS
00826	A0010.7	2107	AXES NOT REFERENCED, HOME X,Z
00827	A0011.0	2110	HOME X BEFORE Z
00828	A0011.1	2111	HOME Z BEFORE X
00829	A0011.2	2112	CLAMP CHUCK BEFORE SPN START
00830	A0011.3	2113	DOOR OPEN,CLOSE BEFORE CY STRT
00831	A0011.4	2114	CONVEYOR TH. TRIP/LS OPEN
00832	A0011.5	2115	TOOL PROBING INCOMPLETE
00833	A0011.6	2116	PRESS MACHINE RESET PB,
00834	A0011.7	2117	COOLANT-2 CONTACTOR NOT ON
00835	A0012.0	2120	SPINDLE STOP, DOOR OPEN
00836	A0013.0		TOOL 1 GETTING WORNOUT
00837	A0013.1		TOOL 2 GETTING WORNOUT
00838	A0013.2		TOOL 3 GETTING WORNOUT
00839	A0013.3		TOOL 4 GETTING WORNOUT
00840	A0013.4		TOOL 5 GETTING WORNOUT
00841	A0013.5		TOOL 6 GETTING WORNOUT
00842	A0013.6		TOOL 7 GETTING WORNOUT
00843	A0013.7		TOOL 8 GETTING WORNOUT
00844	A0014.0		TOOL 9 GETTING WORNOUT
00845	A0014.1		TOOL 10 GETTING WORNOUT
00846	A0014.2		TOOL 11 GETTING WORNOUT
00847	A0014.3		TOOL 12 GETTING WORNOUT
00848	A0014.4	2144	TOOL/TOOL GROUP GETING WORNOUT
00849	A0015.0	1150	CHECK/REPLACE SPINDLE BELTS
00850	A0015.1	1151	CHECK X-SLIDE BACKLASH
00851	A0015.2	1152	CHECK Z-SLIDE BACKLASH
00852	A0015.3	1153	CHECK X-SLIDE WIPER CONDITION

NO.	ADDRESS	SYMBOL	FIRST COMMENT
00853	A0015.4	1154	CHECK Z-SLIDE WIPER CONDITION
00854	A0015.5	1155	REPLACE LUB. CARTRIDGE
00855	A0015.6	1156	CHANGE HYDRAULIC OIL
00856	A0015.7	1157	CLEAN DRIVE COOLING FANS
00857	A0016.0	1160	CLEAN SPINDLE BLOWER FAN
00858	A0016.1	1161	CLEAN PANEL COOLER FILTER
00859	A0016.2	1162	REPLACE PANEL COOLER FILTER
00860	A0016.3	1163	TIME FOR TURRET SERVICING
00861	A0016.4	1164	CHANGE TURRET BOX GEAR BOX OIL
00862	A0016.5	1165	CLEAN/REPLACE FRL
00863	A0016.6	1166	CLEAN/REPLACE SUCTION FILTER
00864	A0016.7	1167	TIME FOR CHUCK SERVICING
00865	A0017.0	1170	TIME FOR CHIP CLEAN
00866	K0000.0	T8/T12	HIGH FOR 8 STATION TURRET
00867	K0000.1	ONECY1	CYCLE START PB ON MCP
00868	K0000.2	ZFIRST	Z TO REFERENCE FIRST
00869	K0000.3	ONECY2	SINGLE EXTERNAL CYCLE START PB
00870	K0000.4	TSPROX	T.S. PROX. BYPASS(LT-25)
00871	K0000.5	IDSEL	ID CLAMP SELECTION
00872	K0000.6	TULC16	HIGH FOR M/C WITOUT TURRET
00873	K0000.7	TSQO/R	HIGH FOR M/C'S W/O PROG QUILL
00874	K0001.0	DRILOF	DOOR INTERLOCK OFF
00875	K0001.1	ADRSEL	AUTO DOOR SELECT
00876	K0001.2	CHKO/R	CHUCK SIGNAL O/R ON
00877	K0001.3	TYBYP2	PROBE OTHER AXES MSG O/R M-COD
00878	K0001.4	TSI/L	T.S. QUILL I/L FOR CYCLE START
00879	K0001.5	BDTO/R	A0.7 ALARM O/R WITH BDT ON
00880	K0001.6		RESERVED
00881	K0001.7	SPSTRL	SPINDLE ENABLE WITH STOP PB
00882	K0002.3	SPPSOR	SPN HEALTHY FOR SPN POS OVR
00883	K0002.4	RPCSOR	CSS INTERLOCK O/R
00884	K0002.6		
00885	K0002.7		
00886	K0003.0	EDRSBY	EDIT-AUTO RESET BYPASS
00887	K0003.1	TQACLC	T.S. QUILL ACTUATION-1 LATCH
00888	K0003.2	FSM00	F.S. WITH M00/M01 DISABLE
00889	K0003.3	OVRON	FEED/SPINDLE O/R KEEP RELAY
00890	K0003.4	LUBSTP	CYCLE STOP WITH LUB FAULT
00891	K0003.5	BARTLF	TOOL LIFE MANAGEMENT(BAR-F)
00892	K0003.6	LUON_K	KEEP RELAY FOR LUB ON
00893	K0003.7		
00894	K0004.0	SARBYP	SPINDLE SPEED ARRIVAL BYPASS
00895	K0004.1	HOMREL	NORMAL HOMING MUST FOR CY SRT
00896	K0004.2		
00897	K0004.4		RESERVED
00898	K0004.5	OPT_PM	PERIODIC MAINTENANCE
00899	K0004.6	LUBE_POWERON	OPT LUBEON WITH POWERON
00900	K0004.7		RESERVED
00901	K0005.0	OPTPRT	PARTS CATCHER OPTION
00902	K0005.1	OPTADR	AUTO DOOR OPTION
00903	K0005.2	OPTCHP	CHIP CONVEYOR OPTION
00904	K0005.3	OPTTS1	T.S. BODY -STD OPTION
00905	K0005.4	OPTTS2	T.S. BODY-LT25 OPTION
00906	K0005.5	OPTTP1	T.P.-MANUAL OPTION
00907	K0005.6	OPTTP2	T.P. -AUTO OPTION
00908	K0005.7	OPTFS	FS ACTIVE/INACTIVE - OPTION
00909	K0006.0	OPTTLF	TOOL LIFE OPTION
00910	K0006.1	OPTSPO	SPINDLE ORIENTATION OPTION
00911	K0006.2	APROPT	AIR PRESSURE OPTION
00912	K0006.3	OPTHFS	HYDRAULIC FLOAT SWITCH OPTION
00913	K0006.4	OPTLF2	TOOL LIFE OPTION(FANUC)
00914	K0006.5	OPTIDT	M/C IDLE TRIP OPTION
00915	K0006.6	A/COPT	A/C ALARM ENABLE/DISABLE
00916	K0006.7		RESERVED
00917	K0007.0		
00918	K0007.5		
00919	K0007.6		
00920	K0007.7	OPTTL	TOWER LAMP MESSAGE/ALM
00921	K0008.0	DOOR+CHUCK	DOOR+CHUCK
00922	K0008.1	DOOR+QUILL+CHUCK	DOOR+QUILL+CHUCK
00923	K0008.2		

NO.	ADDRESS	SYMBOL	FIRST COMMENT
00924	K0008.3		
00925	K0008.4	NCCLTH	HIGH FOR NC TYPE CLUTCH TRIP
00926	K0008.5	XCLLCH	X CLT TRIP MEMORISE RELAY
00927	K0008.6	ZCLLCH	Z CLT TRIP MEMORISE RELAY
00928	K0008.7	ININRF	INITIATE NORMAL HOMING
00929	K0009.7	BUTHOM	INITIATE BUTT HOMING
00930	K0012.0		RESERVE
00931	K0012.1		RESERVE
00932	K0012.2		RESERVE
00933	K0012.3		RESERVE
00934	K0012.4		RESERVE
00935	K0012.5		RESERVE
00936	K0012.6		RESERVE
00937	K0012.7		RESERVE
00938	X0002	TRFDBK	TURRET FEEDBACK BYTE
00939	F0010	MBYTE	M-DECODE BYTE
00940	F0026	TCBYTE	TOOL FUNCTION CODE BYTE
00941	G0010	FRBYT1	MANUAL FEED RATE O/R BYTE - 1
00942	G0011	FRBYT2	MANUAL FEED RATE O/R BYTE - 2
00943	G0012	F/RBYT	FEED RATE OVERRIDE BYTE
00944	G0014	ROVR	
00945	G0030	SPBYTE	SPINDLE SPEED O/R BYTE
00946	R0120		RESERVE
00947	R0126		RESERVE
00948	R0134		CURRENT DATE
00949	R0136		CURRENT HOUR
00950	R0138		CURRENT MINUTES
00951	R0150		CURRENT DATE
00952	R0154		CURRENT HOUR
00953	R0158		CURRENT MINUTES
00954	R0162		RESERVE
00955	R0550	PARRD	PAR READ BASE DATA
00956	R0554		RESERVED
00957	R0556		RESERVED
00958	R0558		RESERVED
00959	R0608	TRFDBKR	TURRET FEEDBACK REGISTER BYTE
00960	R0618	TFBBYT	TURRET BIN F/B BYTE
00961	R0621	TURCMD	TURRET COMMAND BYTE
00962	R0623	SPTFUN	RESERVED BYTE FOR SHORTER PATH
00963	R0669		RESERVED
00964	R0680	PARWRT	PARAM WRITE BASE DATA ADD
00965	R0694	PREZER	PRESET ZERO BYTE
00966	R0700	DBYT1	M DECODE BYTE 1
00967	R0701	DBYT2	M DECODE BYTE 2
00968	R0702	DBYTE3	M DECODE BYTE 3
00969	R0703	DBYTE4	M DECODE BYTE 4
00970	R0704	DBYTE5	M DECODE BYTE 5
00971	R0705	DBYTE6	M DECODE BYTE6
00972	R0706	DBYTE7	M DECODE BYTE 7
00973	R0707	DBYTE8	M DECODE BYTE 8
00974	R0708	DBYTE9	M DECODE BYTE 9
00975	R0709	DBYTE10	M DECODE BYTE 10
00976	R0710	DBYTE11	M DECODE BYTE 11
00977	R0711	DBYTE12	M DECODE BYTE 12
00978	R0712	FEDBYT	FEED O/R BYTE
00979	R0714	SPNBYT	SPINDLE SPEED O/R BYTE
00980	R0720		RESERVED
00981	R0722		RESERVED
00982	R0724		RESERVED
00983	R0758	ROVRRL	RAPID OVERRIDE
00984	R1412	DBYTE13	M DECODE BYTE 13
00985	R1413	DBYTE14	M DECODE BYTE 14
00986	C0001		
00987	C0002		
00988	C0003		
00989	C0004		
00990	C0005		
00991	C0006		
00992	D0000	12	BYTE FOR 12 STATION TURRET
00993	D0001	8	BYTE FOR 8 STATION TURRET
00994	D1100		PRESET VALUE

NO.	ADDRESS	SYMBOL	FIRST COMMENT
00995	D1102		CURRENT VALUE
00996	D1106		PRESET VALUE
00997	D1108		CURRENT VALUE
00998	D1112		PRESET VALUE
00999	D1114		CURRENT VALUE
01000	D1118		PRESET VALUE
01001	D1120		CURRENT VALUE
01002	D1124		PRESET VALUE
01003	D1126		CURRENT VALUE
01004	D1130		PRESET VALUE
01005	D1132		CURRENT VALUE
01006	D1136		PRESET VALUE
01007	D1138		CURRENT VALUE
01008	D1142		PRESET VALUE
01009	D1144		CURRENT VALUE
01010	D1148		PRESET VALUE
01011	D1150		CURRENT VALUE
01012	D1154		PRESET VALUE
01013	D1156		CURRENT VALUE
01014	D1160		PRESET VALUE
01015	D1162		CURRENT VALUE
01016	D1166		PRESET VALUE
01017	D1168		CURRENT VALUE
01018	D1172		PRESET VALUE
01019	D1174		CURRENT VALUE
01020	D1178		PRESET-COUNT
01021	D1180		CURRENT VALUE
01022	D1194		SETVALUE A17.0
01023	D1196		CURRENTVALUE A17.0
01024	D1200		SETVALUE A15.0
01025	D1202		CURENTVALUEA15.0
01026	D1206		SETVALUE A15.1
01027	D1208		CURENTVALUEA15.1
01028	D1212		SETVALUE A15.2
01029	D1214		CURENTVALUEA15.2
01030	D1218		SETVALUE A15.3
01031	D1220		CURENTVALUEA15.3
01032	D1224		SETVALUE A15.4
01033	D1226		CURENTVALUEA15.4
01034	D1230		SETVALUE A16.5
01035	D1232		CURENTVALUEA16.5
01036	D1236		SETVALUE A16.6
01037	D1238		CURENTVALUEA16.6
01038	D1242		SETVALUE A15.5
01039	D1244		CURENTVALUEA15.5
01040	D1248		SETVALUE A15.6
01041	D1250		CURENTVALUEA15.6
01042	D1254		SETVALUE A15.7
01043	D1256		CURENTVALUEA15.7
01044	D1260		SETVALUE A16.0
01045	D1262		CURENTVALUEA16.0
01046	D1266		SETVALUE A16.1
01047	D1268		CURENTVALUEA16.1
01048	D1272		SETVALUE A16.2
01049	D1274		CURENTVALUEA16.2
01050	D1278		SETVALUE A16.3
01051	D1280		CURENTVALUEA16.3
01052	D1284		SETVALUE A16.4
01053	D1286		CURENTVALUEA16.4
01054	D1290		SETVALUE A16.7
01055	D1292		CURENTVALUEA16.7
01056	D1294		
01057	D1296		
01058	T0001		
01059	T0005		
01060	T0006		
01061	T0008		
01062	T0009		
01063	T0010		
01064	T0011		
01065	T0012		

NO.	ADDRESS	SYMBOL	FIRST COMMENT
01066	T0013		
01067	T0015		
01068	T0016		
01069	T0017		
01070	T0018		
01071	T0019		
01072	T0020		
01073	T0021		
01074	T0022		
01075	T0023		
01076	T0024		
01077	T0025		
01078	T0026		
01079	T0027		
01080	T0028		
01081	T0029		
01082	T0030		
01083	T0031		
01084	T0040		
01085	T0041		
01086	T0042		
01087	T0043		
01088	T0044		
01089	T0045		
01090	T0046		
01091	T0047		
01092	T0048		
01093	T0049		
01094	T0050		
01095	T0051		
01096	T0052		
01097	T0053		
01098	T0056		
01099	T0057		
01100	T0061		
01101	T0062		
01102	T0063		
01103	T0064		
01104	T0065		
01105	T0069		
01106	T0070		
01107	T0071		
01108	T0072		
01109	T0073		
01110	T0074		
01111	P0001	PARTS_CATCHER	
01112	P0002	AUTO_DOOR	
01113	P0003	CHIP_CONVEYOR	
01114	P0004	TSBODY-STD	
01115	P0005	TP-MANUAL	
01116	P0006	TP-AUTO	
01117	P0007	TSBODY-LT25	
01118	P0008	FS-ACTIVE	
01119	P0009	LUBRICATION	
01120	P0010	COOLANT	
01121	P0011	CHUCK	
01122	P0012	T.S._QUILL	
01123	P0013	T-LIFE	
01124	P0014	SPN_ORIEN	
01125	P0015	SPN_POSITIONING	
01126	P0016	AIR_PRESSURE	
01127	P0017	TOOLLIFE-FANUC	
01128	P0018	PERIODIC_MAINT	
01129	P0019		

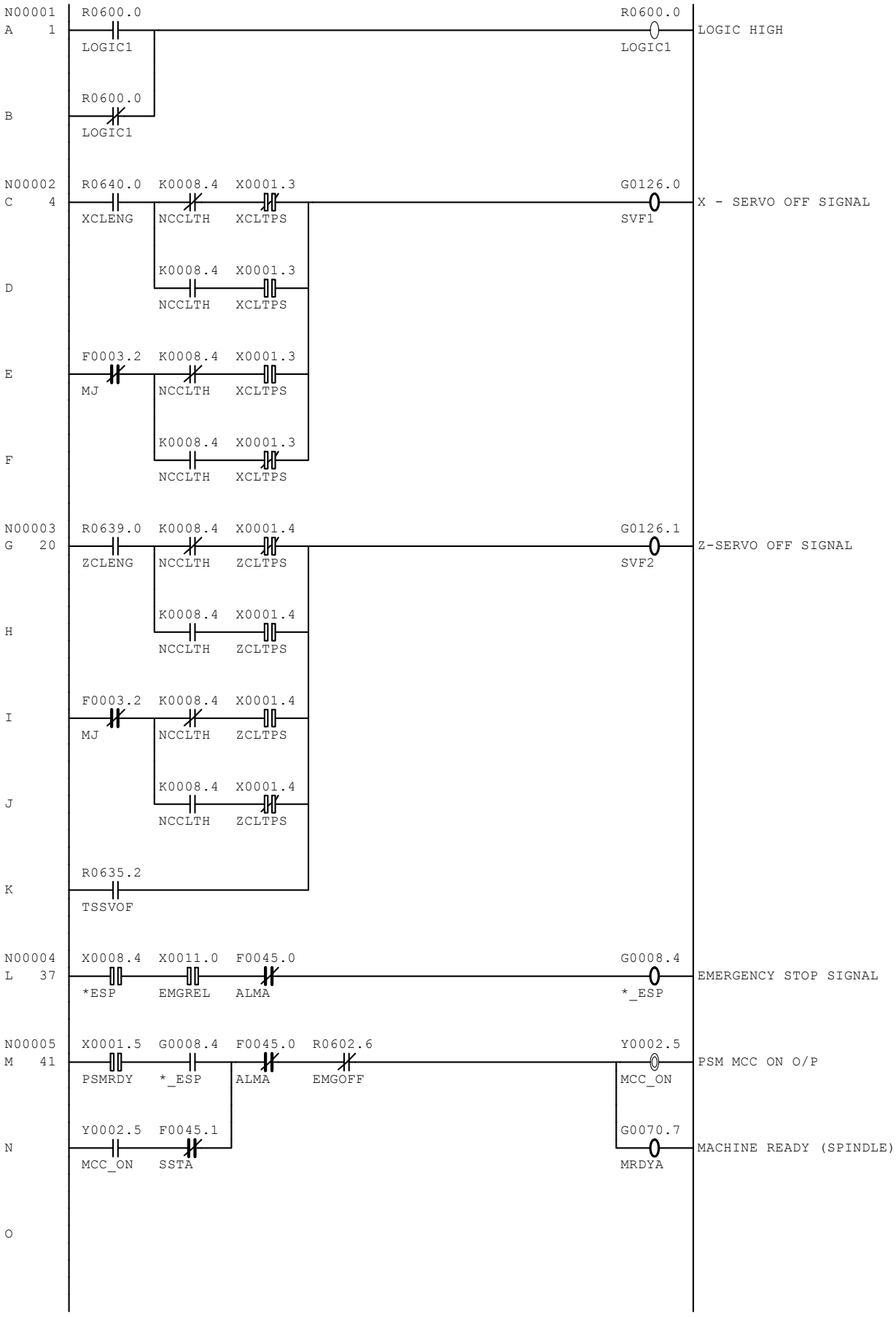
N00001
A 1
R0600.0
LOGIC1
R0600.0
LOGIC1
LOGIC HIGH
B
R0600.0
LOGIC1
N00002
C 4
R0640.0
XCLENG
K0008.4
NCCLTH
X0001.3
XCLTPS
G0126.0
SVF1
X - SERVO OFF SIGNAL
D
K0008.4
NCCLTH
X0001.3
XCLTPS
E
F0003.2
MJ
K0008.4
NCCLTH
X0001.3
XCLTPS
F
K0008.4
NCCLTH
X0001.3
XCLTPS
N00003
G 20
R0639.0
ZCLENG
K0008.4
NCCLTH
X0001.4
ZCLTPS
G0126.1
SVF2
Z-SERVO OFF SIGNAL
H
K0008.4
NCCLTH
X0001.4
ZCLTPS
I
F0003.2
MJ
K0008.4
NCCLTH
X0001.4
ZCLTPS
J
K0008.4
NCCLTH
X0001.4
ZCLTPS
K
R0635.2
TSSVOF
N00004
L 37
X0008.4
*ESP
X0011.0
EMGREL
F0045.0
ALMA
G0008.4
*_ESP
EMERGENCY STOP SIGNAL
N00005
M 41
X0001.5
PSMRDY
G0008.4
*_ESP
F0045.0
ALMA
R0602.6
EMGOFF
Y0002.5
MCC_ON
PSM MCC ON O/P
N
Y0002.5
MCC_ON
F0045.1
SSTA
G0070.7
MRDYA
MACHINE READY (SPINDLE)
O

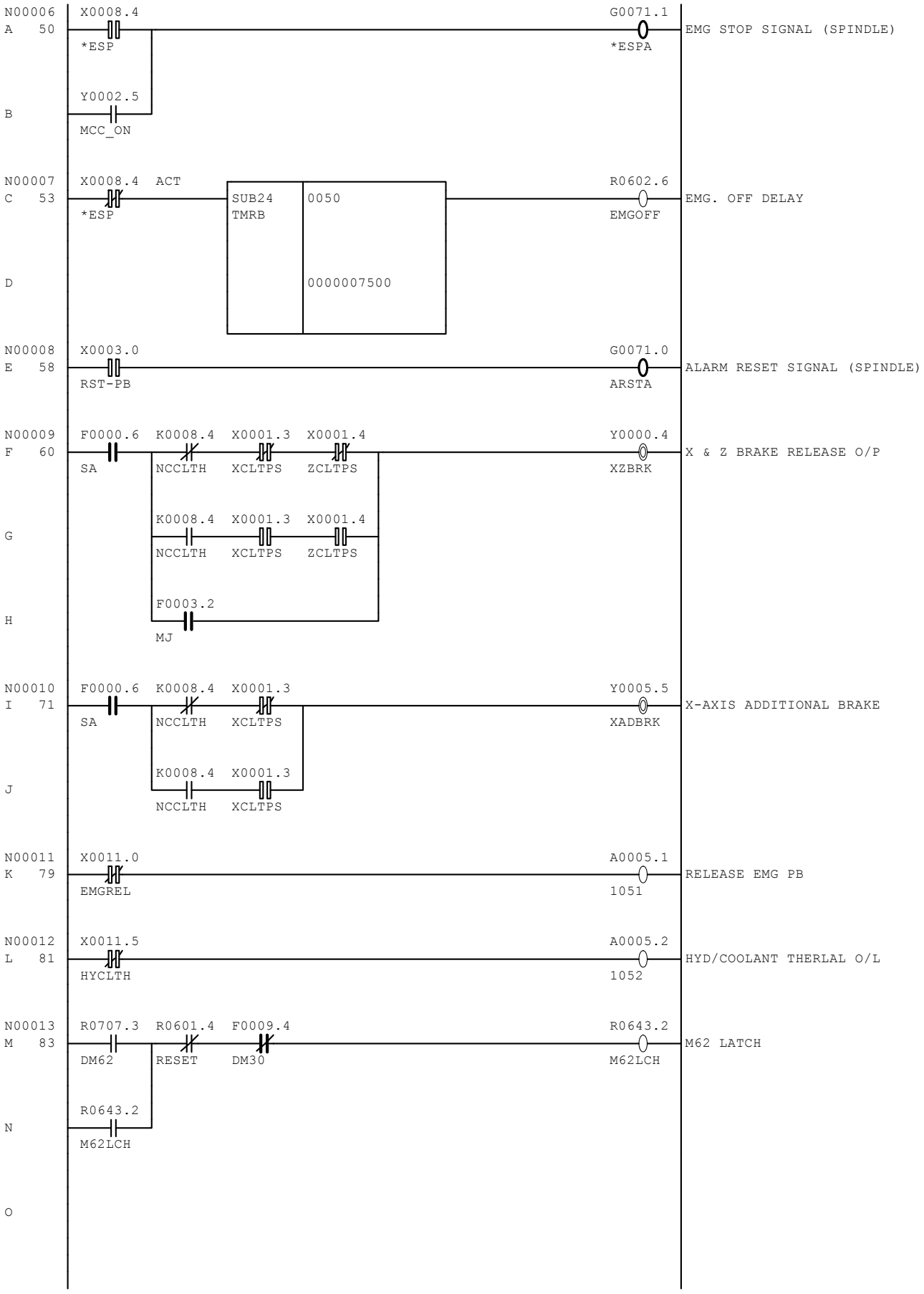
N00006
A 50
X0008.4
*ESP
G0071.1
*ESPA
EMG STOP SIGNAL (SPINDLE)
Y0002.5
B
MCC_ON
N00007
C 53
X0008.4 ACT
*ESP
SUB24
TMRB
0050
0000007500
R0602.6
EMGOFF
EMG. OFF DELAY
D
N00008
E 58
X0003.0
RST-PB
G0071.0
ARSTA
ALARM RESET SIGNAL (SPINDLE)
N00009
F 60
F0000.6
SA
K0008.4
NCCLTH
X0001.3
XCLTPS
X0001.4
ZCLTPS
Y0000.4
XZBRK
X & Z BRAKE RELEASE O/P
G
H
F0003.2
MJ
N00010
I 71
F0000.6
SA
K0008.4
NCCLTH
X0001.3
XCLTPS
Y0005.5
XADBRK
X-AXIS ADDITIONAL BRAKE
J
N00011
K 79
X0011.0
EMGREL
A0005.1
1051
RELEASE EMG PB
N00012
L 81
X0011.5
HYCLTH
A0005.2
1052
HYD/COOLANT THERLAL O/L
N00013
M 83
R0707.3
DM62
R0601.4
RESET
F0009.4
DM30
R0643.2
M62LCH
M62 LATCH
N
O

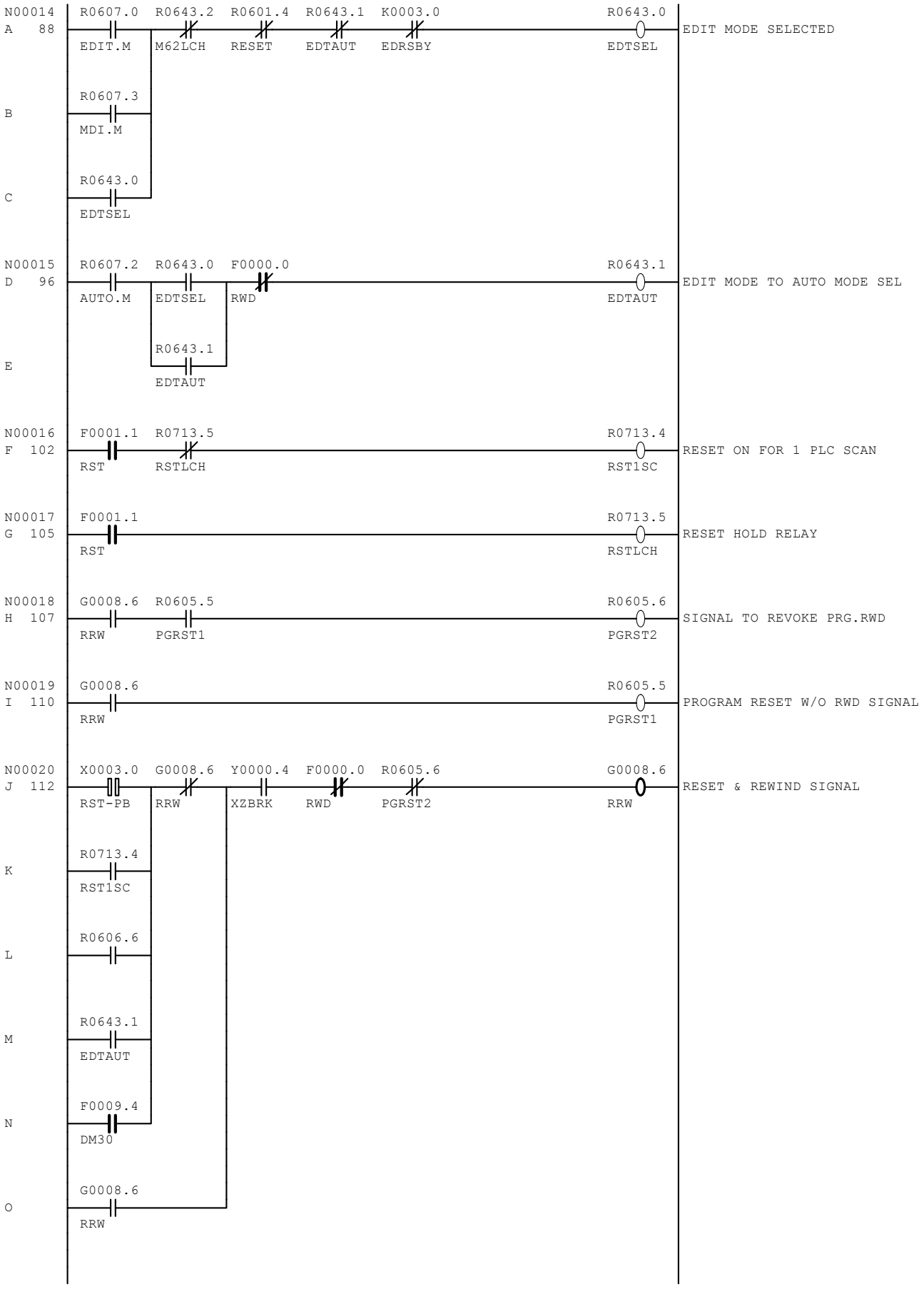
N00014
A 88
R0607.0
EDIT.M
R0643.2
M62LCH
R0601.4
RESET
R0643.1
EDTAUT
K0003.0
EDRSBY
R0643.0
EDTSEL
EDIT MODE SELECTED
B
R0607.3
MDI.M
C
R0643.0
EDTSEL
N00015
D 96
R0607.2
AUTO.M
R0643.0
EDTSEL
F0000.0
RWD
R0643.1
EDTAUT
EDIT MODE TO AUTO MODE SEL
E
R0643.1
EDTAUT
N00016
F 102
F0001.1
RST
R0713.5
RSTLCH
R0713.4
RST1SC
RESET ON FOR 1 PLC SCAN
N00017
G 105
F0001.1
RST
R0713.5
RSTLCH
RESET HOLD RELAY
N00018
H 107
G0008.6
RRW
R0605.5
PGRST1
R0605.6
PGRST2
SIGNAL TO REVOKE PRG.RWD
N00019
I 110
G0008.6
RRW
R0605.5
PGRST1
PROGRAM RESET W/O RWD SIGNAL
N00020
J 112
X0003.0
RST-PB
G0008.6
RRW
Y0000.4
XZBRK
F0000.0
RWD
R0605.6
PGRST2
G0008.6
RRW
RESET & REWIND SIGNAL
K
R0713.4
RST1SC
L
R0606.6
M
R0643.1
EDTAUT
N
F0009.4
DM30
O
G0008.6
RRW

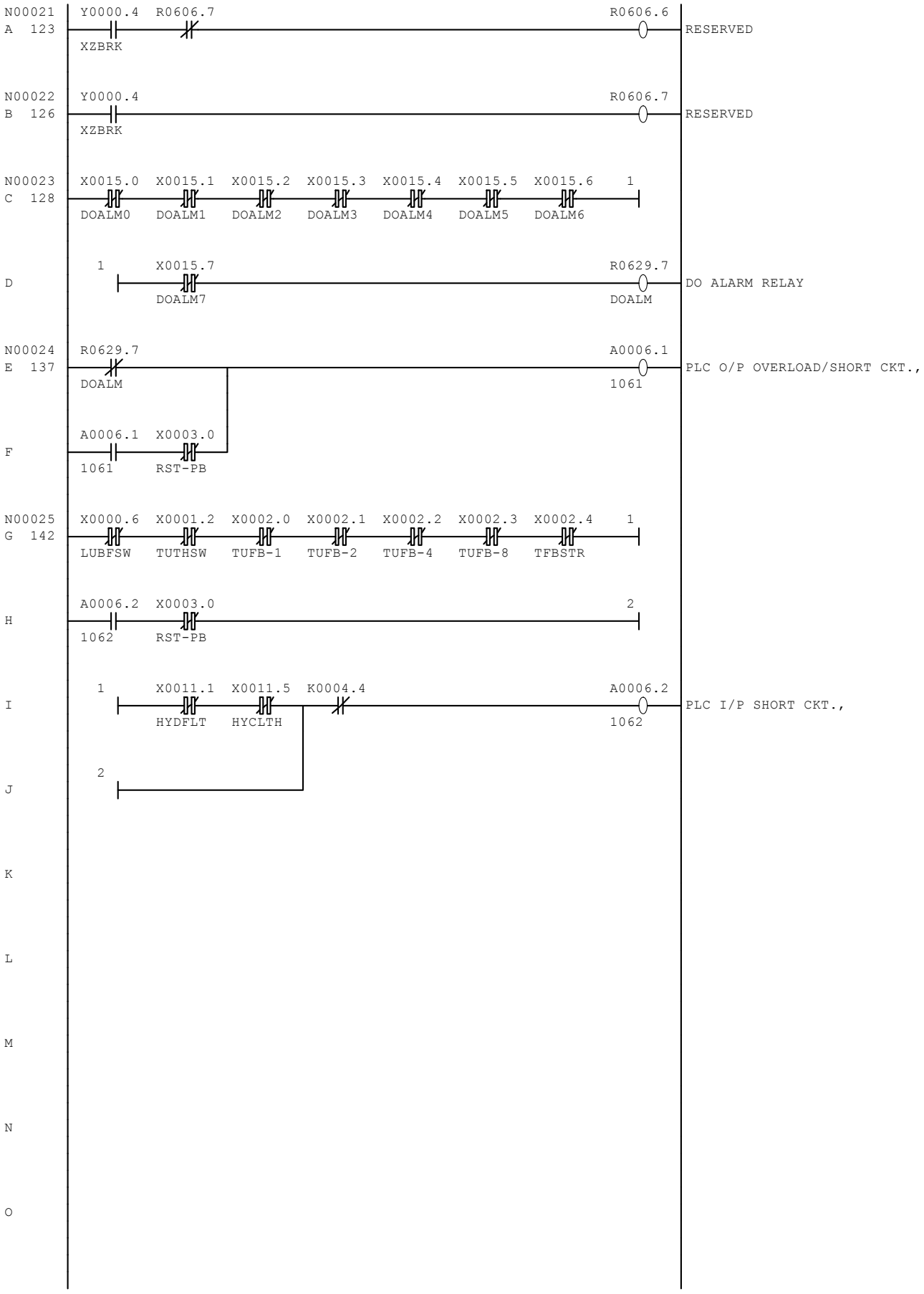
N00021
A 123
Y0000.4
R0606.7
XZBRK
R0606.6
RESERVED
N00022
B 126
Y0000.4
XZBRK
R0606.7
RESERVED
N00023
C 128
X0015.0
X0015.1
X0015.2
X0015.3
X0015.4
X0015.5
X0015.6
1
DOALM0
DOALM1
DOALM2
DOALM3
DOALM4
DOALM5
DOALM6
D
1
X0015.7
DOALM7
R0629.7
DOALM
DO ALARM RELAY
N00024
E 137
R0629.7
DOALM
A0006.1
1061
PLC O/P OVERLOAD/SHORT CKT.,
F
A0006.1
X0003.0
1061
RST-PB
N00025
G 142
X0000.6
X0001.2
X0002.0
X0002.1
X0002.2
X0002.3
X0002.4
1
LUBFSW
TUTHSW
TUFB-1
TUFB-2
TUFB-4
TUFB-8
TFBSTR
H
A0006.2
X0003.0
1062
RST-PB
2
I
1
X0011.1
X0011.5
K0004.4
HYDFLT
HYCLTH
A0006.2
1062
PLC I/P SHORT CKT.,
J
2
K
L
M
N
O

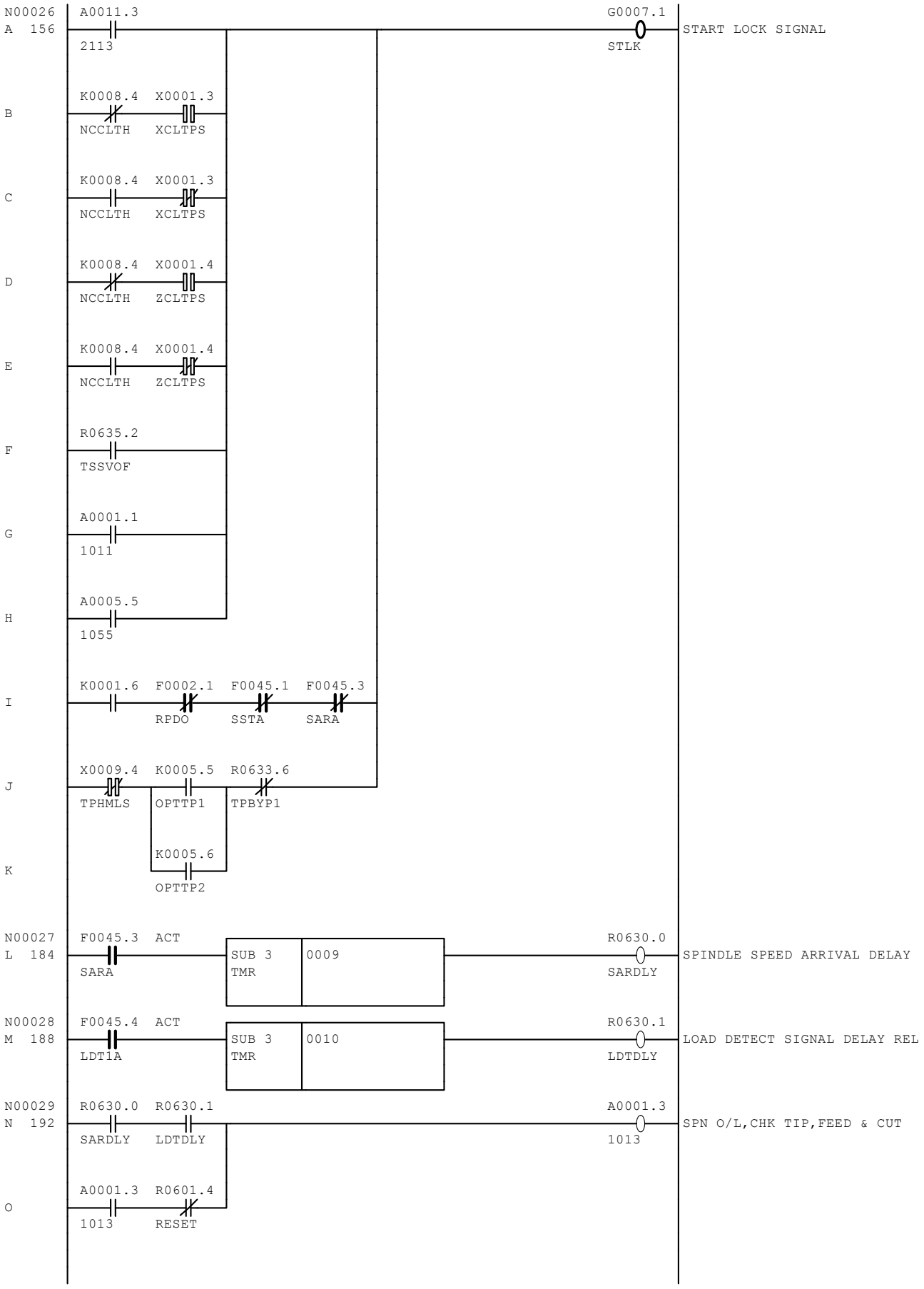
N00026
A 156
A0011.3
2113
G0007.1
STLK
START LOCK SIGNAL
B
K0008.4
NCCLTH
X0001.3
XCLTPS
C
K0008.4
NCCLTH
X0001.3
XCLTPS
D
K0008.4
NCCLTH
X0001.4
ZCLTPS
E
K0008.4
NCCLTH
X0001.4
ZCLTPS
F
R0635.2
TSSVOF
G
A0001.1
1011
H
A0005.5
1055
I
K0001.6
F0002.1
RPDO
F0045.1
SSTA
F0045.3
SARA
J
X0009.4
TPHMLS
K0005.5
OPTTP1
R0633.6
TPBYP1
K
K0005.6
OPTTP2
N00027
L 184
F0045.3
SARA
ACT
SUB 3
TMR
0009
R0630.0
SARDLY
SPINDLE SPEED ARRIVAL DELAY
N00028
M 188
F0045.4
LDT1A
ACT
SUB 3
TMR
0010
R0630.1
LDTDLY
LOAD DETECT SIGNAL DELAY REL
N00029
N 192
R0630.0
SARDLY
R0630.1
LDTDLY
A0001.3
1013
SPN O/L,CHK TIP,FEED & CUT
O
A0001.3
1013
R0601.4
RESET

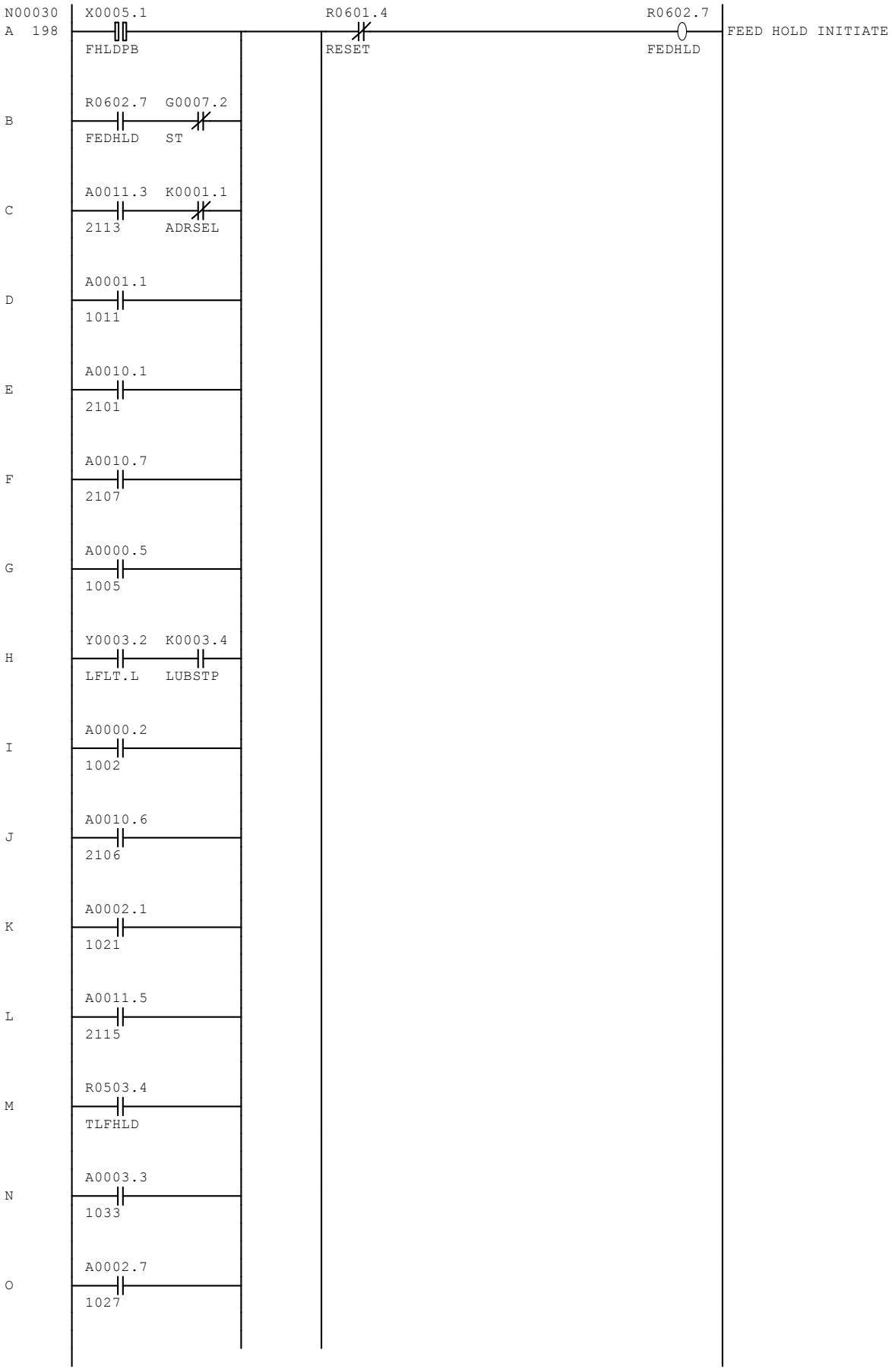
N00030
A 198
X0005.1
FHLDPB
R0601.4
RESET
R0602.7
FEDHLD
FEED HOLD INITIATE
B
R0602.7
FEDHLD
G0007.2
ST
C
A0011.3
2113
K0001.1
ADRSEL
D
A0001.1
1011
E
A0010.1
2101
F
A0010.7
2107
G
A0000.5
1005
H
Y0003.2
LFLT.L
K0003.4
LUBSTP
I
A0000.2
1002
J
A0010.6
2106
K
A0002.1
1021
L
A0011.5
2115
M
R0503.4
TLFHLD
N
A0003.3
1033
O
A0002.7
1027

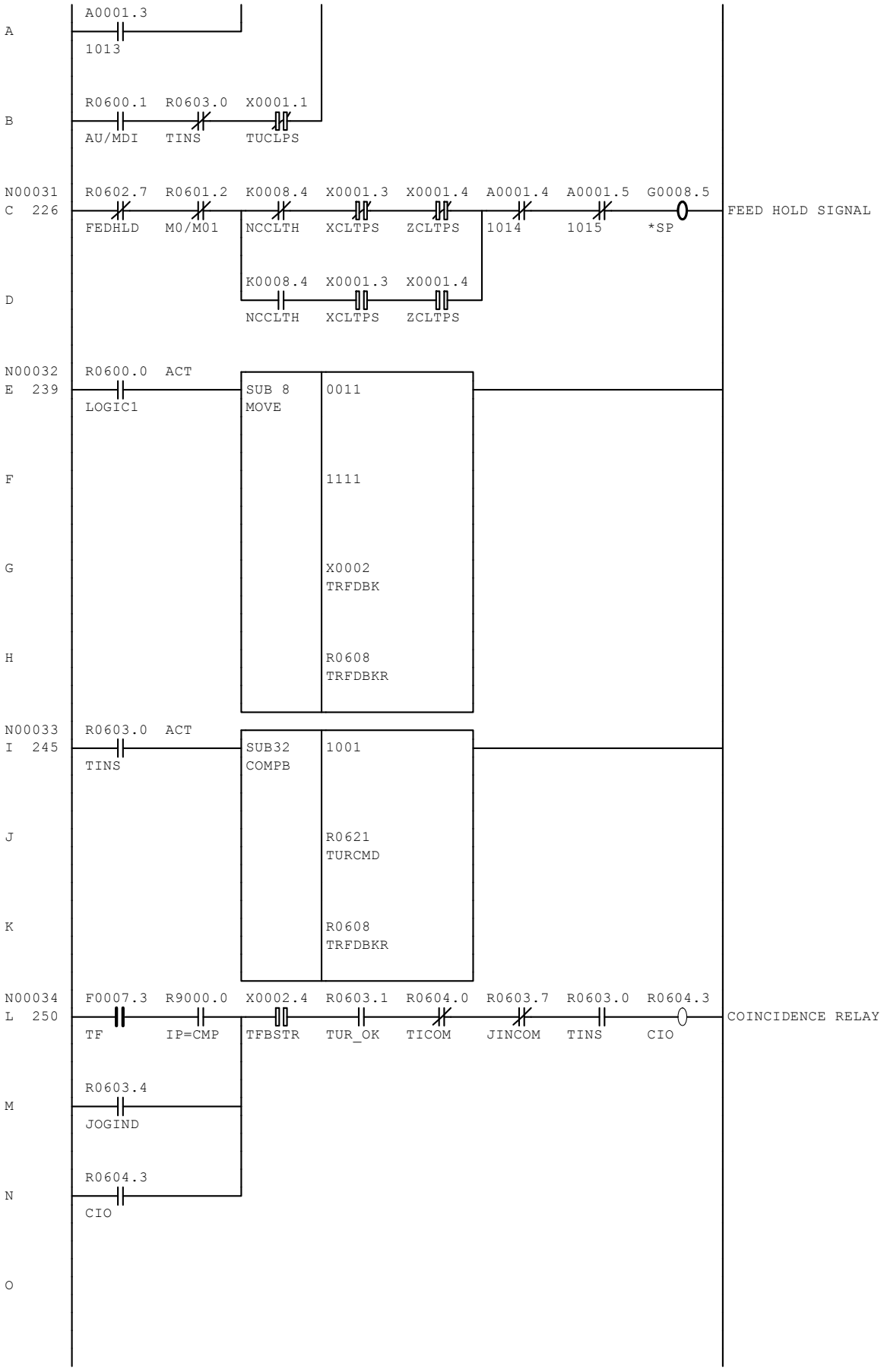
A
A0001.3
1013
B
R0600.1 R0603.0 X0001.1
AU/MDI TINS TUCLPS
N00031
C 226
R0602.7 R0601.2 K0008.4 X0001.3 X0001.4 A0001.4 A0001.5 G0008.5
FEDHLD M0/M01 NCCLTH XCLTPS ZCLTPS 1014 1015 *SP
FEED HOLD SIGNAL
D
K0008.4 X0001.3 X0001.4
NCCLTH XCLTPS ZCLTPS
N00032
E 239
R0600.0 ACT
LOGIC1
SUB 8
MOVE
0011
F
1111
G
X0002
TRFDBK
H
R0608
TRFDBKR
N00033
I 245
R0603.0 ACT
TINS
SUB32
COMPB
1001
J
R0621
TURCMD
K
R0608
TRFDBKR
N00034
L 250
F0007.3 R9000.0 X0002.4 R0603.1 R0604.0 R0603.7 R0603.0 R0604.3
TF IP=CMP TFBSTR TUR_OK TICOM JINCOM TINS CIO
COINCIDENCE RELAY
M
R0603.4
JOGIND
N
R0604.3
CIO
O

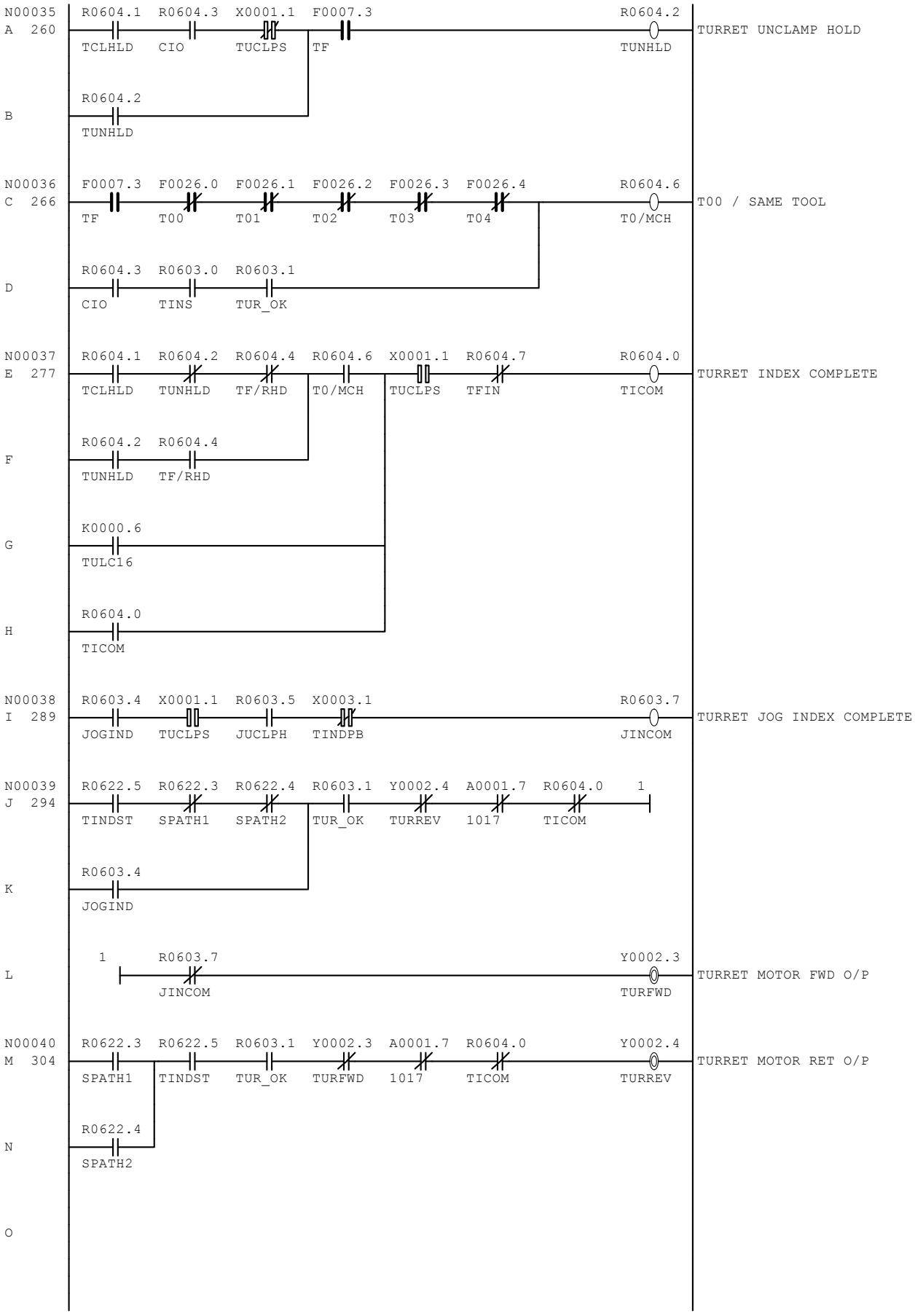
N00035
A 260
R0604.1 TCLHLD
R0604.3 CIO
X0001.1 TUCLPS
F0007.3 TF
R0604.2 TUNHLD
TURRET UNCLAMP HOLD
B
R0604.2 TUNHLD
N00036
C 266
F0007.3 TF
F0026.0 T00
F0026.1 T01
F0026.2 T02
F0026.3 T03
F0026.4 T04
R0604.6 T0/MCH
T00 / SAME TOOL
D
R0604.3 CIO
R0603.0 TINS
R0603.1 TUR_OK
N00037
E 277
R0604.1 TCLHLD
R0604.2 TUNHLD
R0604.4 TF/RHD
R0604.6 T0/MCH
X0001.1 TUCLPS
R0604.7 TFIN
R0604.0 TICOM
TURRET INDEX COMPLETE
F
R0604.2 TUNHLD
R0604.4 TF/RHD
G
K0000.6 TULC16
H
R0604.0 TICOM
N00038
I 289
R0603.4 JOGIND
X0001.1 TUCLPS
R0603.5 JUCLPH
X0003.1 TINDPB
R0603.7 JINCOM
TURRET JOG INDEX COMPLETE
N00039
J 294
R0622.5 TINDST
R0622.3 SPATH1
R0622.4 SPATH2
R0603.1 TUR_OK
Y0002.4 TURREV
A0001.7 1017
R0604.0 TICOM
1
K
R0603.4 JOGIND
L
1
R0603.7 JINCOM
Y0002.3 TURFWD
TURRET MOTOR FWD O/P
N00040
M 304
R0622.3 SPATH1
R0622.5 TINDST
R0603.1 TUR_OK
Y0002.3 TURFWD
A0001.7 1017
R0604.0 TICOM
Y0002.4 TURREV
TURRET MOTOR RET O/P
N
R0622.4 SPATH2
O

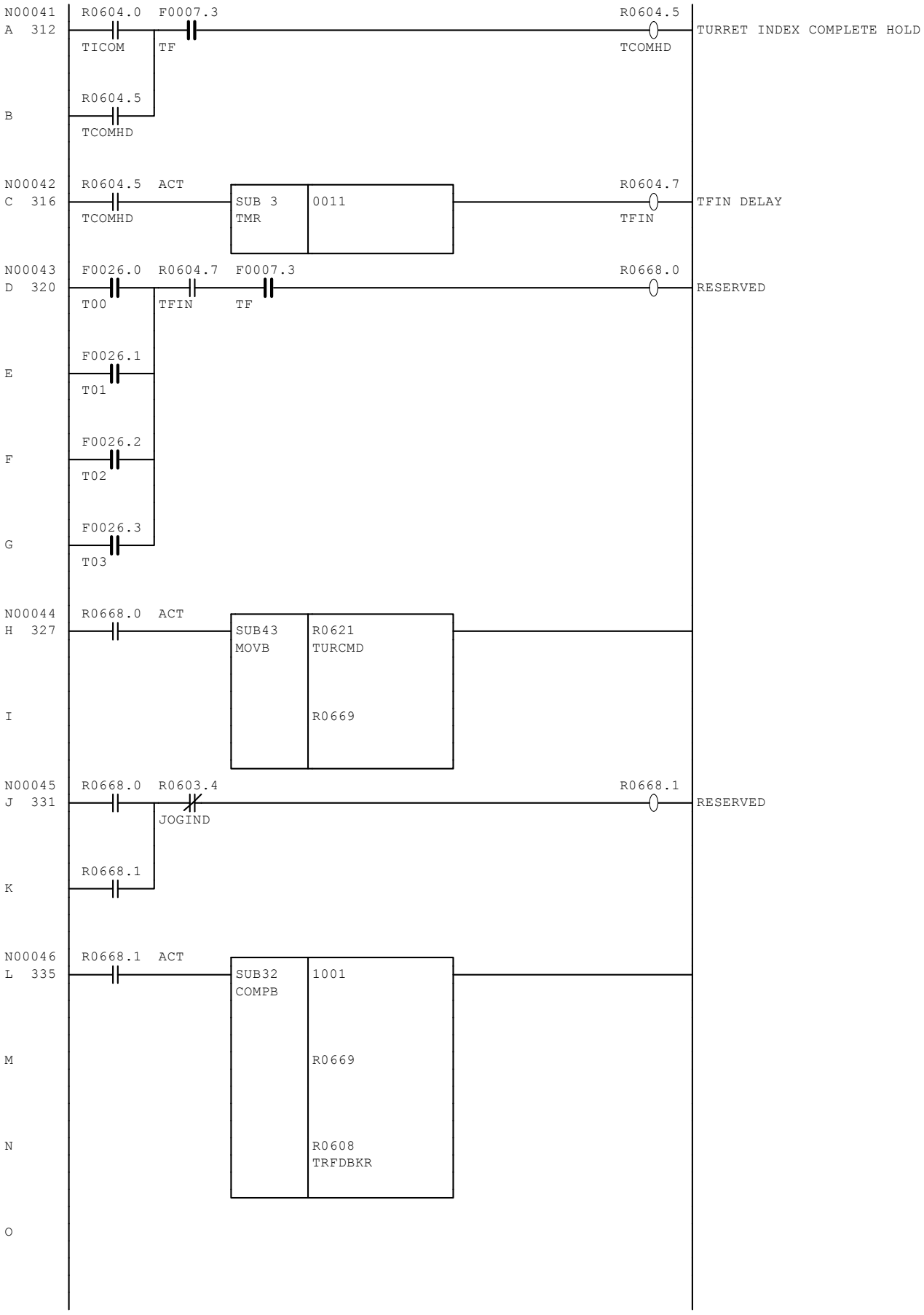
N00041
A 312
R0604.0
TICOM
F0007.3
TF
R0604.5
TCOMHD
TURRET INDEX COMPLETE HOLD
B
R0604.5
TCOMHD
N00042
C 316
R0604.5 ACT
TCOMHD
SUB 3
TMR
0011
R0604.7
TFIN
TFIN DELAY
N00043
D 320
F0026.0
T00
R0604.7
TFIN
F0007.3
TF
R0668.0
RESERVED
E
F0026.1
T01
F
F0026.2
T02
G
F0026.3
T03
N00044
H 327
R0668.0 ACT
SUB43
MOVB
R0621
TURCMD
I
R0669
N00045
J 331
R0668.0
R0603.4
JOGIND
R0668.1
RESERVED
K
R0668.1
N00046
L 335
R0668.1 ACT
SUB32
COMPB
1001
M
R0669
N
R0608
TRFDBKR
O

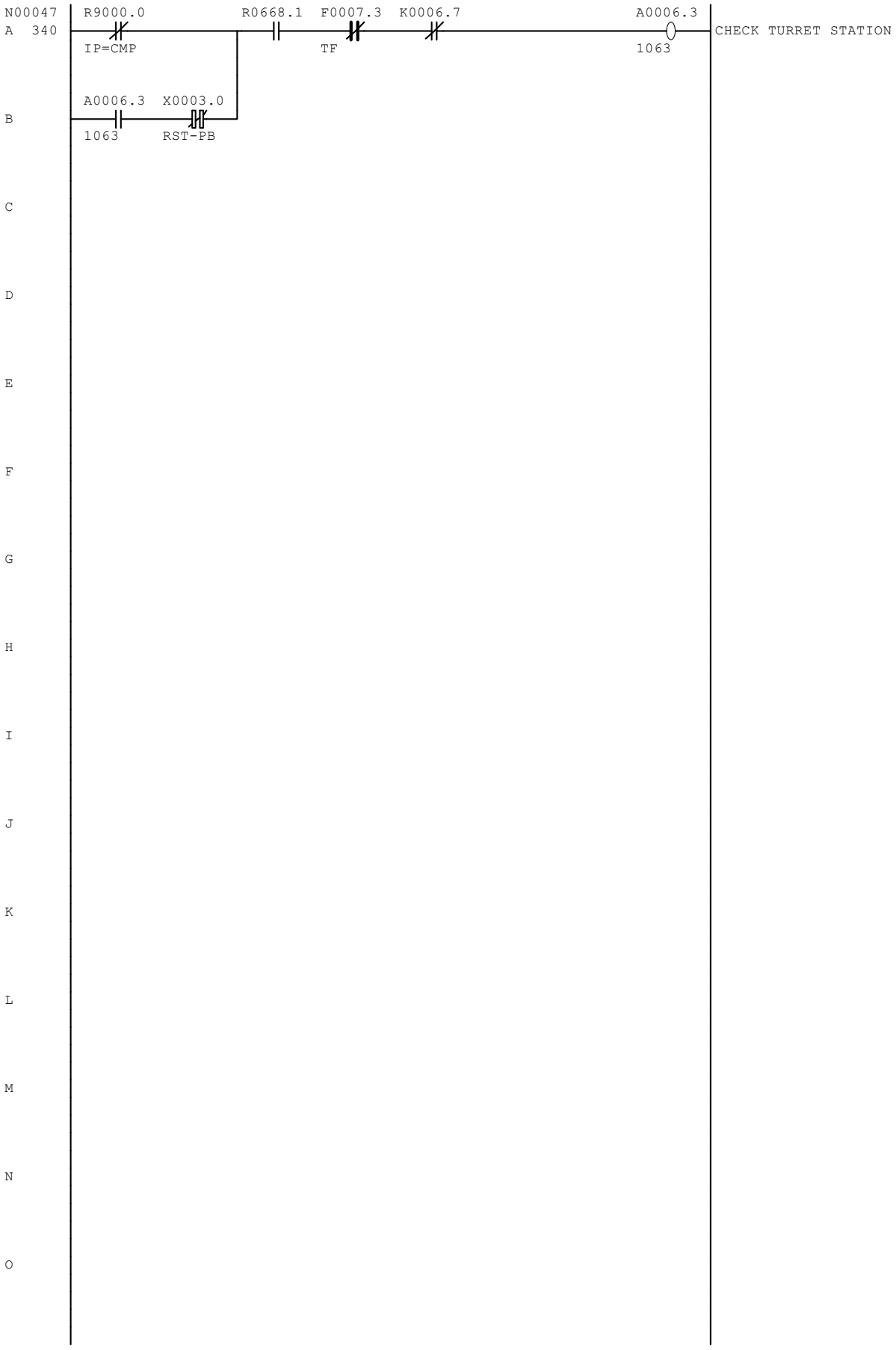
N00047
A 340
R9000.0
IP=CMP
R0668.1
F0007.3
TF
K0006.7
A0006.3
1063
CHECK TURRET STATION
B
A0006.3
1063
X0003.0
RST-PB
C
D
E
F
G
H
I
J
K
L
M
N
O

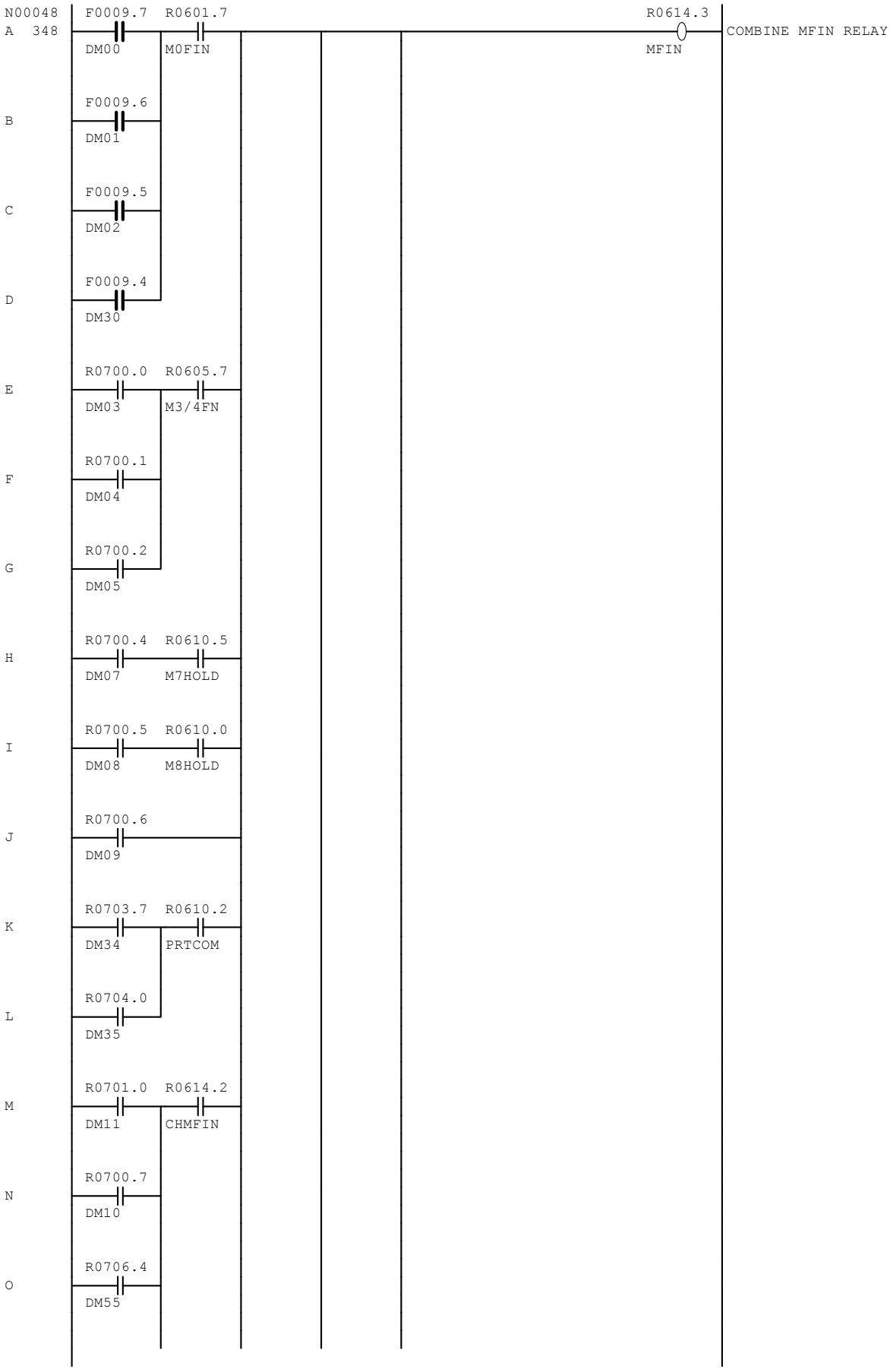
N00048
A 348
F0009.7
DM00
R0601.7
M0FIN
R0614.3
MFIN
COMBINE MFIN RELAY
B
F0009.6
DM01
C
F0009.5
DM02
D
F0009.4
DM30
E
R0700.0
DM03
R0605.7
M3/4FN
F
R0700.1
DM04
G
R0700.2
DM05
H
R0700.4
DM07
R0610.5
M7HOLD
I
R0700.5
DM08
R0610.0
M8HOLD
J
R0700.6
DM09
K
R0703.7
DM34
R0610.2
PRTCOM
L
R0704.0
DM35
M
R0701.0
DM11
R0614.2
CHMFIN
N
R0700.7
DM10
O
R0706.4
DM55

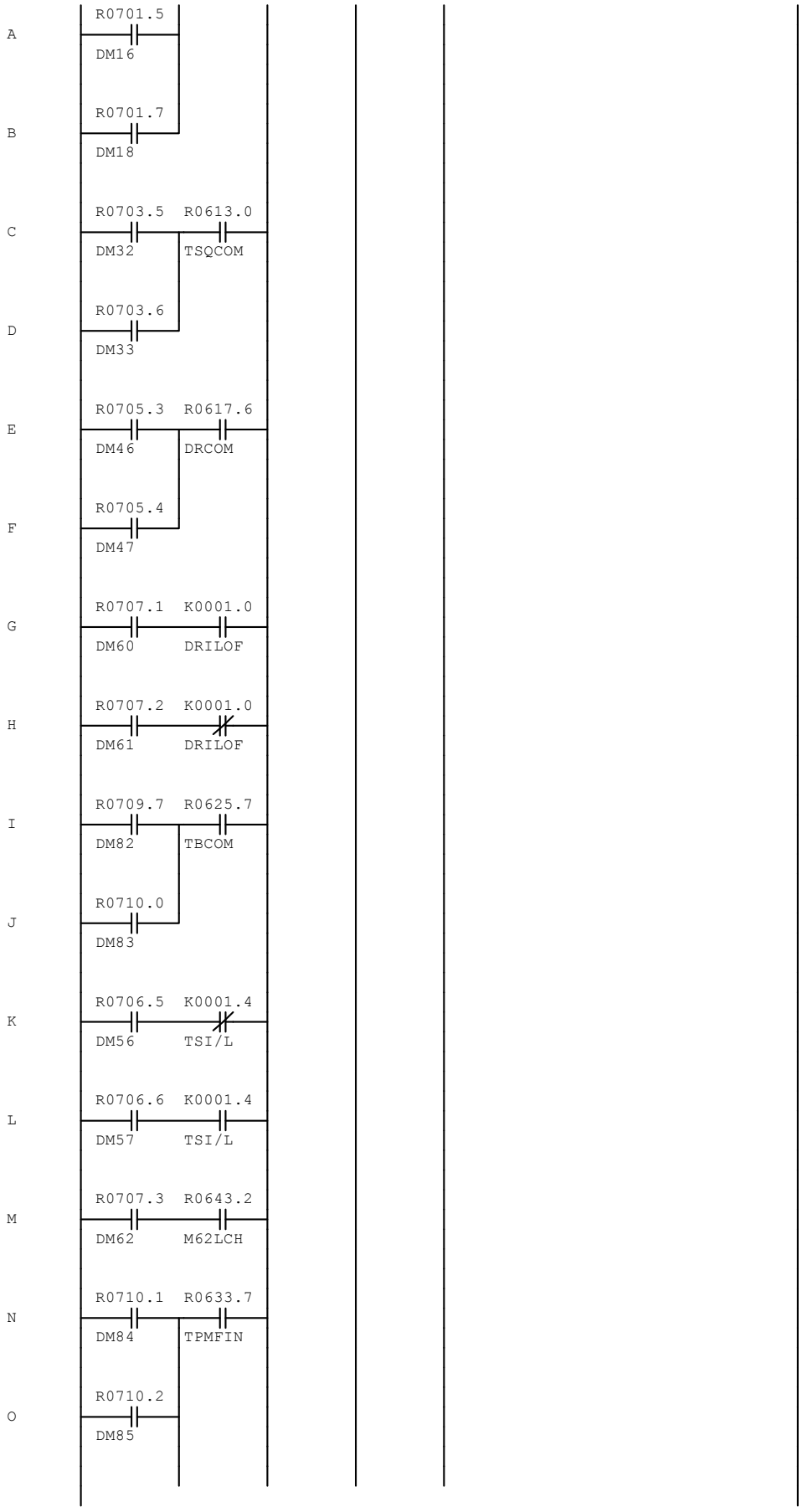
A
R0701.5
DM16
B
R0701.7
DM18
C
R0703.5
DM32
R0613.0
TSQCOM
D
R0703.6
DM33
E
R0705.3
DM46
R0617.6
DRCOM
F
R0705.4
DM47
G
R0707.1
DM60
K0001.0
DRILOF
H
R0707.2
DM61
K0001.0
DRILOF
I
R0709.7
DM82
R0625.7
TBCOM
J
R0710.0
DM83
K
R0706.5
DM56
K0001.4
TSI/L
L
R0706.6
DM57
K0001.4
TSI/L
M
R0707.3
DM62
R0643.2
M62LCH
N
R0710.1
DM84
R0633.7
TPMFIN
O
R0710.2
DM85

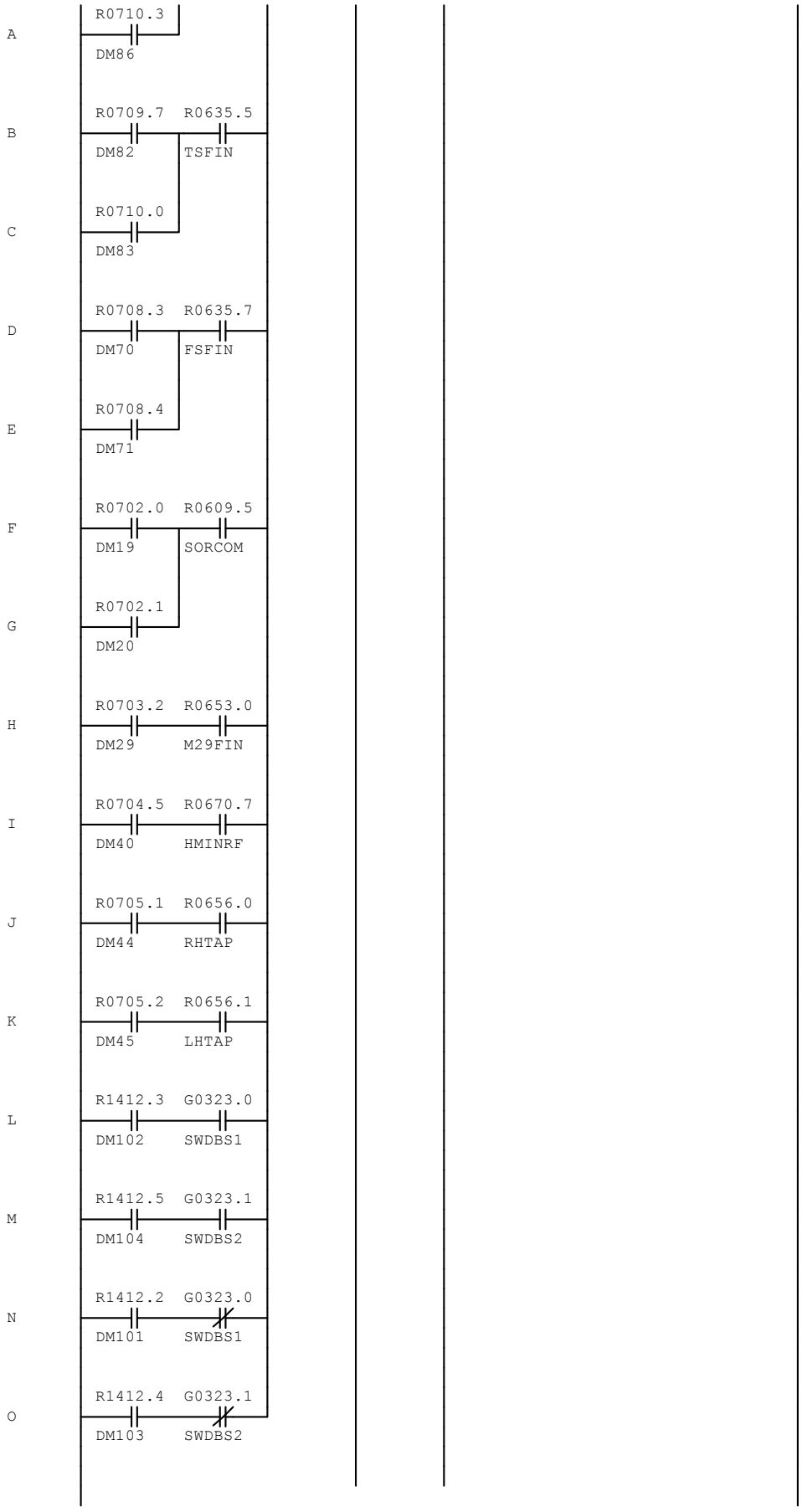
A
R0710.3
DM86
B
R0709.7
DM82
R0635.5
TSFIN
C
R0710.0
DM83
D
R0708.3
DM70
R0635.7
FSFIN
E
R0708.4
DM71
F
R0702.0
DM19
R0609.5
SORCOM
G
R0702.1
DM20
H
R0703.2
DM29
R0653.0
M29FIN
I
R0704.5
DM40
R0670.7
HMINRF
J
R0705.1
DM44
R0656.0
RHTAP
K
R0705.2
DM45
R0656.1
LHTAP
L
R1412.3
DM102
G0323.0
SWDBS1
M
R1412.5
DM104
G0323.1
SWDBS2
N
R1412.2
DM101
G0323.0
SWDBS1
O
R1412.4
DM103
G0323.1
SWDBS2

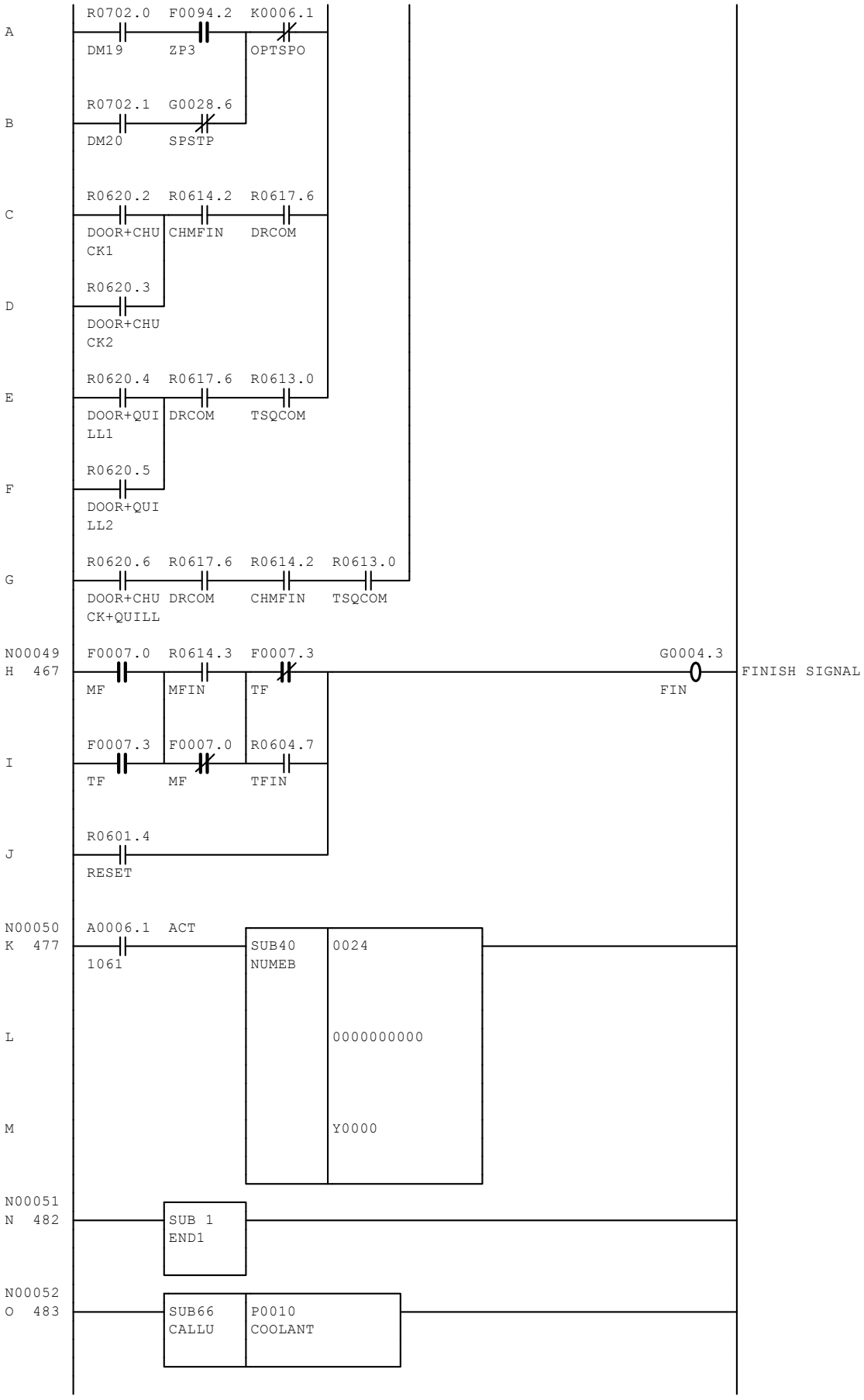
A
R0702.0
DM19
F0094.2
ZP3
K0006.1
OPTSPO
B
R0702.1
DM20
G0028.6
SPSTP
C
R0620.2
DOOR+CHUCK1
R0614.2
CHMFIN
R0617.6
DRCOM
D
R0620.3
DOOR+CHUCK2
E
R0620.4
DOOR+QUILL1
R0617.6
DRCOM
R0613.0
TSQCOM
F
R0620.5
DOOR+QUILL2
G
R0620.6
DOOR+CHUCK+QUILL
R0617.6
DRCOM
R0614.2
CHMFIN
R0613.0
TSQCOM
N00049
H 467
F0007.0
MF
R0614.3
MFIN
F0007.3
TF
G0004.3
FIN
FINISH SIGNAL
I
F0007.3
TF
F0007.0
MF
R0604.7
TFIN
J
R0601.4
RESET
N00050
K 477
A0006.1
1061
ACT
SUB40
NUMEB
0024
L
0000000000
M
Y0000
N00051
N 482
SUB 1
END1
N00052
O 483
SUB66
CALLU
P0010
COOLANT

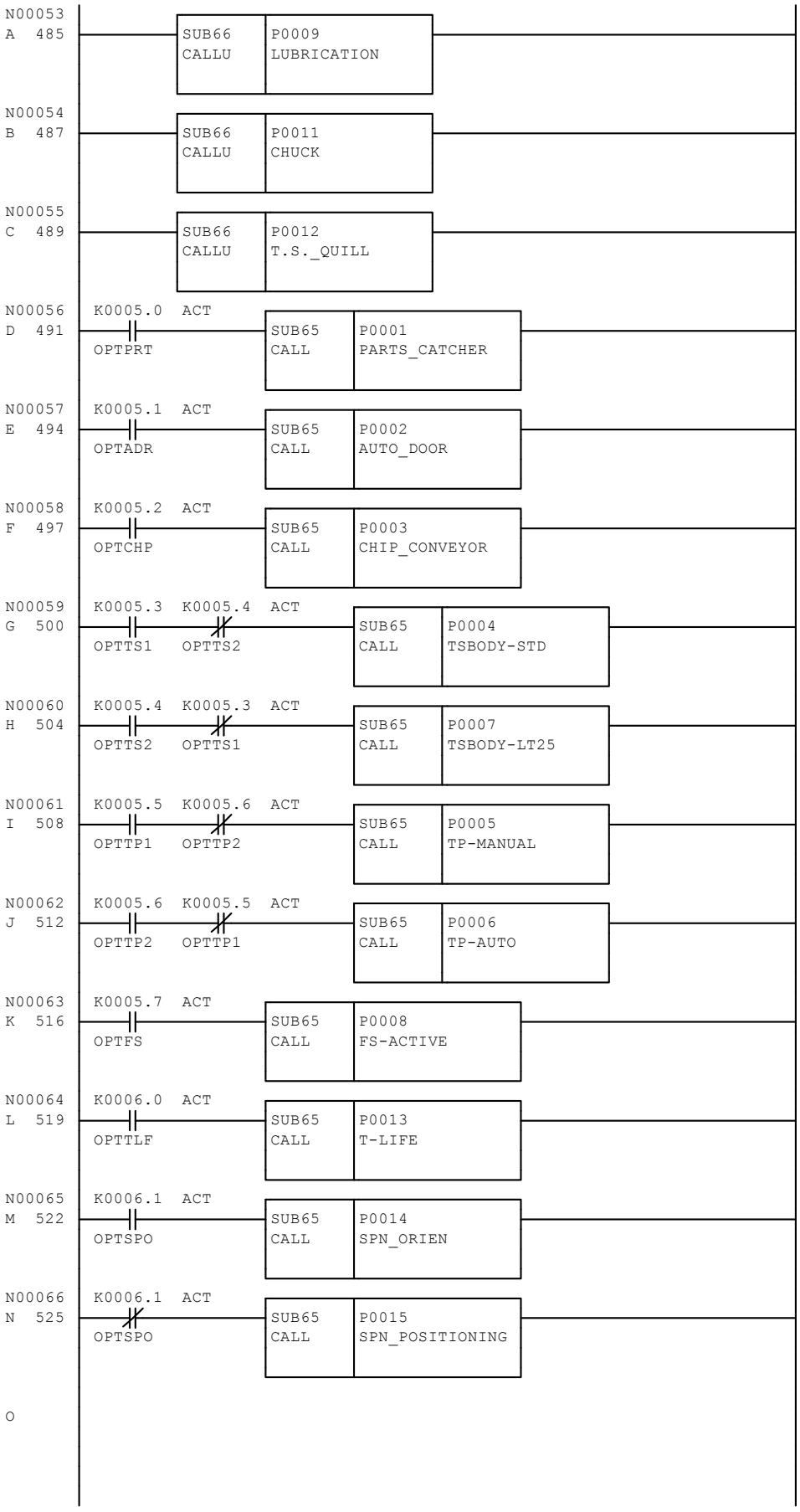
N00053
A 485
SUB66
CALLU
P0009
LUBRICATION
N00054
B 487
SUB66
CALLU
P0011
CHUCK
N00055
C 489
SUB66
CALLU
P0012
T.S._QUILL
N00056
D 491
K0005.0 ACT
OPTPRT
SUB65
CALL
P0001
PARTS_CATCHER
N00057
E 494
K0005.1 ACT
OPTADR
SUB65
CALL
P0002
AUTO_DOOR
N00058
F 497
K0005.2 ACT
OPTCHP
SUB65
CALL
P0003
CHIP_CONVEYOR
N00059
G 500
K0005.3 K0005.4 ACT
OPTTS1 OPTTS2
SUB65
CALL
P0004
TSBODY-STD
N00060
H 504
K0005.4 K0005.3 ACT
OPTTS2 OPTTS1
SUB65
CALL
P0007
TSBODY-LT25
N00061
I 508
K0005.5 K0005.6 ACT
OPTTP1 OPTTP2
SUB65
CALL
P0005
TP-MANUAL
N00062
J 512
K0005.6 K0005.5 ACT
OPTTP2 OPTTP1
SUB65
CALL
P0006
TP-AUTO
N00063
K 516
K0005.7 ACT
OPTFS
SUB65
CALL
P0008
FS-ACTIVE
N00064
L 519
K0006.0 ACT
OPTTLF
SUB65
CALL
P0013
T-LIFE
N00065
M 522
K0006.1 ACT
OPTSPO
SUB65
CALL
P0014
SPN_ORIEN
N00066
N 525
K0006.1 ACT
OPTSPO
SUB65
CALL
P0015
SPN_POSITIONING
O

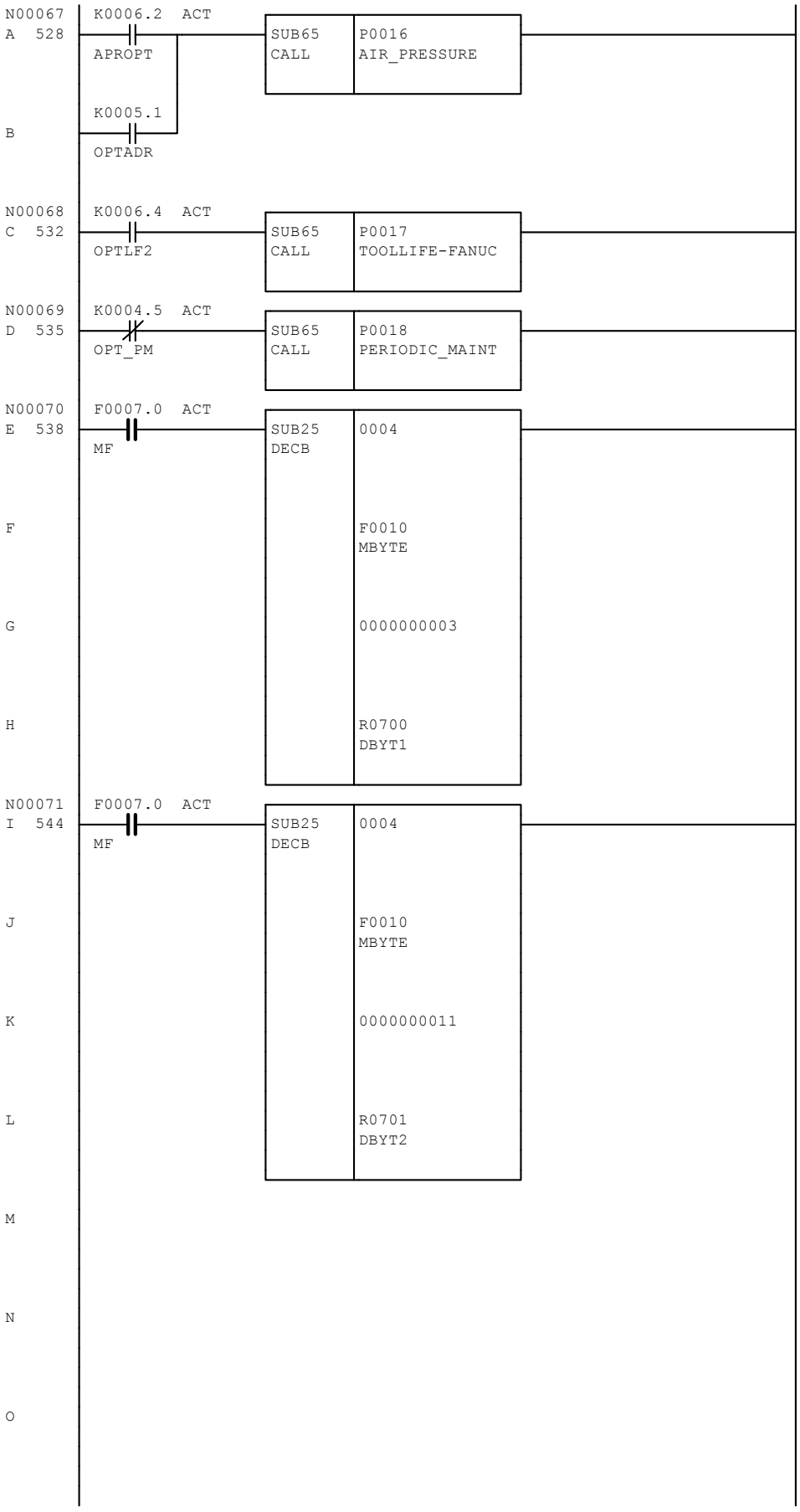
N00067
A 528
K0006.2 ACT
APROPT
K0005.1
B
OPTADR
SUB65
CALL
P0016
AIR_PRESSURE
N00068
C 532
K0006.4 ACT
OPTLF2
SUB65
CALL
P0017
TOOLLIFE-FANUC
N00069
D 535
K0004.5 ACT
OPT_PM
SUB65
CALL
P0018
PERIODIC_MAINT
N00070
E 538
F0007.0 ACT
MF
SUB25
DECB
0004
F
F0010
MBYTE
G
0000000003
H
R0700
DBYT1
N00071
I 544
F0007.0 ACT
MF
SUB25
DECB
0004
J
F0010
MBYTE
K
0000000011
L
R0701
DBYT2
M
N
O

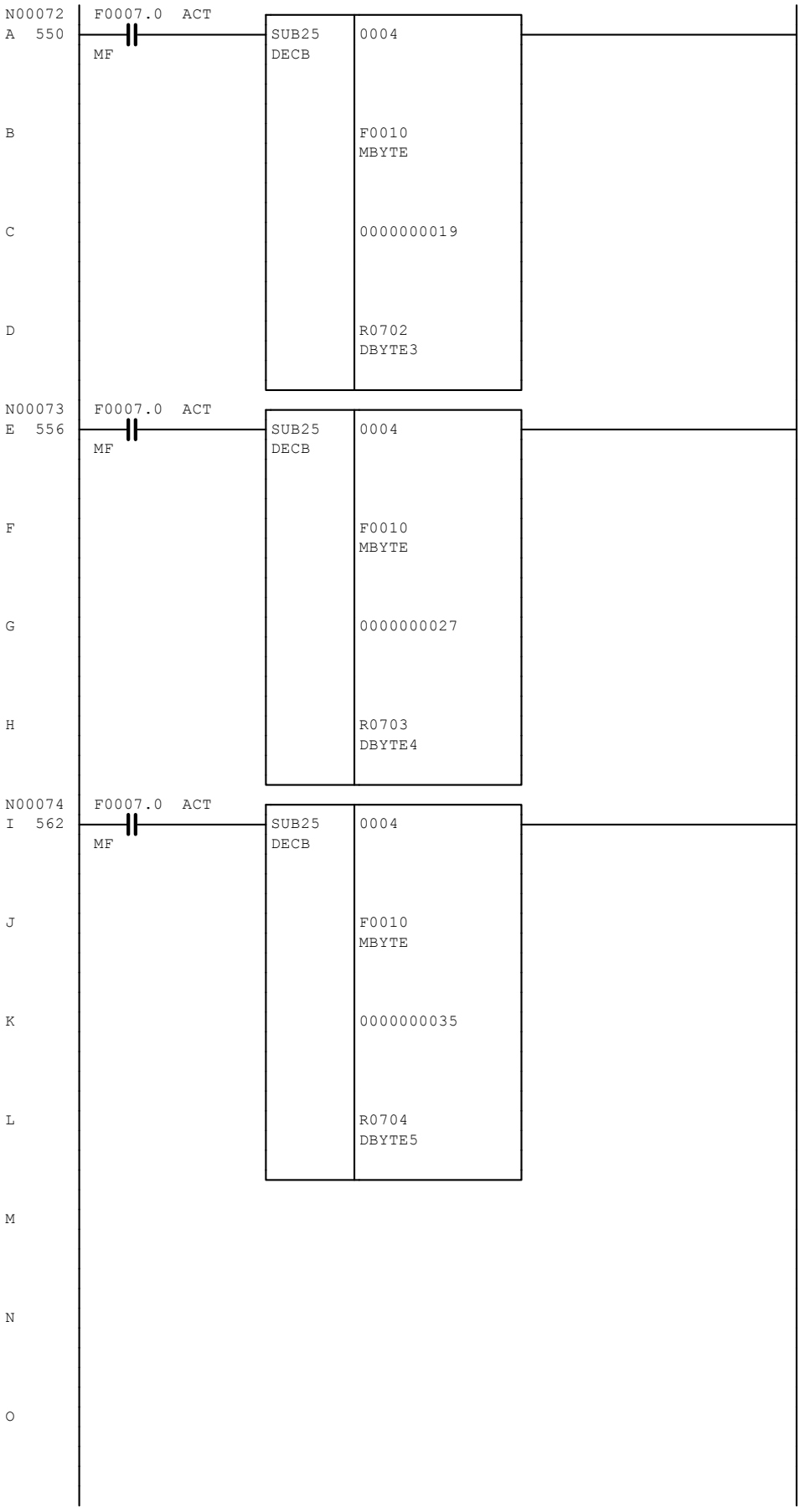
N00072
A 550
F0007.0 ACT
MF
SUB25
DECB
0004
B
F0010
MBYTE
C
0000000019
D
R0702
DBYTE3
N00073
E 556
F0007.0 ACT
MF
SUB25
DECB
0004
F
F0010
MBYTE
G
0000000027
H
R0703
DBYTE4
N00074
I 562
F0007.0 ACT
MF
SUB25
DECB
0004
J
F0010
MBYTE
K
0000000035
L
R0704
DBYTE5
M
N
O

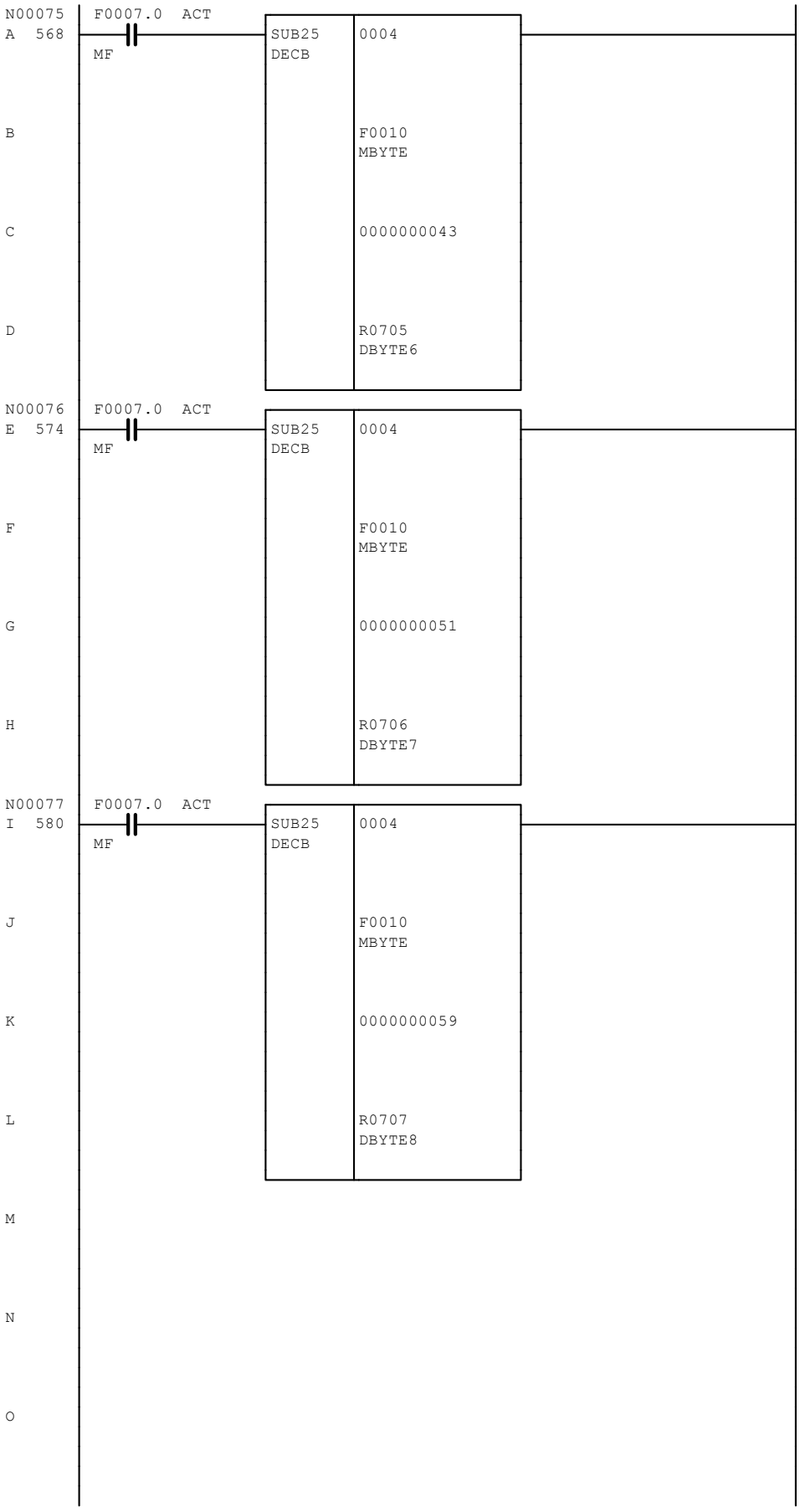
N00075
A 568
F0007.0 ACT
MF
SUB25
DECB
0004
B
F0010
MBYTE
C
0000000043
D
R0705
DBYTE6
N00076
E 574
F0007.0 ACT
MF
SUB25
DECB
0004
F
F0010
MBYTE
G
0000000051
H
R0706
DBYTE7
N00077
I 580
F0007.0 ACT
MF
SUB25
DECB
0004
J
F0010
MBYTE
K
0000000059
L
R0707
DBYTE8
M
N
O

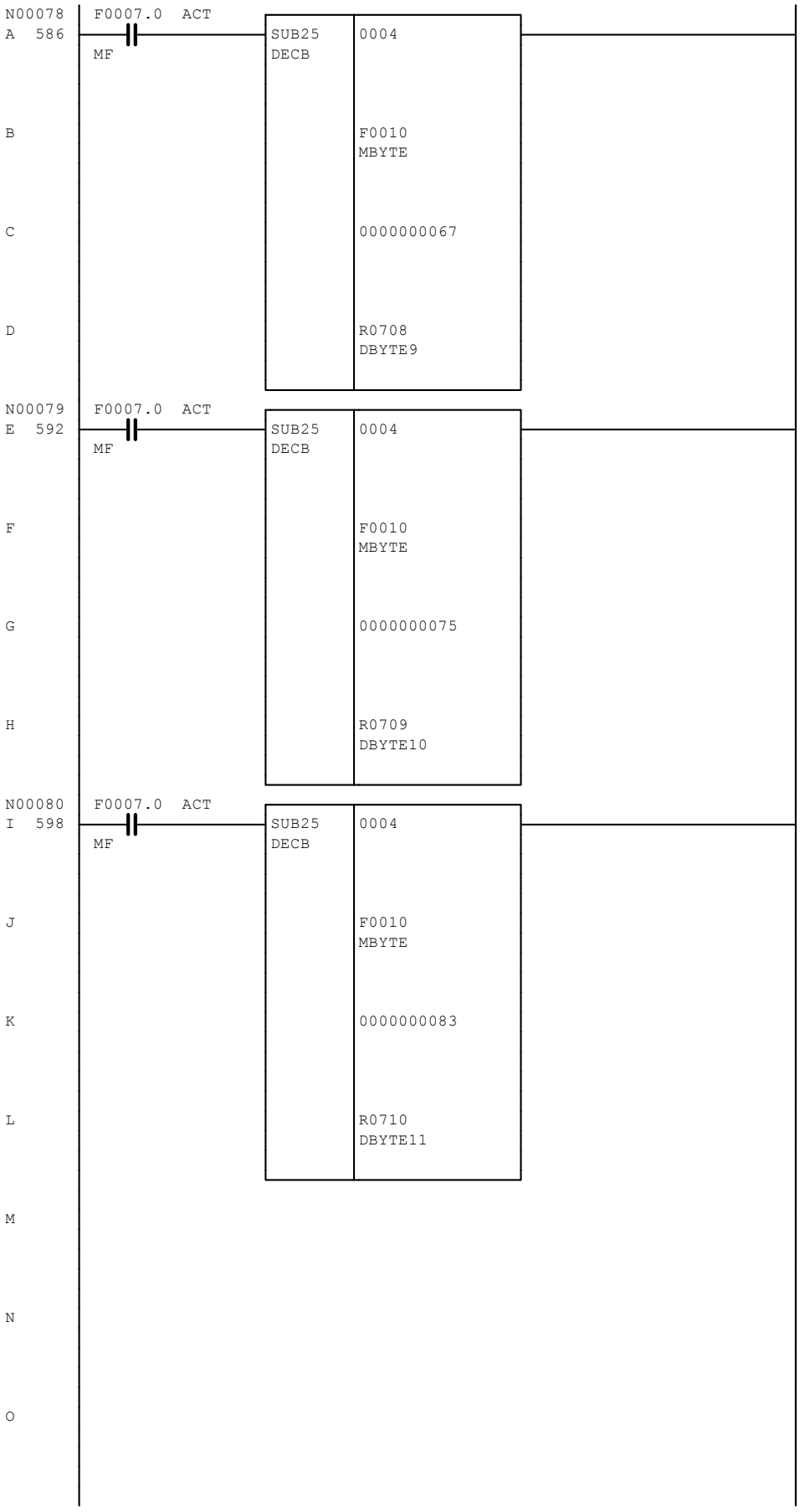
N00078
A 586
F0007.0 ACT
MF
SUB25
DECB
0004
B
F0010
MBYTE
C
0000000067
D
R0708
DBYTE9
N00079
E 592
F0007.0 ACT
MF
SUB25
DECB
0004
F
F0010
MBYTE
G
0000000075
H
R0709
DBYTE10
N00080
I 598
F0007.0 ACT
MF
SUB25
DECB
0004
J
F0010
MBYTE
K
0000000083
L
R0710
DBYTE11
M
N
O

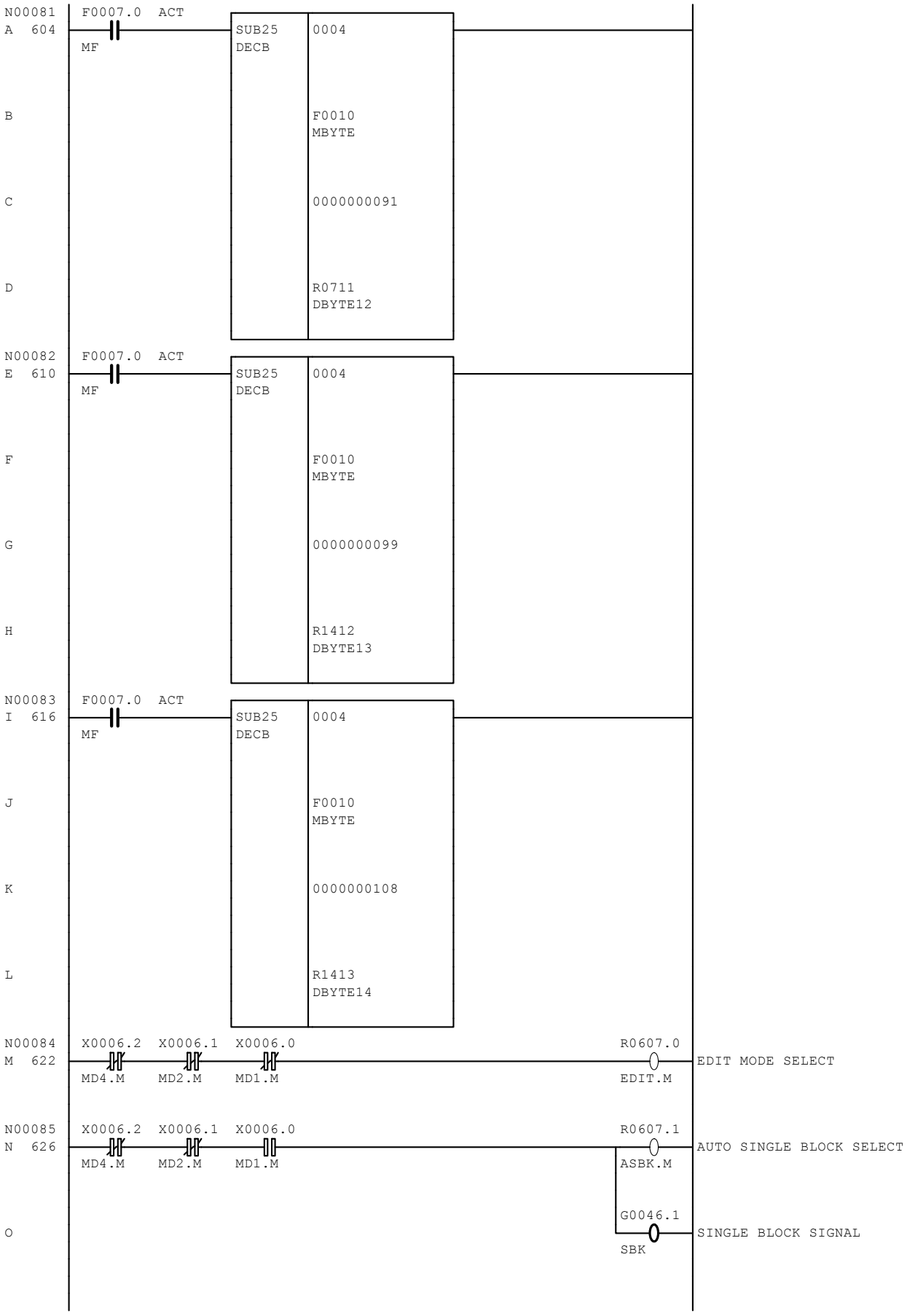
N00081
A 604
F0007.0 ACT
MF
SUB25
DECB
0004
B
F0010
MBYTE
C
0000000091
D
R0711
DBYTE12
N00082
E 610
F0007.0 ACT
MF
SUB25
DECB
0004
F
F0010
MBYTE
G
0000000099
H
R1412
DBYTE13
N00083
I 616
F0007.0 ACT
MF
SUB25
DECB
0004
J
F0010
MBYTE
K
0000000108
L
R1413
DBYTE14
N00084
M 622
X0006.2 X0006.1 X0006.0
MD4.M MD2.M MD1.M
R0607.0
EDIT.M
EDIT MODE SELECT
N00085
N 626
X0006.2 X0006.1 X0006.0
MD4.M MD2.M MD1.M
R0607.1
ASBK.M
AUTO SINGLE BLOCK SELECT
O
G0046.1
SBK
SINGLE BLOCK SIGNAL

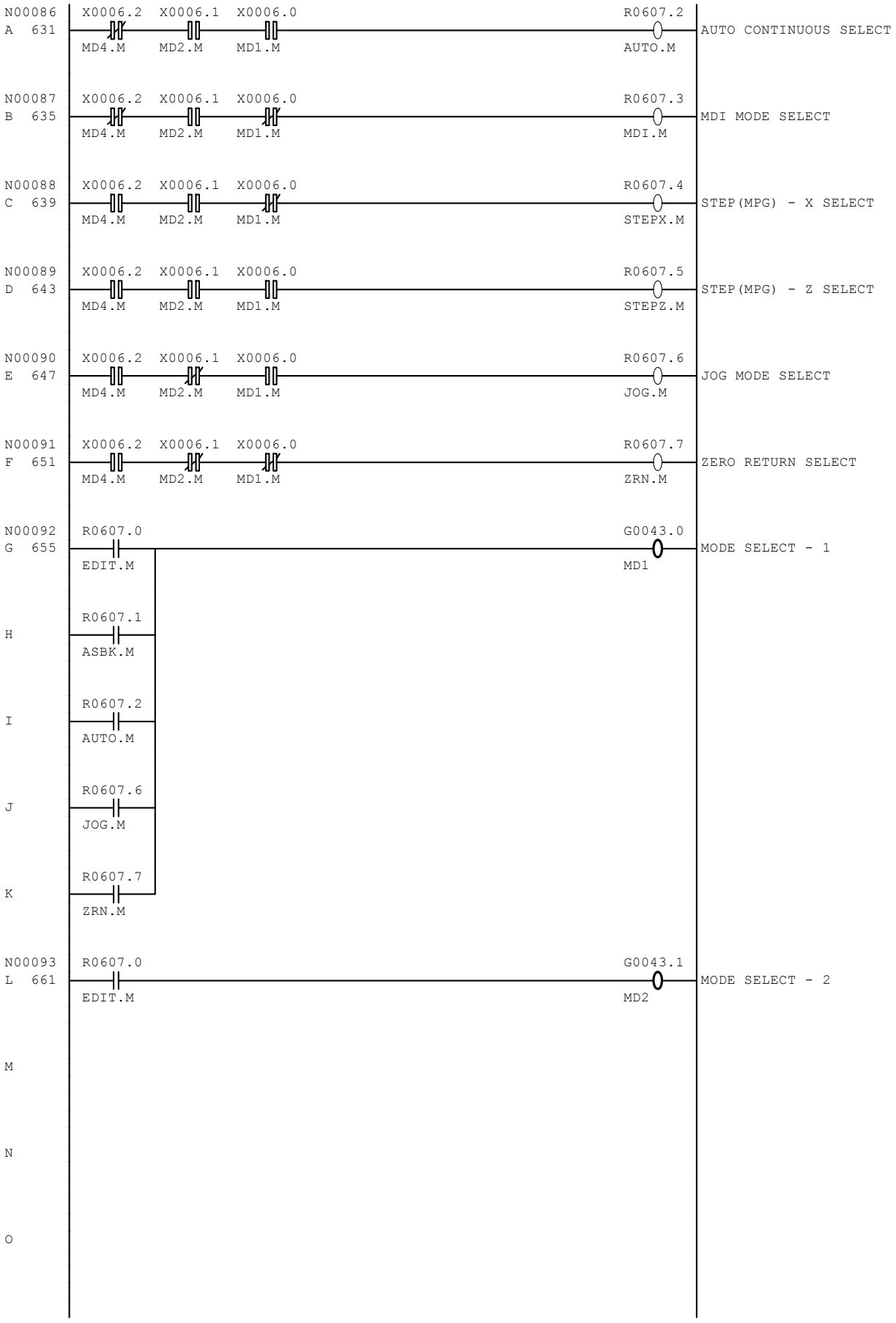
N00086
A 631
X0006.2 X0006.1 X0006.0
MD4.M MD2.M MD1.M
R0607.2
AUTO.M
AUTO CONTINUOUS SELECT
N00087
B 635
X0006.2 X0006.1 X0006.0
MD4.M MD2.M MD1.M
R0607.3
MDI.M
MDI MODE SELECT
N00088
C 639
X0006.2 X0006.1 X0006.0
MD4.M MD2.M MD1.M
R0607.4
STEPX.M
STEP(MPG) - X SELECT
N00089
D 643
X0006.2 X0006.1 X0006.0
MD4.M MD2.M MD1.M
R0607.5
STEPZ.M
STEP(MPG) - Z SELECT
N00090
E 647
X0006.2 X0006.1 X0006.0
MD4.M MD2.M MD1.M
R0607.6
JOG.M
JOG MODE SELECT
N00091
F 651
X0006.2 X0006.1 X0006.0
MD4.M MD2.M MD1.M
R0607.7
ZRN.M
ZERO RETURN SELECT
N00092
G 655
R0607.0
EDIT.M
G0043.0
MD1
MODE SELECT - 1
H
R0607.1
ASBK.M
I
R0607.2
AUTO.M
J
R0607.6
JOG.M
K
R0607.7
ZRN.M
N00093
L 661
R0607.0
EDIT.M
G0043.1
MD2
MODE SELECT - 2
M
N
O

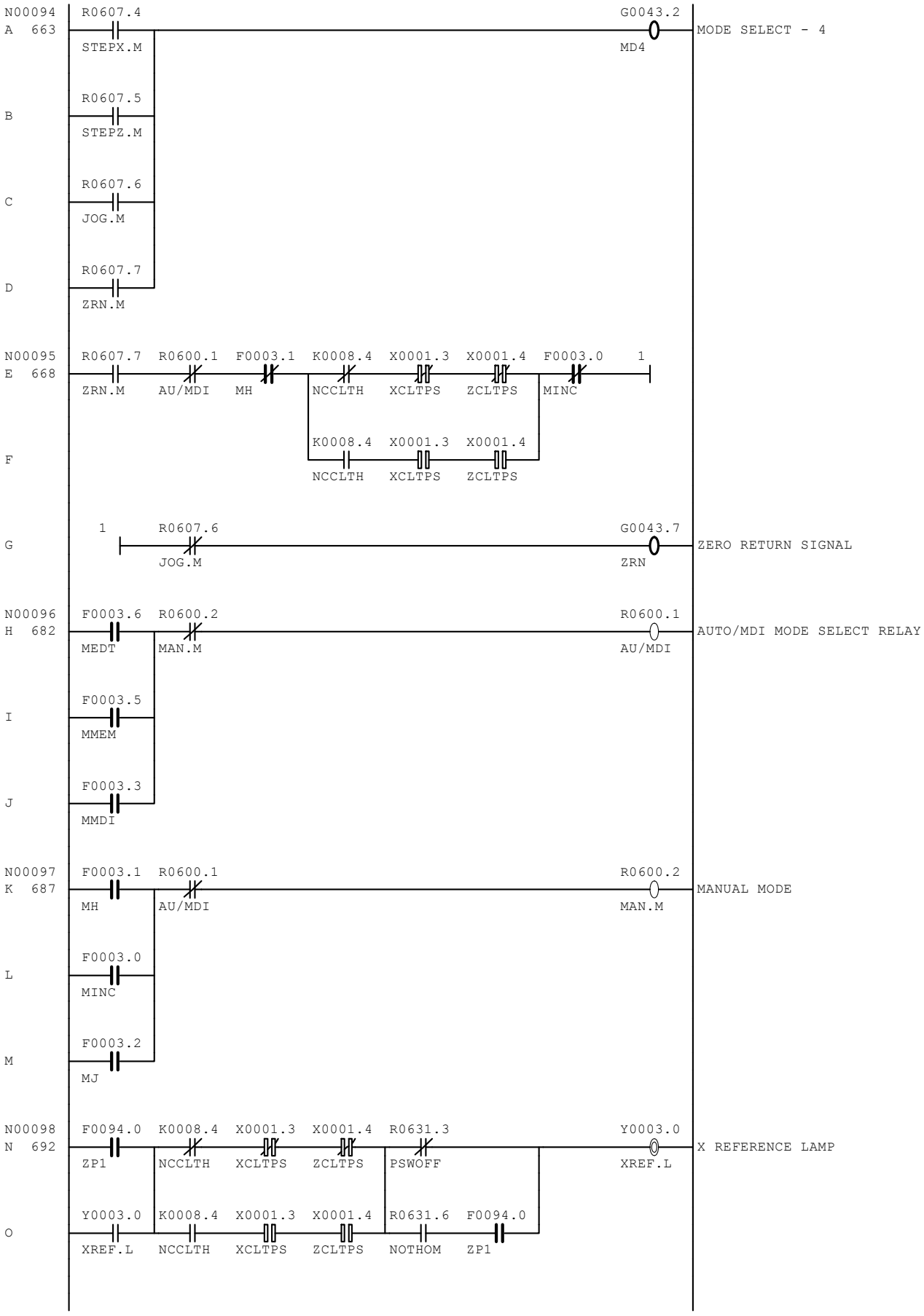
N00094
A 663
R0607.4
STEPX.M
G0043.2
MD4
MODE SELECT - 4
B
R0607.5
STEPZ.M
C
R0607.6
JOG.M
D
R0607.7
ZRN.M
N00095
E 668
R0607.7
ZRN.M
R0600.1
AU/MDI
F0003.1
MH
K0008.4
NCCLTH
X0001.3
XCLTPS
X0001.4
ZCLTPS
F0003.0
MINC
1
F
K0008.4
NCCLTH
X0001.3
XCLTPS
X0001.4
ZCLTPS
G
1
R0607.6
JOG.M
G0043.7
ZRN
ZERO RETURN SIGNAL
N00096
H 682
F0003.6
MEDT
R0600.2
MAN.M
R0600.1
AU/MDI
AUTO/MDI MODE SELECT RELAY
I
F0003.5
MMEM
J
F0003.3
MMDI
N00097
K 687
F0003.1
MH
R0600.1
AU/MDI
R0600.2
MAN.M
MANUAL MODE
L
F0003.0
MINC
M
F0003.2
MJ
N00098
N 692
F0094.0
ZP1
K0008.4
NCCLTH
X0001.3
XCLTPS
X0001.4
ZCLTPS
R0631.3
PSWOFF
Y0003.0
XREF.L
X REFERENCE LAMP
O
Y0003.0
XREF.L
K0008.4
NCCLTH
X0001.3
XCLTPS
X0001.4
ZCLTPS
R0631.6
NOTHOM
F0094.0
ZP1

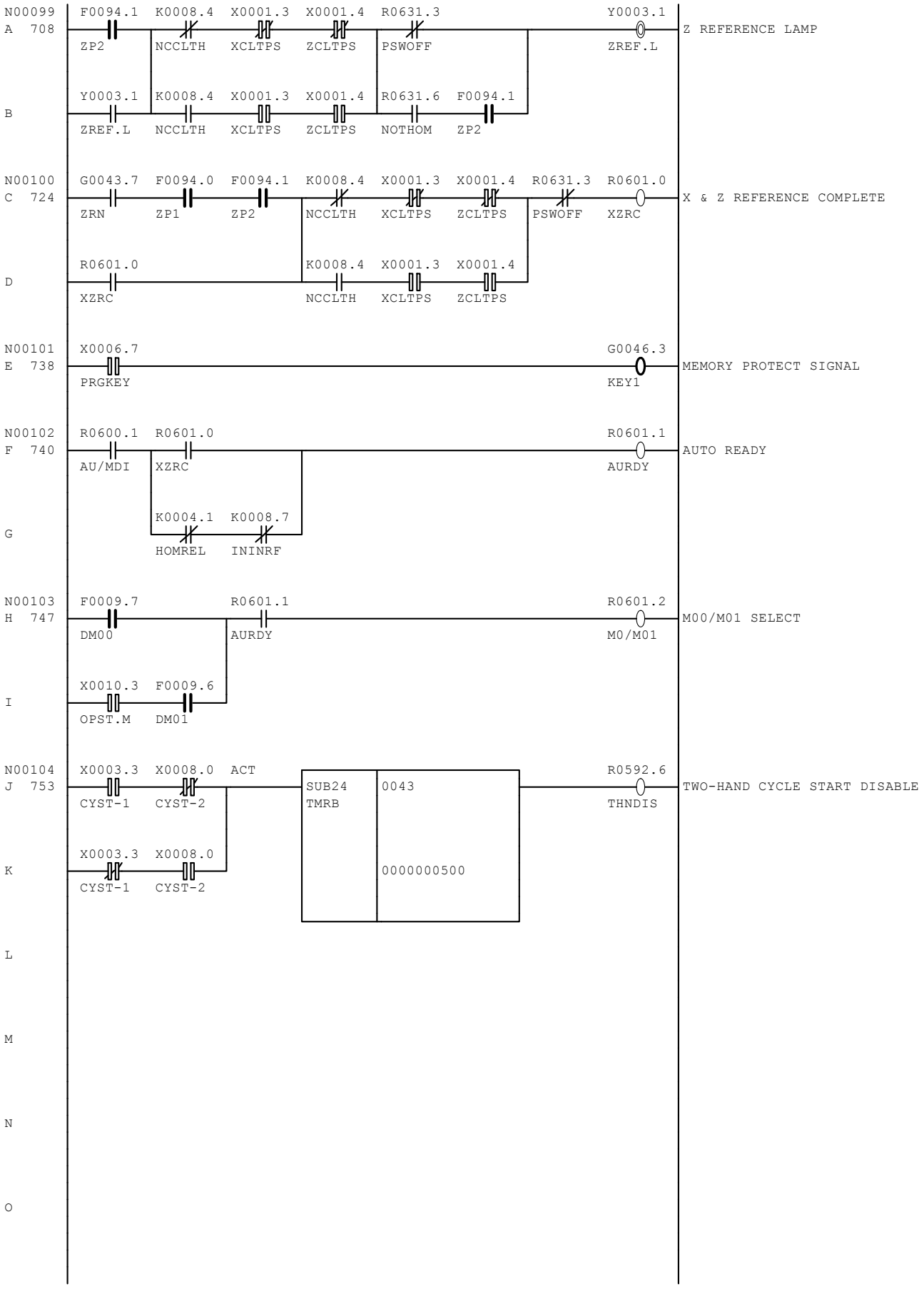
N00099
A 708
F0094.1
ZP2
K0008.4
NCCLTH
X0001.3
XCLTPS
X0001.4
ZCLTPS
R0631.3
PSWOFF
Y0003.1
ZREF.L
Z REFERENCE LAMP
B
Y0003.1
ZREF.L
K0008.4
NCCLTH
X0001.3
XCLTPS
X0001.4
ZCLTPS
R0631.6
NOTHOM
F0094.1
ZP2
N00100
C 724
G0043.7
ZRN
F0094.0
ZP1
F0094.1
ZP2
K0008.4
NCCLTH
X0001.3
XCLTPS
X0001.4
ZCLTPS
R0631.3
PSWOFF
R0601.0
XZRC
X & Z REFERENCE COMPLETE
D
R0601.0
XZRC
K0008.4
NCCLTH
X0001.3
XCLTPS
X0001.4
ZCLTPS
N00101
E 738
X0006.7
PRGKEY
G0046.3
KEY1
MEMORY PROTECT SIGNAL
N00102
F 740
R0600.1
AU/MDI
R0601.0
XZRC
R0601.1
AURDY
AUTO READY
G
K0004.1
HOMREL
K0008.7
ININRF
N00103
H 747
F0009.7
DM00
R0601.1
AURDY
R0601.2
M0/M01
M00/M01 SELECT
I
X0010.3
OPST.M
F0009.6
DM01
N00104
J 753
X0003.3
CYST-1
X0008.0
CYST-2
ACT
SUB24
TMRB
0043
0000000500
R0592.6
THNDIS
TWO-HAND CYCLE START DISABLE
K
X0003.3
CYST-1
X0008.0
CYST-2
L
M
N
O

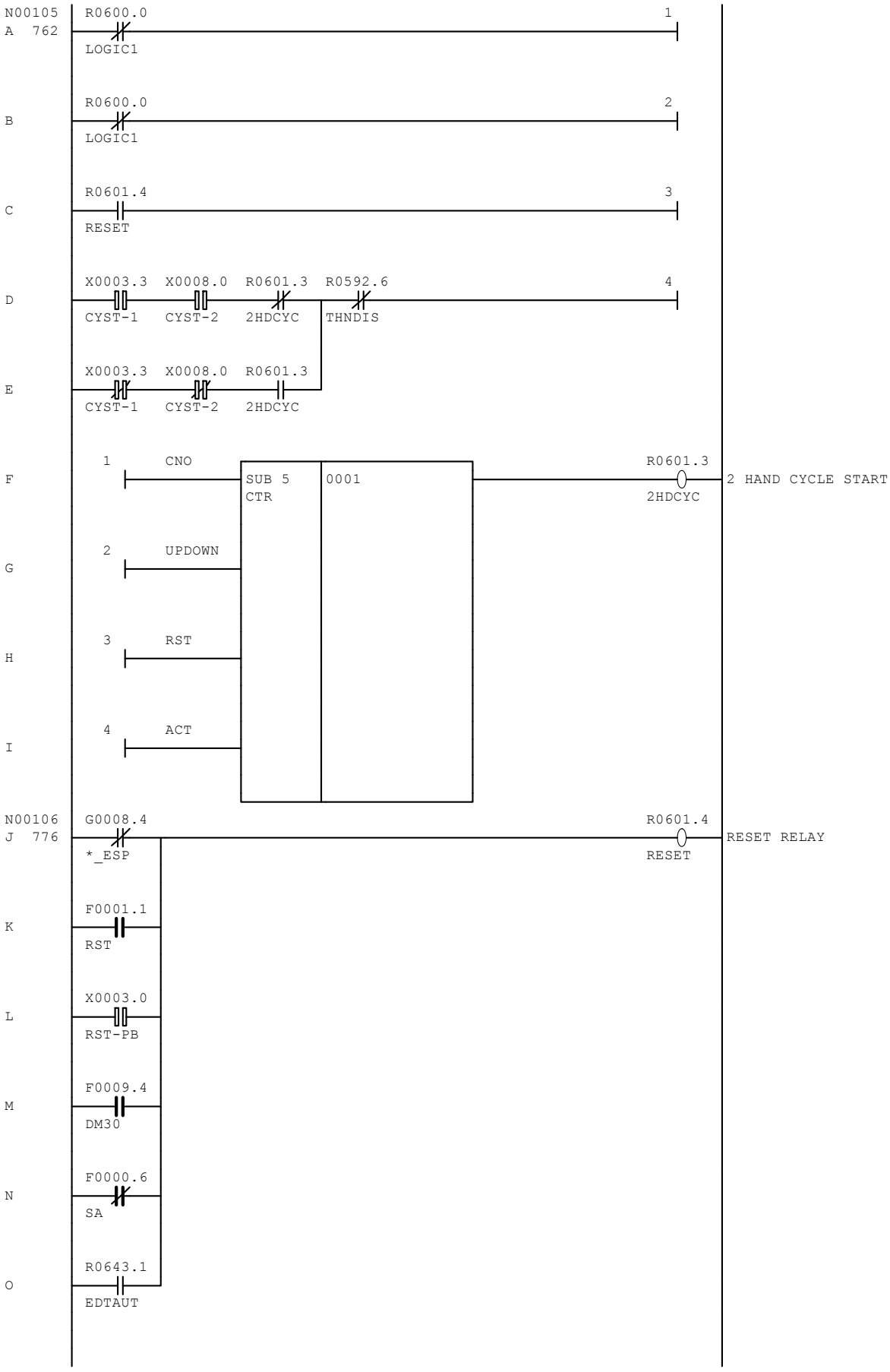
N00105
A 762
R0600.0
LOGIC1
1
B
R0600.0
LOGIC1
2
C
R0601.4
RESET
3
D
X0003.3
CYST-1
X0008.0
CYST-2
R0601.3
2HDCYC
R0592.6
THNDIS
4
E
X0003.3
CYST-1
X0008.0
CYST-2
R0601.3
2HDCYC
F
1
CNO
SUB 5
CTR
0001
R0601.3
2HDCYC
2 HAND CYCLE START
G
2
UPDOWN
H
3
RST
I
4
ACT
N00106
J 776
G0008.4
*_ESP
R0601.4
RESET
RESET RELAY
K
F0001.1
RST
L
X0003.0
RST-PB
M
F0009.4
DM30
N
F0000.6
SA
O
R0643.1
EDTAUT

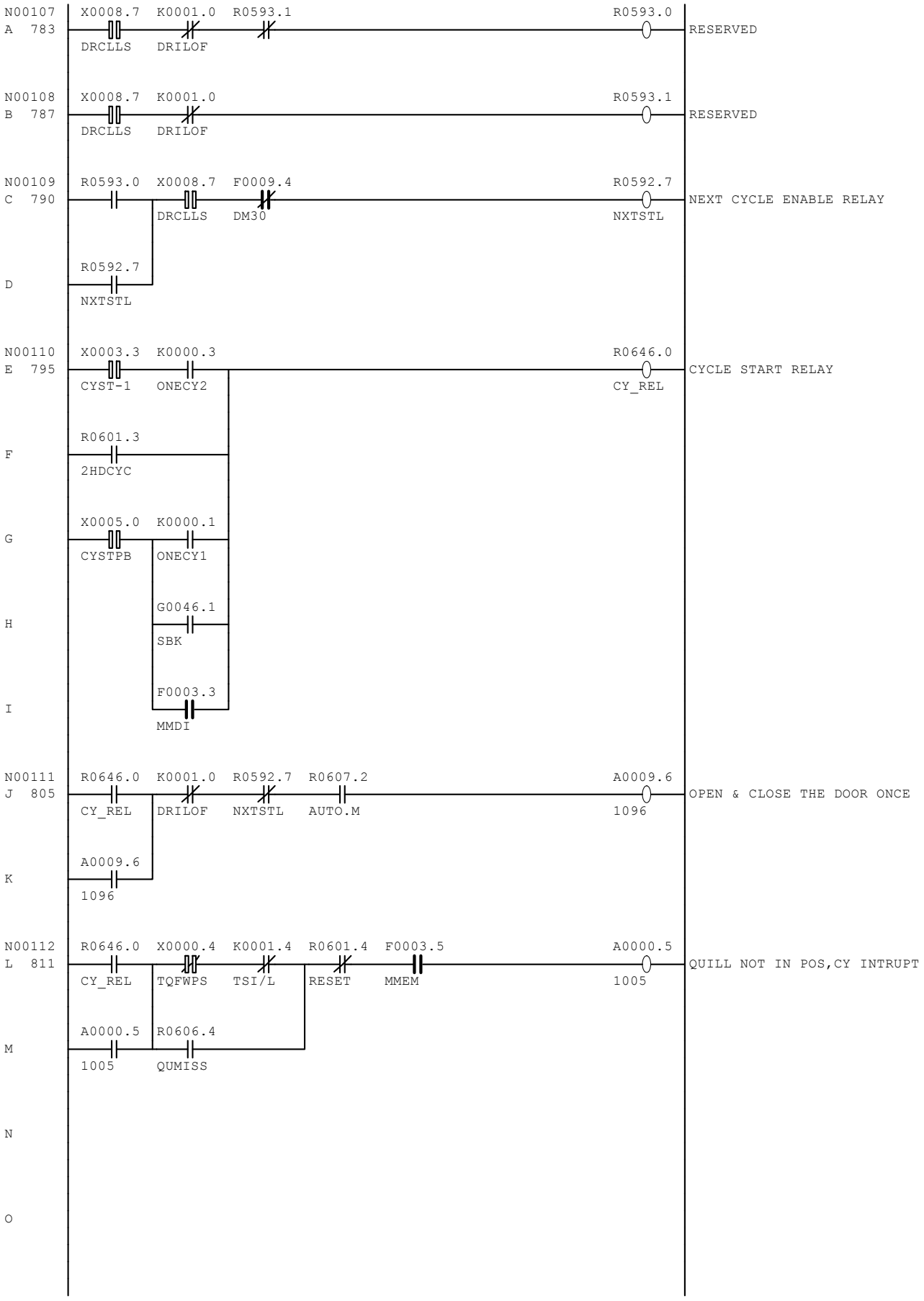
N00107
A 783
X0008.7
DRCLLS
K0001.0
DRILOF
R0593.1
R0593.0
RESERVED
N00108
B 787
X0008.7
DRCLLS
K0001.0
DRILOF
R0593.1
RESERVED
N00109
C 790
R0593.0
X0008.7
DRCLLS
F0009.4
DM30
R0592.7
NXTSTL
NEXT CYCLE ENABLE RELAY
D
R0592.7
NXTSTL
N00110
E 795
X0003.3
CYST-1
K0000.3
ONECY2
R0646.0
CY_REL
CYCLE START RELAY
F
R0601.3
2HDCYC
G
X0005.0
CYSTPB
K0000.1
ONECY1
H
G0046.1
SBK
I
F0003.3
MMDI
N00111
J 805
R0646.0
CY_REL
K0001.0
DRILOF
R0592.7
NXTSTL
R0607.2
AUTO.M
A0009.6
1096
OPEN & CLOSE THE DOOR ONCE
K
A0009.6
1096
N00112
L 811
R0646.0
CY_REL
X0000.4
TQFWPS
K0001.4
TSI/L
R0601.4
RESET
F0003.5
MMEM
A0000.5
1005
QUILL NOT IN POS,CY INTRUPT
M
A0000.5
1005
R0606.4
QUMISS
N
O

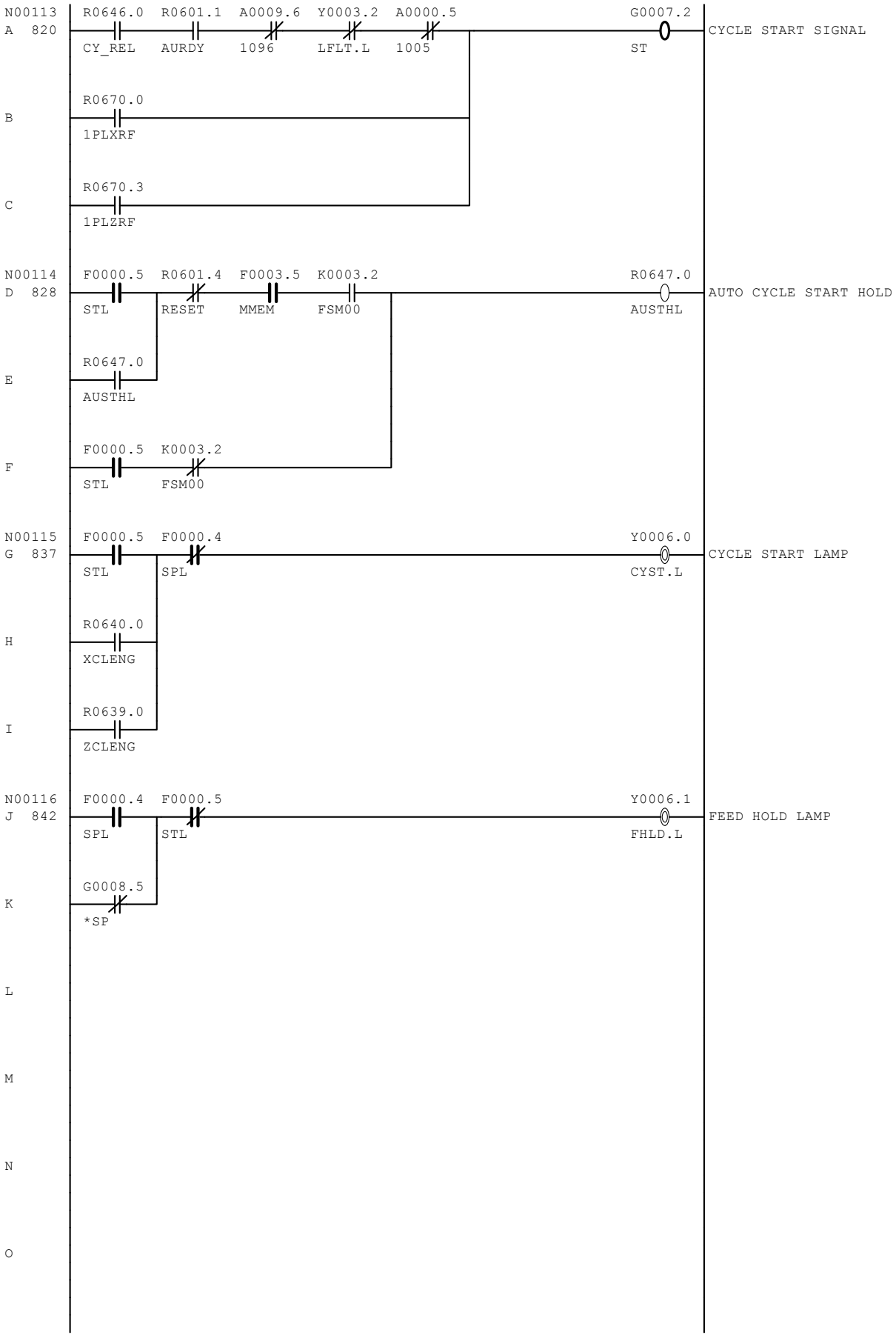
N00113
A 820
R0646.0
CY_REL
R0601.1
AURDY
A0009.6
1096
Y0003.2
LFLT.L
A0000.5
1005
G0007.2
ST
CYCLE START SIGNAL
B
R0670.0
1PLXRF
C
R0670.3
1PLZRF
N00114
D 828
F0000.5
STL
R0601.4
RESET
F0003.5
MMEM
K0003.2
FSM00
R0647.0
AUSTHL
AUTO CYCLE START HOLD
E
R0647.0
AUSTHL
F
F0000.5
STL
K0003.2
FSM00
N00115
G 837
F0000.5
STL
F0000.4
SPL
Y0006.0
CYST.L
CYCLE START LAMP
H
R0640.0
XCLENG
I
R0639.0
ZCLENG
N00116
J 842
F0000.4
SPL
F0000.5
STL
Y0006.1
FHLD.L
FEED HOLD LAMP
K
G0008.5
*SP
L
M
N
O

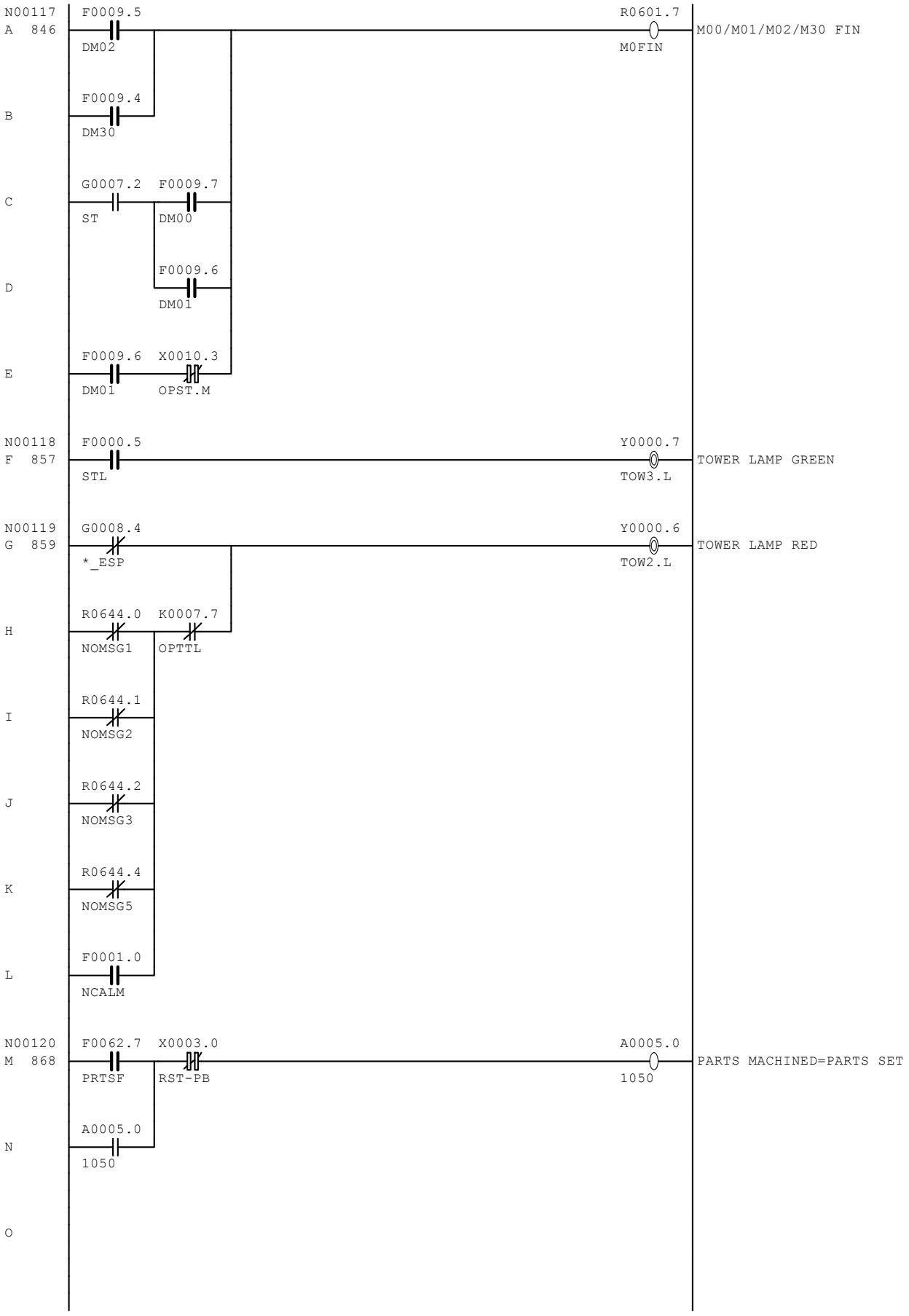
N00117
A 846
F0009.5
DM02
R0601.7
M0FIN
M00/M01/M02/M30 FIN
B
F0009.4
DM30
C
G0007.2
ST
F0009.7
DM00
D
F0009.6
DM01
E
F0009.6
DM01
X0010.3
OPST.M
N00118
F 857
F0000.5
STL
Y0000.7
TOW3.L
TOWER LAMP GREEN
N00119
G 859
G0008.4
*_ESP
Y0000.6
TOW2.L
TOWER LAMP RED
H
R0644.0
NOMSG1
K0007.7
OPTTL
I
R0644.1
NOMSG2
J
R0644.2
NOMSG3
K
R0644.4
NOMSG5
L
F0001.0
NCALM
N00120
M 868
F0062.7
PRTSF
X0003.0
RST-PB
A0005.0
1050
PARTS MACHINED=PARTS SET
N
A0005.0
1050
O

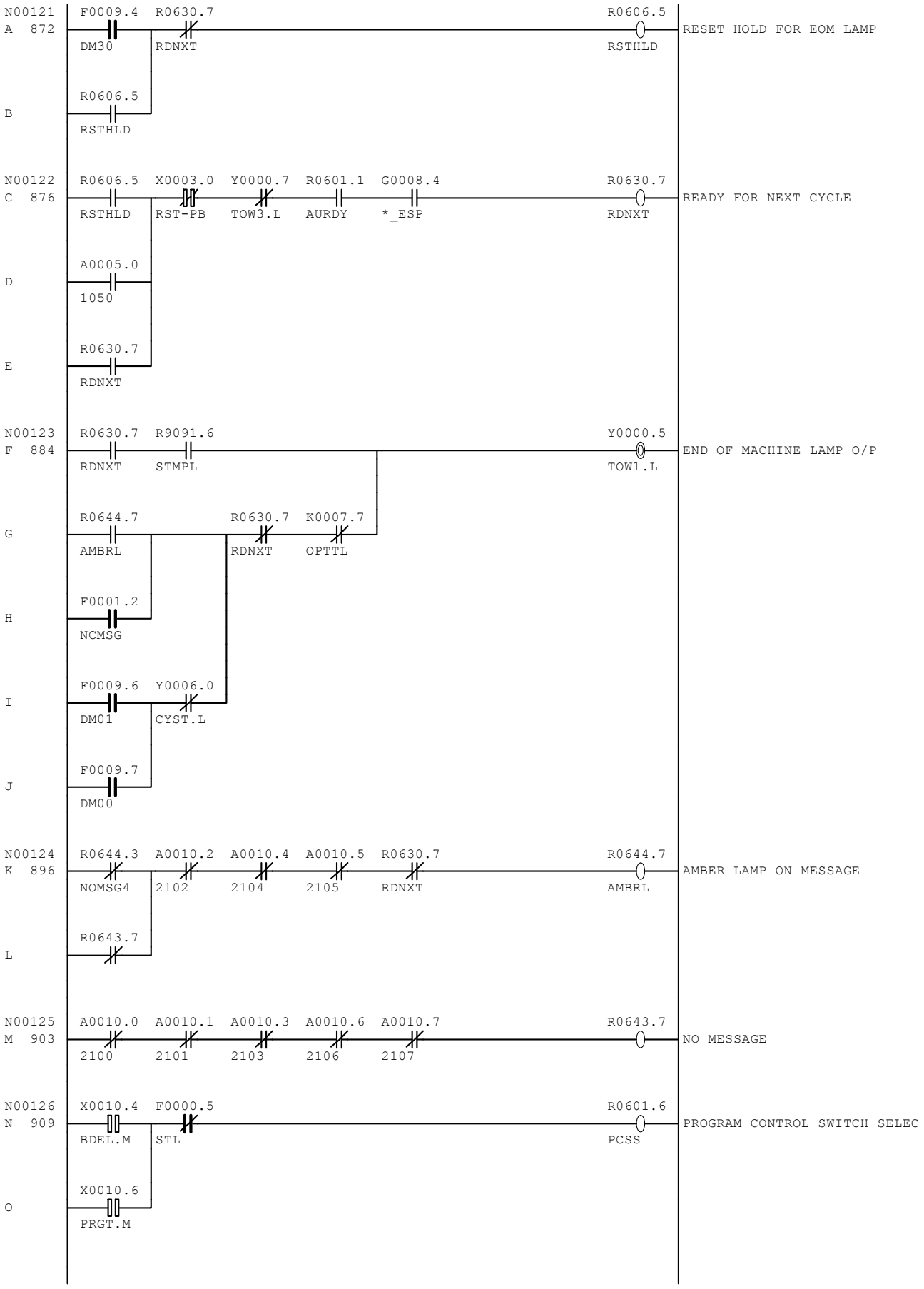
N00121
A 872
F0009.4
DM30
R0630.7
RDNXT
R0606.5
RSTHLD
RESET HOLD FOR EOM LAMP
B
R0606.5
RSTHLD
N00122
C 876
R0606.5
RSTHLD
X0003.0
RST-PB
Y0000.7
TOW3.L
R0601.1
AURDY
G0008.4
*_ESP
R0630.7
RDNXT
READY FOR NEXT CYCLE
D
A0005.0
1050
E
R0630.7
RDNXT
N00123
F 884
R0630.7
RDNXT
R9091.6
STMPL
Y0000.5
TOW1.L
END OF MACHINE LAMP O/P
G
R0644.7
AMBRL
R0630.7
RDNXT
K0007.7
OPTTL
H
F0001.2
NCMSG
I
F0009.6
DM01
Y0006.0
CYST.L
J
F0009.7
DM00
N00124
K 896
R0644.3
NOMSG4
A0010.2
2102
A0010.4
2104
A0010.5
2105
R0630.7
RDNXT
R0644.7
AMBRL
AMBER LAMP ON MESSAGE
L
R0643.7
N00125
M 903
A0010.0
2100
A0010.1
2101
A0010.3
2103
A0010.6
2106
A0010.7
2107
R0643.7
NO MESSAGE
N00126
N 909
X0010.4
BDEL.M
F0000.5
STL
R0601.6
PCSS
PROGRAM CONTROL SWITCH SELEC
O
X0010.6
PRGT.M

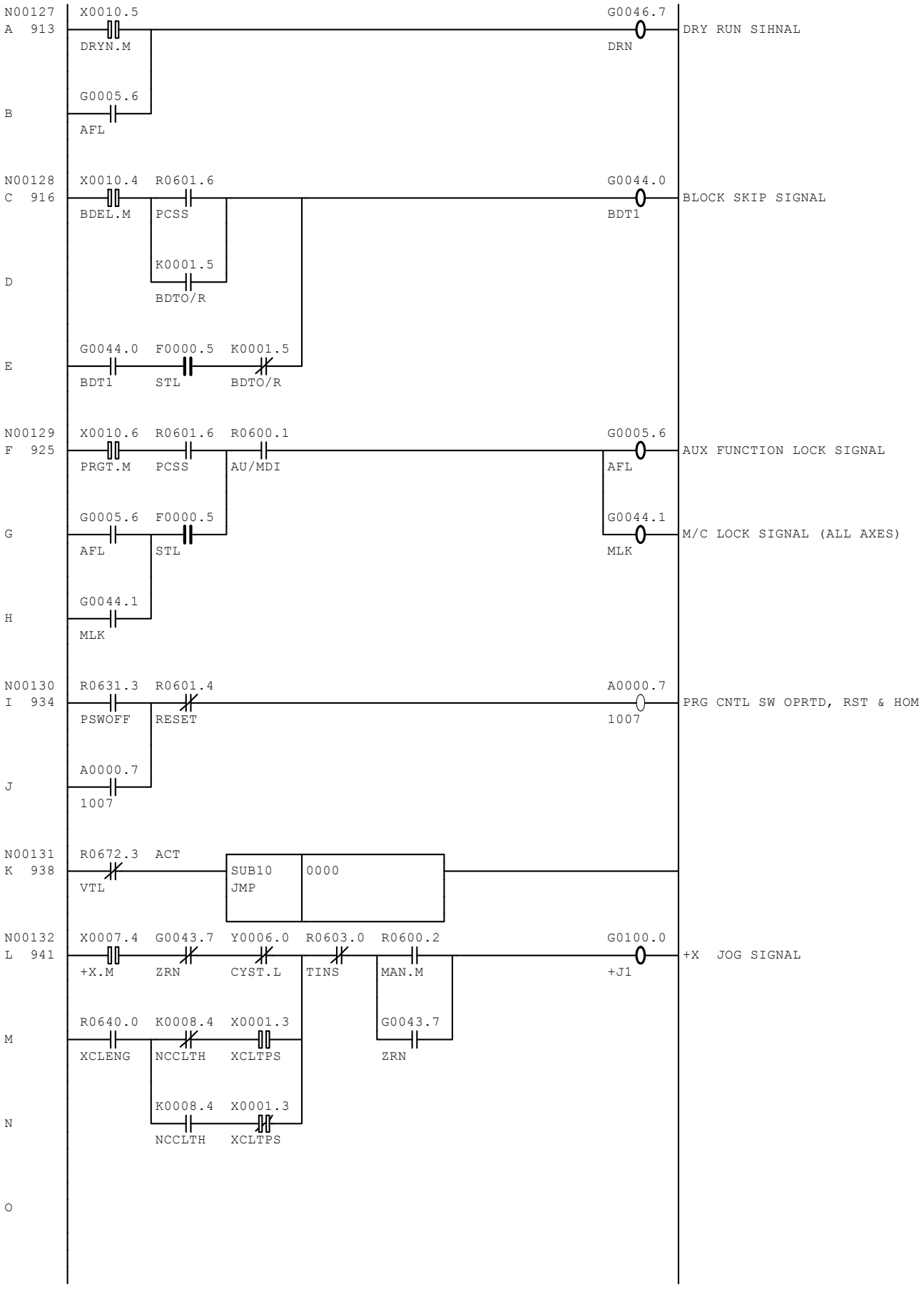
N00127
A 913
X0010.5
DRYN.M
G0005.6
B
AFL
G0046.7
DRN
DRY RUN SIHNAL
N00128
C 916
X0010.4
BDEL.M
R0601.6
PCSS
K0001.5
D
BDTO/R
G0044.0
BDT1
BLOCK SKIP SIGNAL
G0044.0
BDT1
F0000.5
STL
K0001.5
E
BDTO/R
N00129
F 925
X0010.6
PRGT.M
R0601.6
PCSS
R0600.1
AU/MDI
G0005.6
AFL
AUX FUNCTION LOCK SIGNAL
G0005.6
AFL
F0000.5
STL
G
G0044.1
MLK
M/C LOCK SIGNAL (ALL AXES)
G0044.1
H
MLK
N00130
I 934
R0631.3
PSWOFF
R0601.4
RESET
A0000.7
1007
PRG CNTL SW OPRTD, RST & HOM
A0000.7
J
1007
N00131
K 938
R0672.3
VTL
ACT
SUB10
JMP
0000
N00132
L 941
X0007.4
+X.M
G0043.7
ZRN
Y0006.0
CYST.L
R0603.0
TINS
R0600.2
MAN.M
G0100.0
+J1
+X JOG SIGNAL
R0640.0
XCLENG
K0008.4
NCCLTH
X0001.3
XCLTPS
G0043.7
ZRN
M
K0008.4
NCCLTH
X0001.3
XCLTPS
N
O

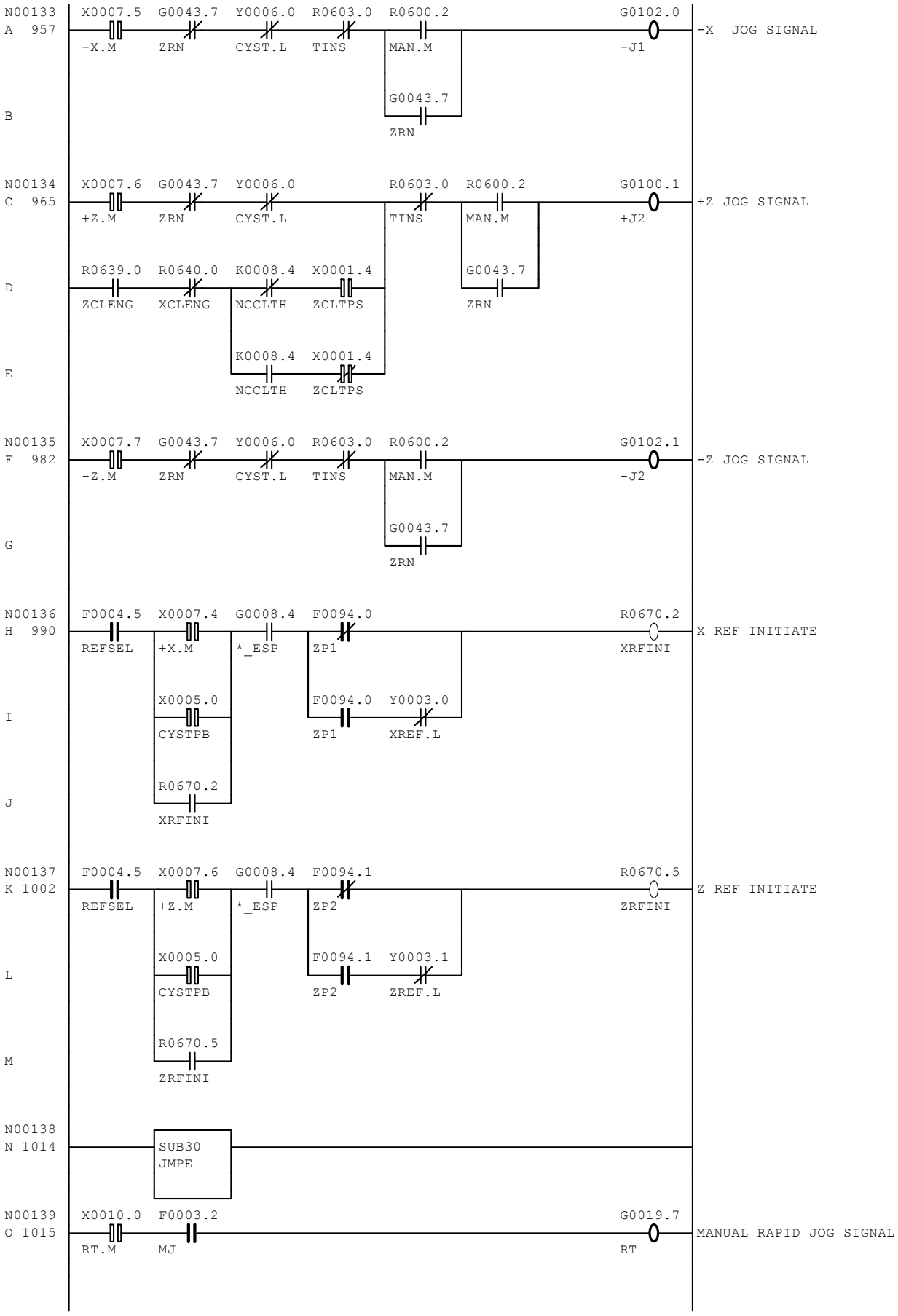
N00133
A 957
X0007.5
-X.M
G0043.7
ZRN
Y0006.0
CYST.L
R0603.0
TINS
R0600.2
MAN.M
G0043.7
ZRN
G0102.0
-J1
-X JOG SIGNAL
B
N00134
C 965
X0007.6
+Z.M
G0043.7
ZRN
Y0006.0
CYST.L
R0603.0
TINS
R0600.2
MAN.M
G0043.7
ZRN
G0100.1
+J2
+Z JOG SIGNAL
D
R0639.0
ZCLENG
R0640.0
XCLENG
K0008.4
NCCLTH
X0001.4
ZCLTPS
E
K0008.4
NCCLTH
X0001.4
ZCLTPS
N00135
F 982
X0007.7
-Z.M
G0043.7
ZRN
Y0006.0
CYST.L
R0603.0
TINS
R0600.2
MAN.M
G0043.7
ZRN
G0102.1
-J2
-Z JOG SIGNAL
G
N00136
H 990
F0004.5
REFSEL
X0007.4
+X.M
G0008.4
*_ESP
F0094.0
ZP1
R0670.2
XRFINI
X REF INITIATE
X0005.0
CYSTPB
F0094.0
ZP1
Y0003.0
XREF.L
I
R0670.2
XRFINI
J
N00137
K 1002
F0004.5
REFSEL
X0007.6
+Z.M
G0008.4
*_ESP
F0094.1
ZP2
R0670.5
ZRFINI
Z REF INITIATE
X0005.0
CYSTPB
F0094.1
ZP2
Y0003.1
ZREF.L
L
R0670.5
ZRFINI
M
N00138
N 1014
SUB30
JMPE
N00139
O 1015
X0010.0
RT.M
F0003.2
MJ
G0019.7
RT
MANUAL RAPID JOG SIGNAL

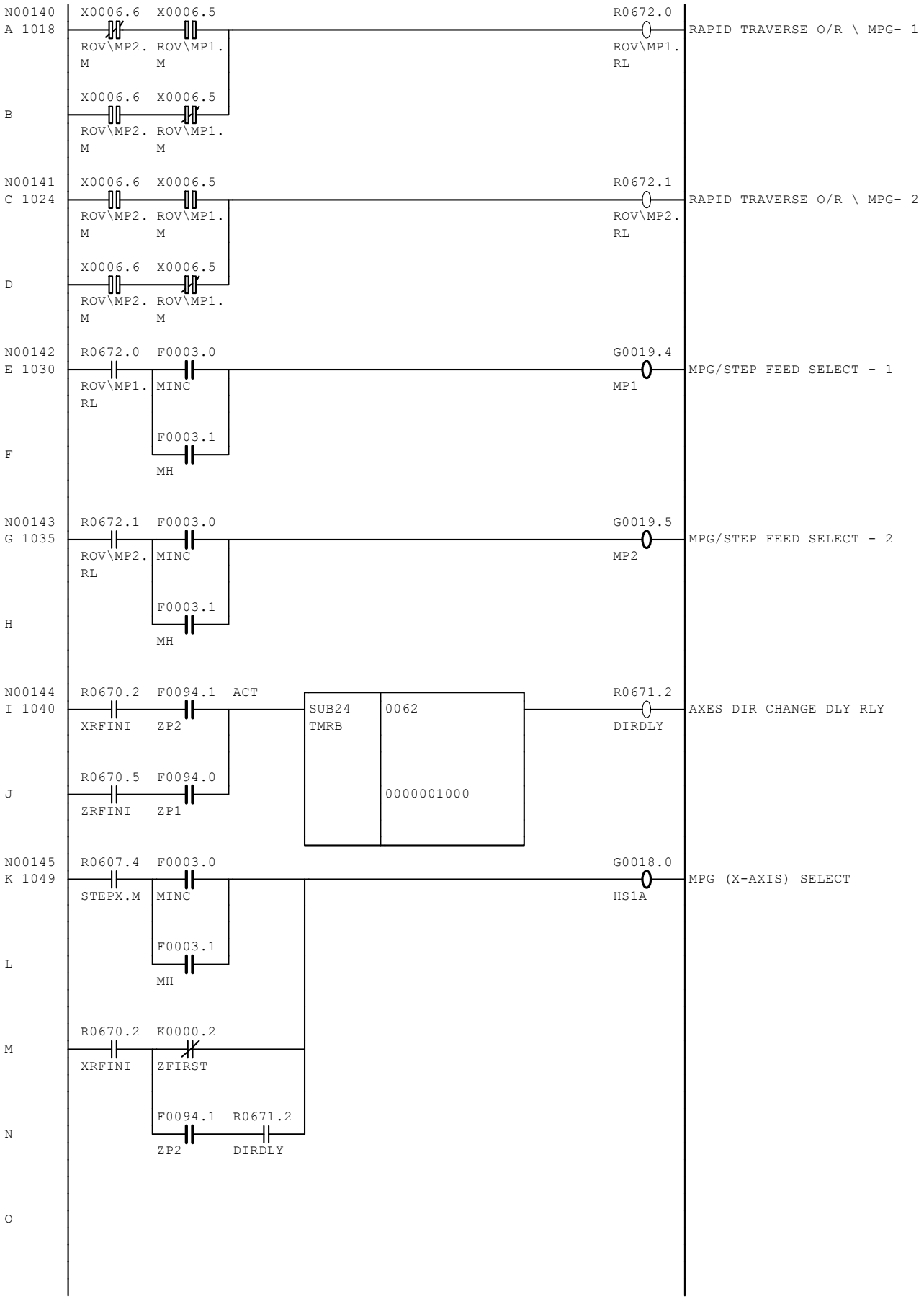
N00140
A 1018
X0006.6
ROV\MP2.
M
X0006.5
ROV\MP1.
M
R0672.0
ROV\MP1.
RL
RAPID TRAVERSE O/R \ MPG- 1
B
X0006.6
ROV\MP2.
M
X0006.5
ROV\MP1.
M
N00141
C 1024
X0006.6
ROV\MP2.
M
X0006.5
ROV\MP1.
M
R0672.1
ROV\MP2.
RL
RAPID TRAVERSE O/R \ MPG- 2
D
X0006.6
ROV\MP2.
M
X0006.5
ROV\MP1.
M
N00142
E 1030
R0672.0
ROV\MP1.
RL
F0003.0
MINC
G0019.4
MP1
MPG/STEP FEED SELECT - 1
F
F0003.1
MH
N00143
G 1035
R0672.1
ROV\MP2.
RL
F0003.0
MINC
G0019.5
MP2
MPG/STEP FEED SELECT - 2
H
F0003.1
MH
N00144
I 1040
R0670.2
XRFINI
F0094.1
ZP2
ACT
SUB24
TMRB
0062
0000001000
R0671.2
DIRDLY
AXES DIR CHANGE DLY RLY
J
R0670.5
ZRFINI
F0094.0
ZP1
N00145
K 1049
R0607.4
STEPX.M
F0003.0
MINC
G0018.0
HS1A
MPG (X-AXIS) SELECT
L
F0003.1
MH
M
R0670.2
XRFINI
K0000.2
ZFIRST
N
F0094.1
ZP2
R0671.2
DIRDLY
O

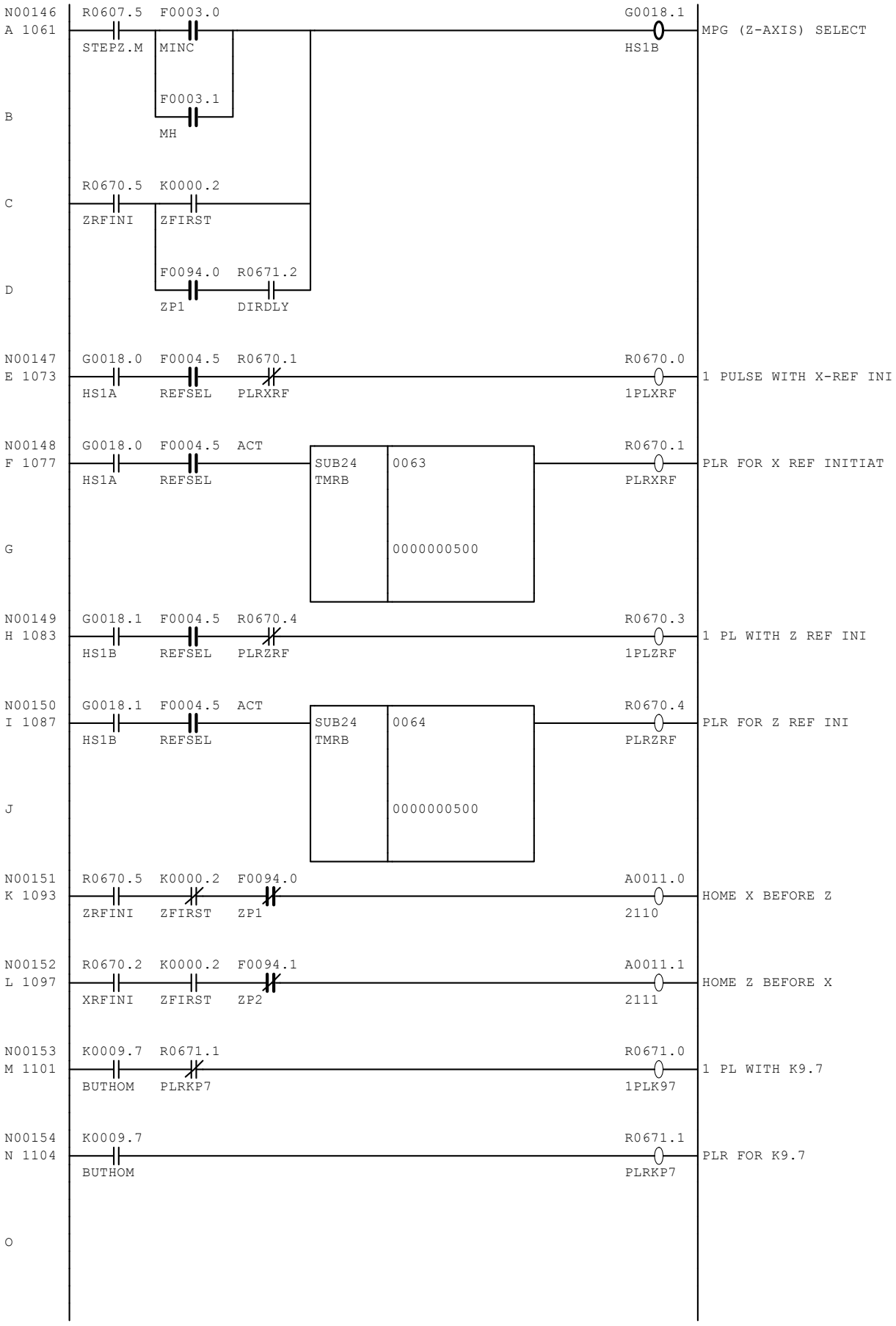
N00146
A 1061
R0607.5
STEPZ.M
F0003.0
MINC
F0003.1
MH
G0018.1
HS1B
MPG (Z-AXIS) SELECT
B
R0670.5
ZRFINI
K0000.2
ZFIRST
C
F0094.0
ZP1
R0671.2
DIRDLY
D
N00147
E 1073
G0018.0
HS1A
F0004.5
REFSEL
R0670.1
PLRXRF
R0670.0
1PLXRF
1 PULSE WITH X-REF INI
N00148
F 1077
G0018.0
HS1A
F0004.5
REFSEL
ACT
SUB24
TMRB
0063
0000000500
R0670.1
PLRXRF
PLR FOR X REF INITIAT
G
N00149
H 1083
G0018.1
HS1B
F0004.5
REFSEL
R0670.4
PLRZRF
R0670.3
1PLZRF
1 PL WITH Z REF INI
N00150
I 1087
G0018.1
HS1B
F0004.5
REFSEL
ACT
SUB24
TMRB
0064
0000000500
R0670.4
PLRZRF
PLR FOR Z REF INI
J
N00151
K 1093
R0670.5
ZRFINI
K0000.2
ZFIRST
F0094.0
ZP1
A0011.0
2110
HOME X BEFORE Z
N00152
L 1097
R0670.2
XRFINI
K0000.2
ZFIRST
F0094.1
ZP2
A0011.1
2111
HOME Z BEFORE X
N00153
M 1101
K0009.7
BUTHOM
R0671.1
PLRKP7
R0671.0
1PLK97
1 PL WITH K9.7
N00154
N 1104
K0009.7
BUTHOM
R0671.1
PLRKP7
PLR FOR K9.7
O

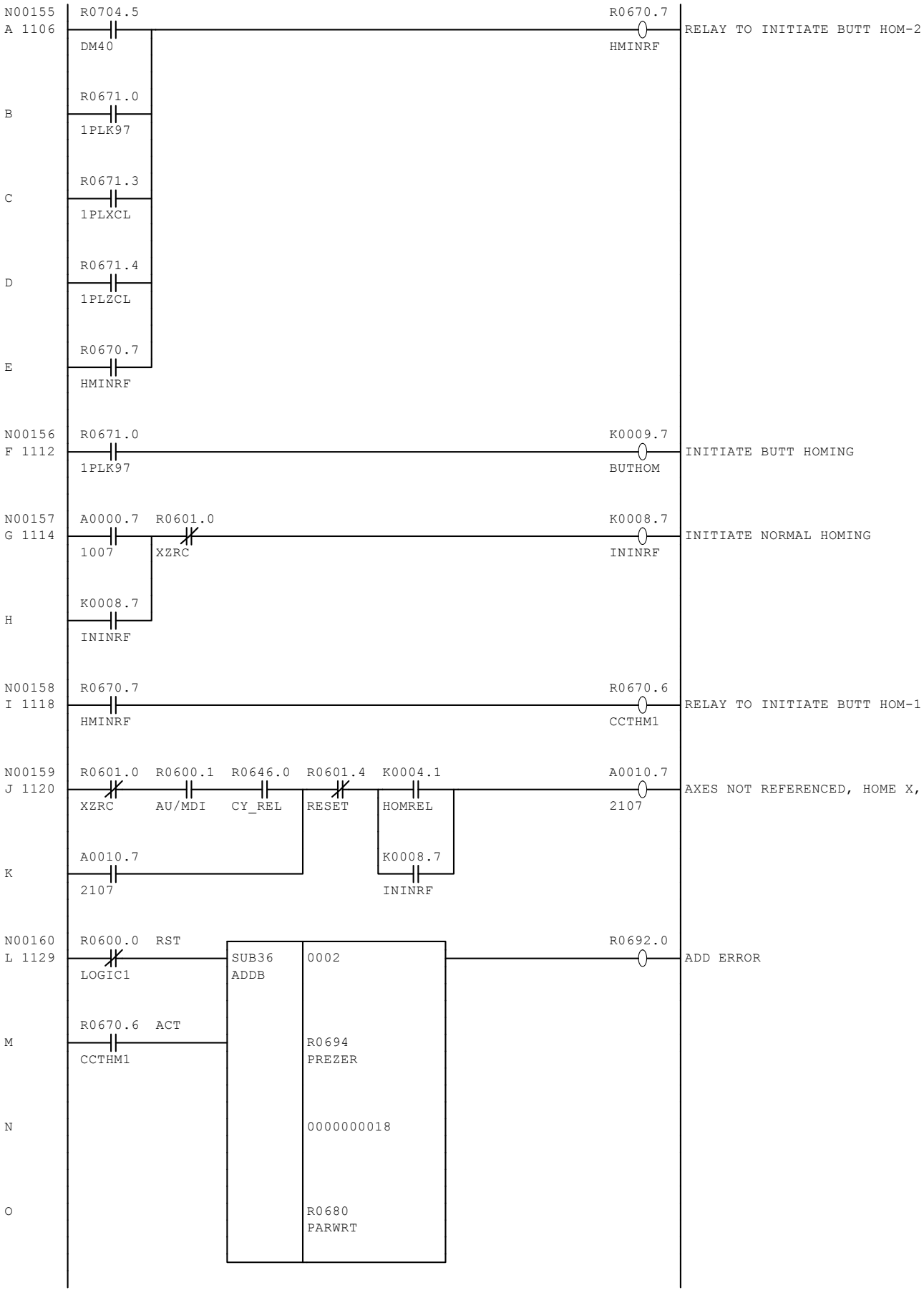
N00155
A 1106
R0704.5
DM40
R0670.7
HMINRF
RELAY TO INITIATE BUTT HOM-2
B
R0671.0
1PLK97
C
R0671.3
1PLXCL
D
R0671.4
1PLZCL
E
R0670.7
HMINRF
N00156
F 1112
R0671.0
1PLK97
K0009.7
BUTHOM
INITIATE BUTT HOMING
N00157
G 1114
A0000.7
1007
R0601.0
XZRC
K0008.7
ININRF
INITIATE NORMAL HOMING
H
K0008.7
ININRF
N00158
I 1118
R0670.7
HMINRF
R0670.6
CCTHM1
RELAY TO INITIATE BUTT HOM-1
N00159
J 1120
R0601.0
XZRC
R0600.1
AU/MDI
R0646.0
CY_REL
R0601.4
RESET
K0004.1
HOMREL
A0010.7
2107
AXES NOT REFERENCED, HOME X,
K
A0010.7
2107
K0008.7
ININRF
N00160
L 1129
R0600.0
RST
LOGIC1
SUB36
ADDB
0002
R0692.0
ADD ERROR
M
R0670.6
ACT
CCTHM1
R0694
PREZER
N
0000000018
O
R0680
PARWRT

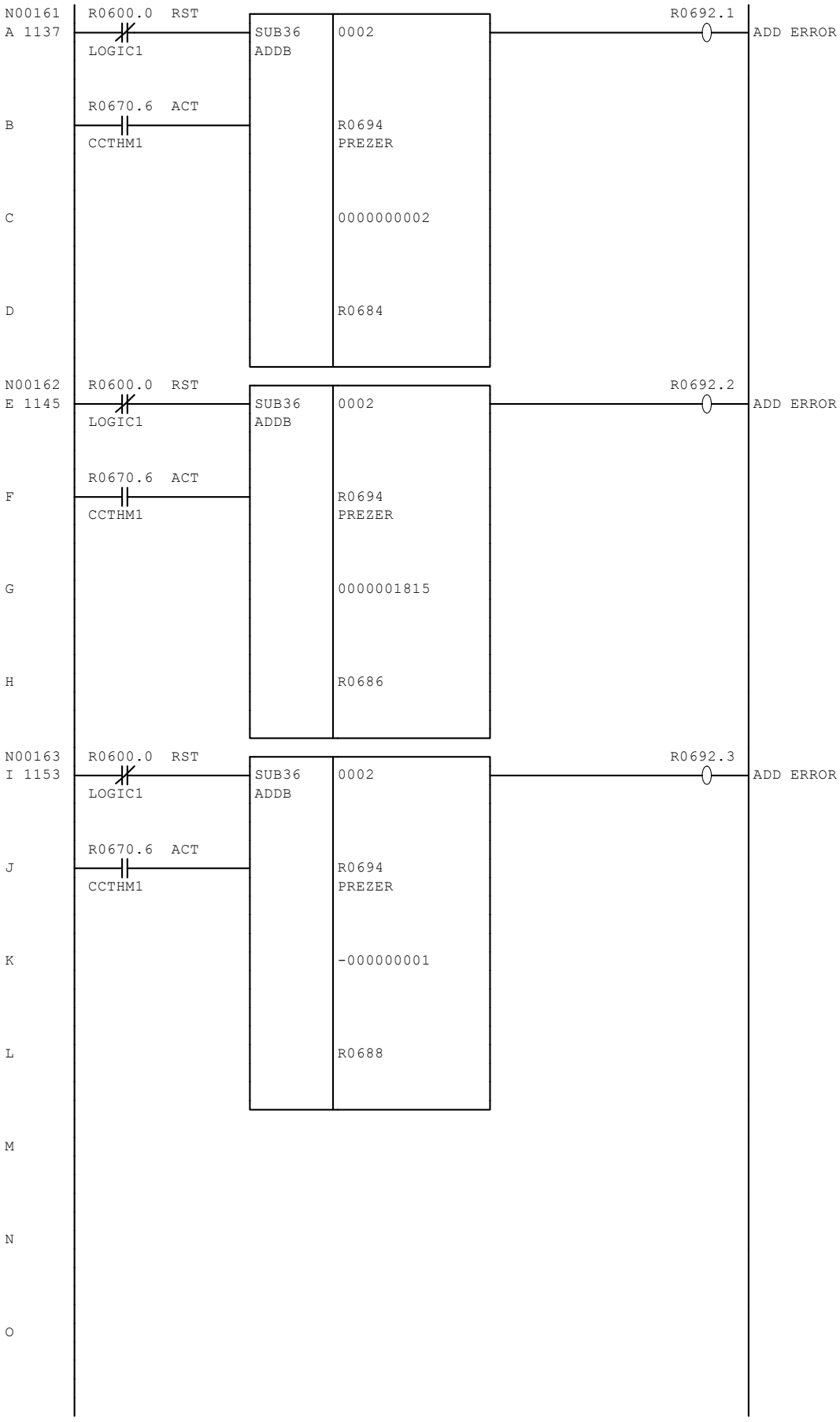
N00161
A 1137
R0600.0 RST
LOGIC1
SUB36
ADDB
0002
R0692.1
ADD ERROR
R0670.6 ACT
B
CCTHM1
R0694
PREZER
C
0000000002
D
R0684
N00162
E 1145
R0600.0 RST
LOGIC1
SUB36
ADDB
0002
R0692.2
ADD ERROR
R0670.6 ACT
F
CCTHM1
R0694
PREZER
G
0000001815
H
R0686
N00163
I 1153
R0600.0 RST
LOGIC1
SUB36
ADDB
0002
R0692.3
ADD ERROR
R0670.6 ACT
J
CCTHM1
R0694
PREZER
K
-000000001
L
R0688
M
N
O

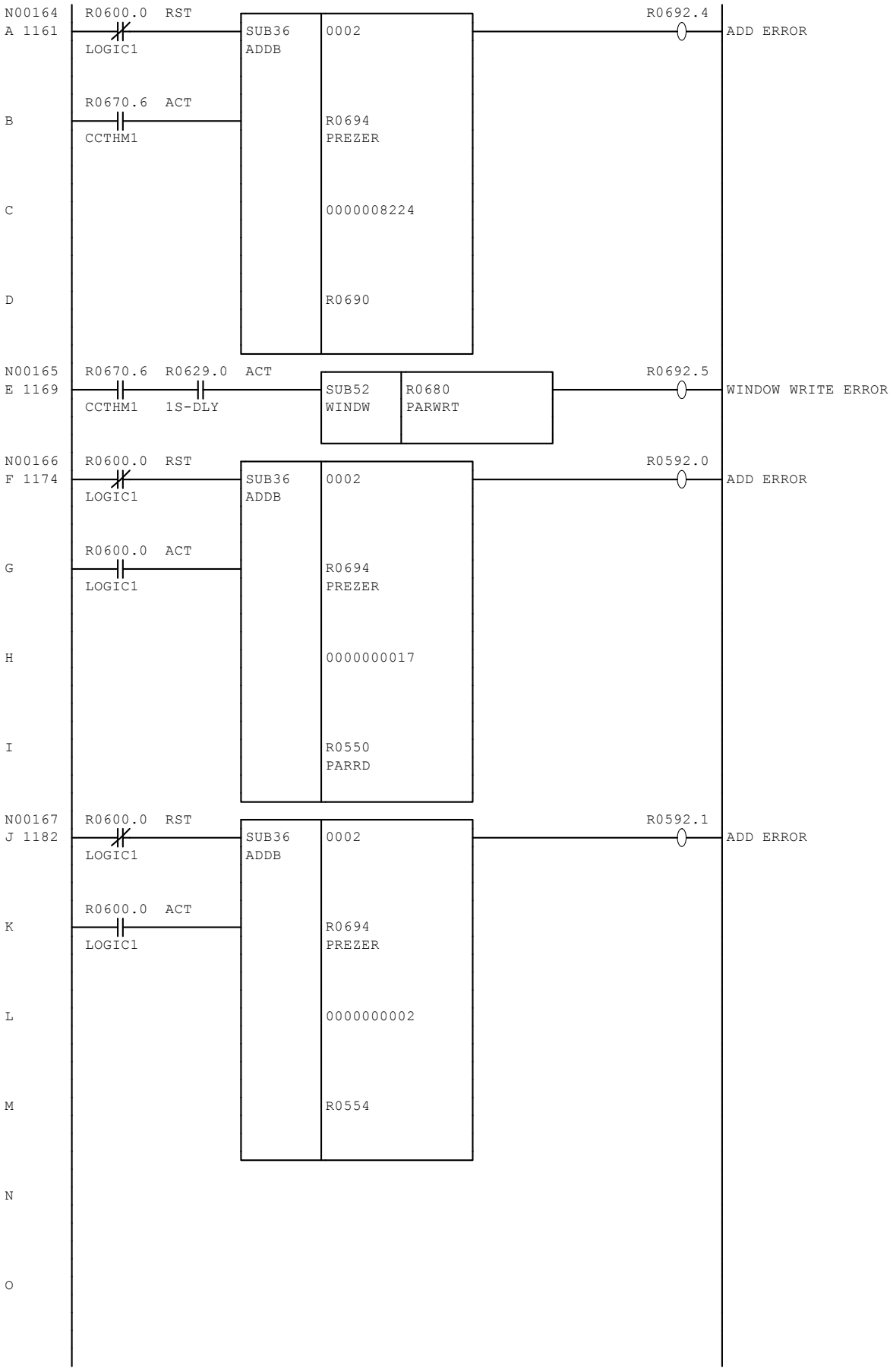
N00164
A 1161
R0600.0 RST
LOGIC1
SUB36
ADDB
0002
R0692.4
ADD ERROR
R0670.6 ACT
B
CCTHM1
R0694
PREZER
C
0000008224
D
R0690
N00165
E 1169
R0670.6 R0629.0 ACT
CCTHM1 1S-DLY
SUB52
WINDW
R0680
PARWRT
R0692.5
WINDOW WRITE ERROR
N00166
F 1174
R0600.0 RST
LOGIC1
SUB36
ADDB
0002
R0592.0
ADD ERROR
R0600.0 ACT
G
LOGIC1
R0694
PREZER
H
0000000017
I
R0550
PARRD
N00167
J 1182
R0600.0 RST
LOGIC1
SUB36
ADDB
0002
R0592.1
ADD ERROR
R0600.0 ACT
K
LOGIC1
R0694
PREZER
L
0000000002
M
R0554
N
O

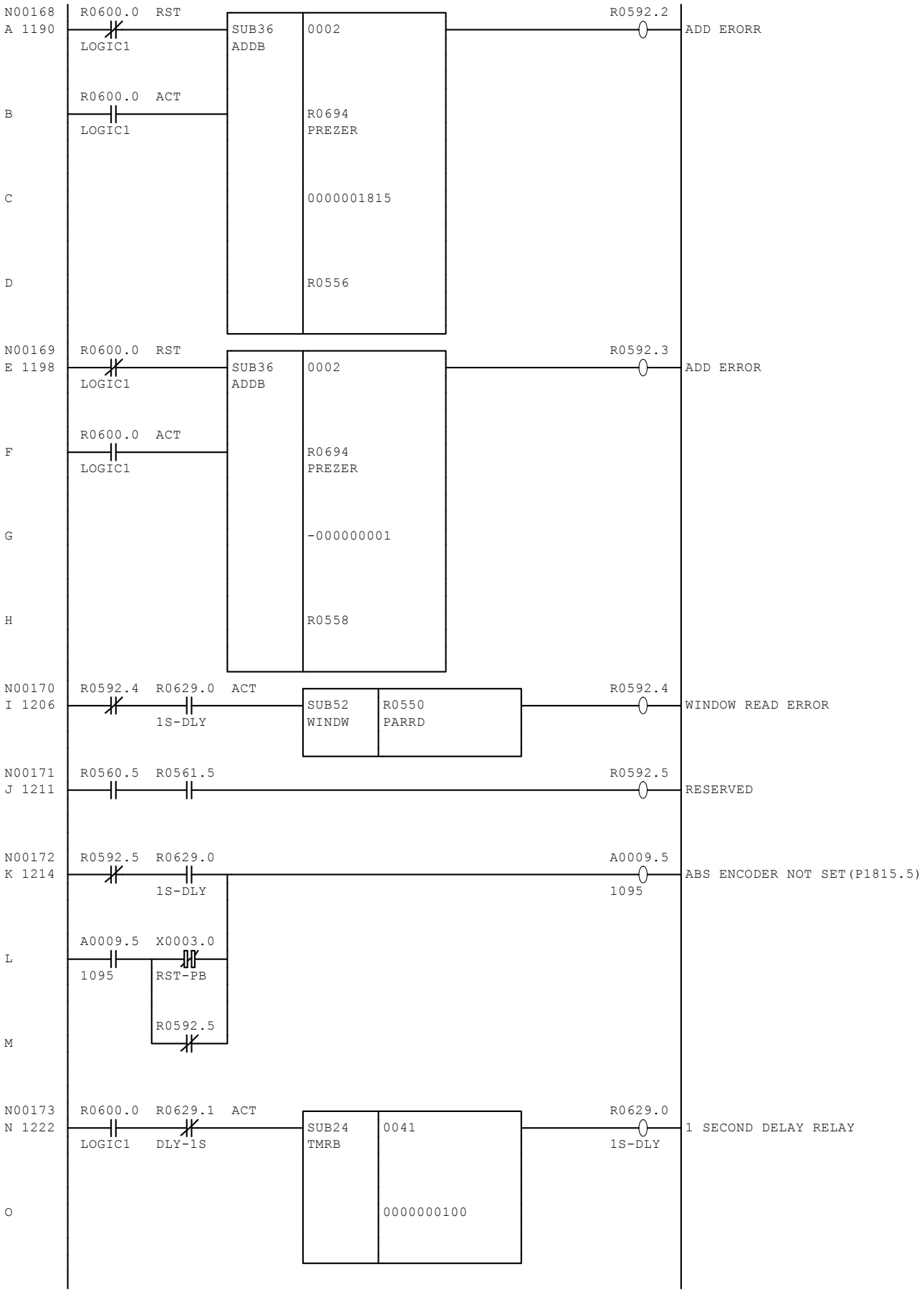
N00168
A 1190
R0600.0 RST
LOGIC1
SUB36
ADDB
0002
R0592.2
ADD ERORR
B
R0600.0 ACT
LOGIC1
R0694
PREZER
C
0000001815
D
R0556
N00169
E 1198
R0600.0 RST
LOGIC1
SUB36
ADDB
0002
R0592.3
ADD ERROR
F
R0600.0 ACT
LOGIC1
R0694
PREZER
G
-000000001
H
R0558
N00170
I 1206
R0592.4
R0629.0 ACT
1S-DLY
SUB52
WINDW
R0550
PARRD
R0592.4
WINDOW READ ERROR
N00171
J 1211
R0560.5
R0561.5
R0592.5
RESERVED
N00172
K 1214
R0592.5
R0629.0
1S-DLY
A0009.5
1095
ABS ENCODER NOT SET(P1815.5)
L
A0009.5
1095
X0003.0
RST-PB
M
R0592.5
N00173
N 1222
R0600.0
LOGIC1
R0629.1 ACT
DLY-1S
SUB24
TMRB
0041
R0629.0
1S-DLY
1 SECOND DELAY RELAY
O
0000000100

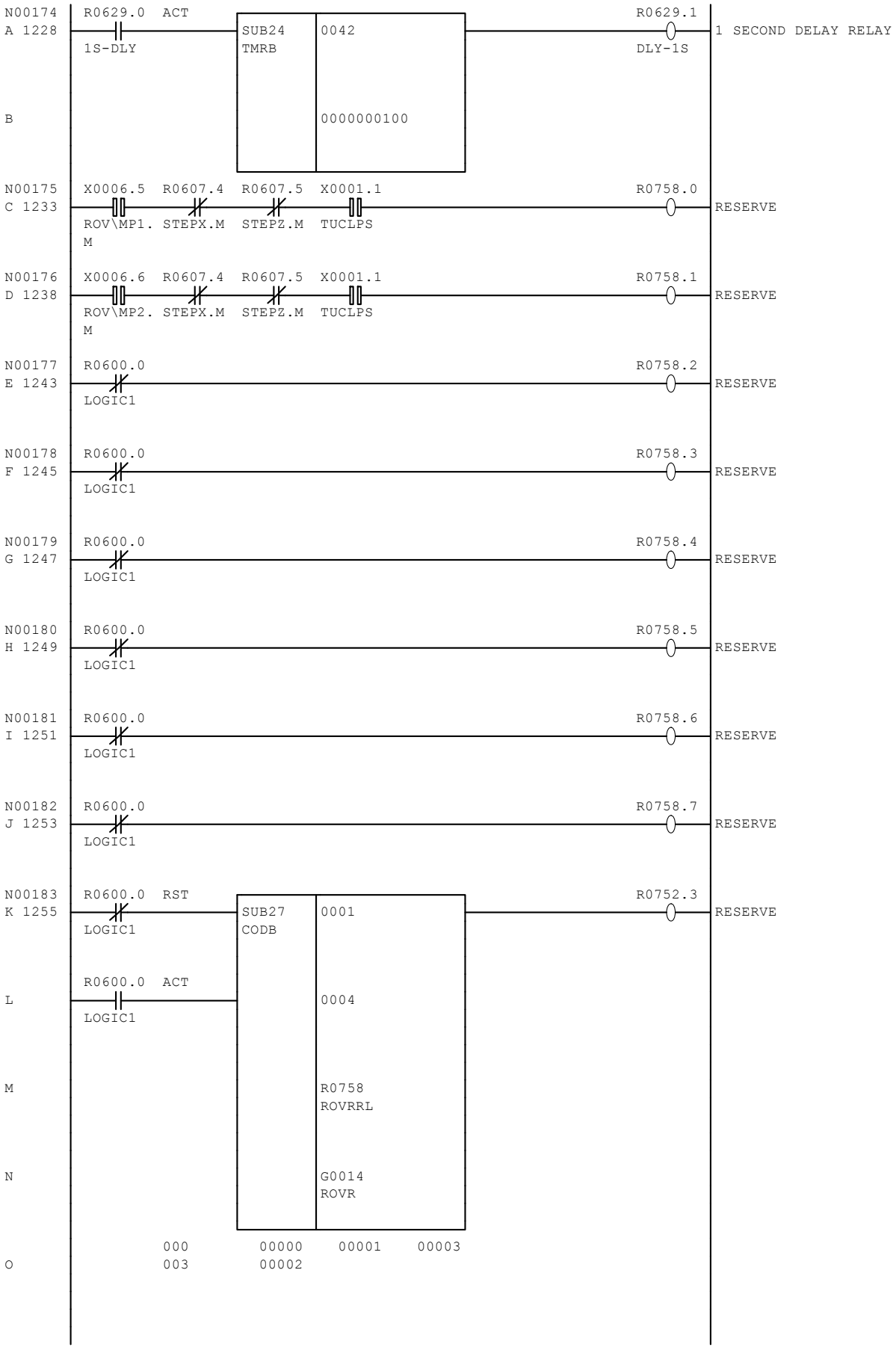
N00174
A 1228
R0629.0 ACT
1S-DLY
SUB24
TMRB
0042
B
0000000100
R0629.1
DLY-1S
1 SECOND DELAY RELAY
N00175
C 1233
X0006.5 R0607.4 R0607.5 X0001.1
ROV\MP1.M STEPX.M STEPZ.M TUCLPS
R0758.0
RESERVE
N00176
D 1238
X0006.6 R0607.4 R0607.5 X0001.1
ROV\MP2.M STEPX.M STEPZ.M TUCLPS
R0758.1
RESERVE
N00177
E 1243
R0600.0
LOGIC1
R0758.2
RESERVE
N00178
F 1245
R0600.0
LOGIC1
R0758.3
RESERVE
N00179
G 1247
R0600.0
LOGIC1
R0758.4
RESERVE
N00180
H 1249
R0600.0
LOGIC1
R0758.5
RESERVE
N00181
I 1251
R0600.0
LOGIC1
R0758.6
RESERVE
N00182
J 1253
R0600.0
LOGIC1
R0758.7
RESERVE
N00183
K 1255
R0600.0 RST
LOGIC1
SUB27
CODB
0001
R0752.3
RESERVE
L
R0600.0 ACT
LOGIC1
0004
M
R0758
ROVRRL
N
G0014
ROVR
O
000 00000 00001 00003
003 00002

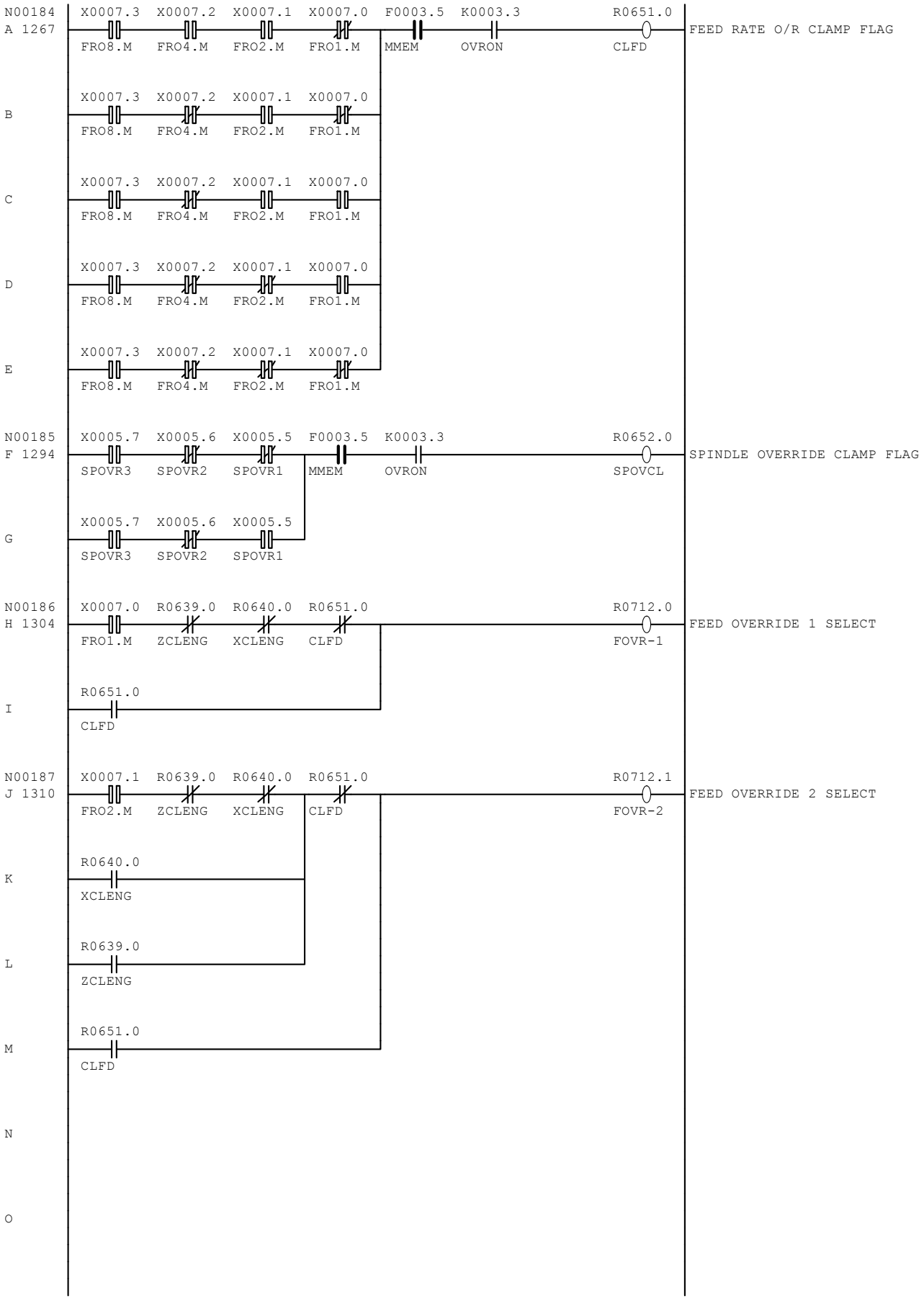
N00184
A 1267
X0007.3 FRO8.M
X0007.2 FRO4.M
X0007.1 FRO2.M
X0007.0 FRO1.M
F0003.5 MMEM
K0003.3 OVRON
R0651.0 CLFD
FEED RATE O/R CLAMP FLAG
B
C
D
E
N00185
F 1294
X0005.7 SPOVR3
X0005.6 SPOVR2
X0005.5 SPOVR1
F0003.5 MMEM
K0003.3 OVRON
R0652.0 SPOVCL
SPINDLE OVERRIDE CLAMP FLAG
G
N00186
H 1304
R0639.0 ZCLENG
R0640.0 XCLENG
R0712.0 FOVR-1
FEED OVERRIDE 1 SELECT
I
N00187
J 1310
R0712.1 FOVR-2
FEED OVERRIDE 2 SELECT
K
L
M
N
O

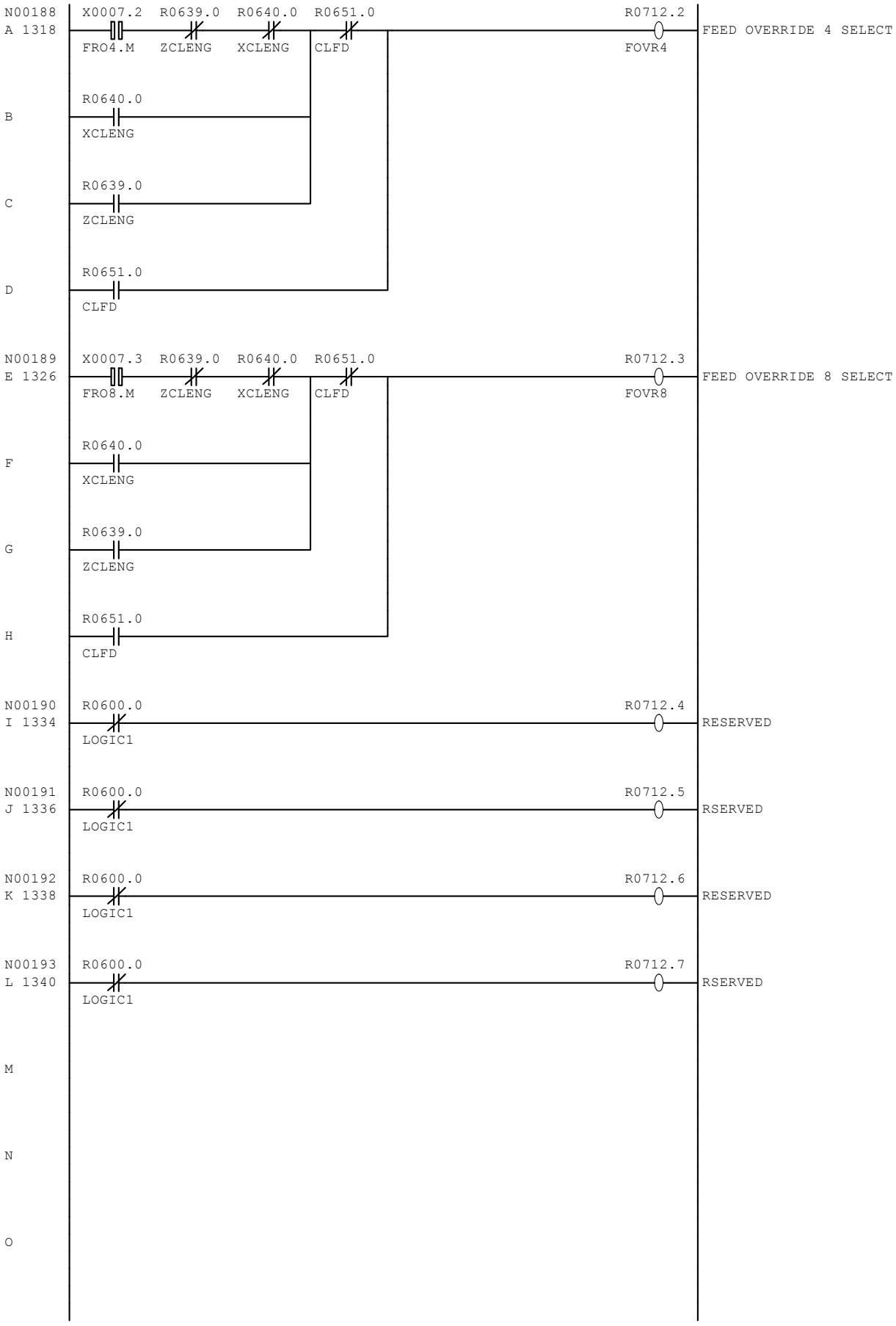
N00188
A 1318
X0007.2
FRO4.M
R0639.0
ZCLENG
R0640.0
XCLENG
R0651.0
CLFD
R0712.2
FOVR4
FEED OVERRIDE 4 SELECT
B
R0640.0
XCLENG
C
R0639.0
ZCLENG
D
R0651.0
CLFD
N00189
E 1326
X0007.3
FRO8.M
R0639.0
ZCLENG
R0640.0
XCLENG
R0651.0
CLFD
R0712.3
FOVR8
FEED OVERRIDE 8 SELECT
F
R0640.0
XCLENG
G
R0639.0
ZCLENG
H
R0651.0
CLFD
N00190
I 1334
R0600.0
LOGIC1
R0712.4
RESERVED
N00191
J 1336
R0600.0
LOGIC1
R0712.5
RSERVED
N00192
K 1338
R0600.0
LOGIC1
R0712.6
RESERVED
N00193
L 1340
R0600.0
LOGIC1
R0712.7
RSERVED
M
N
O

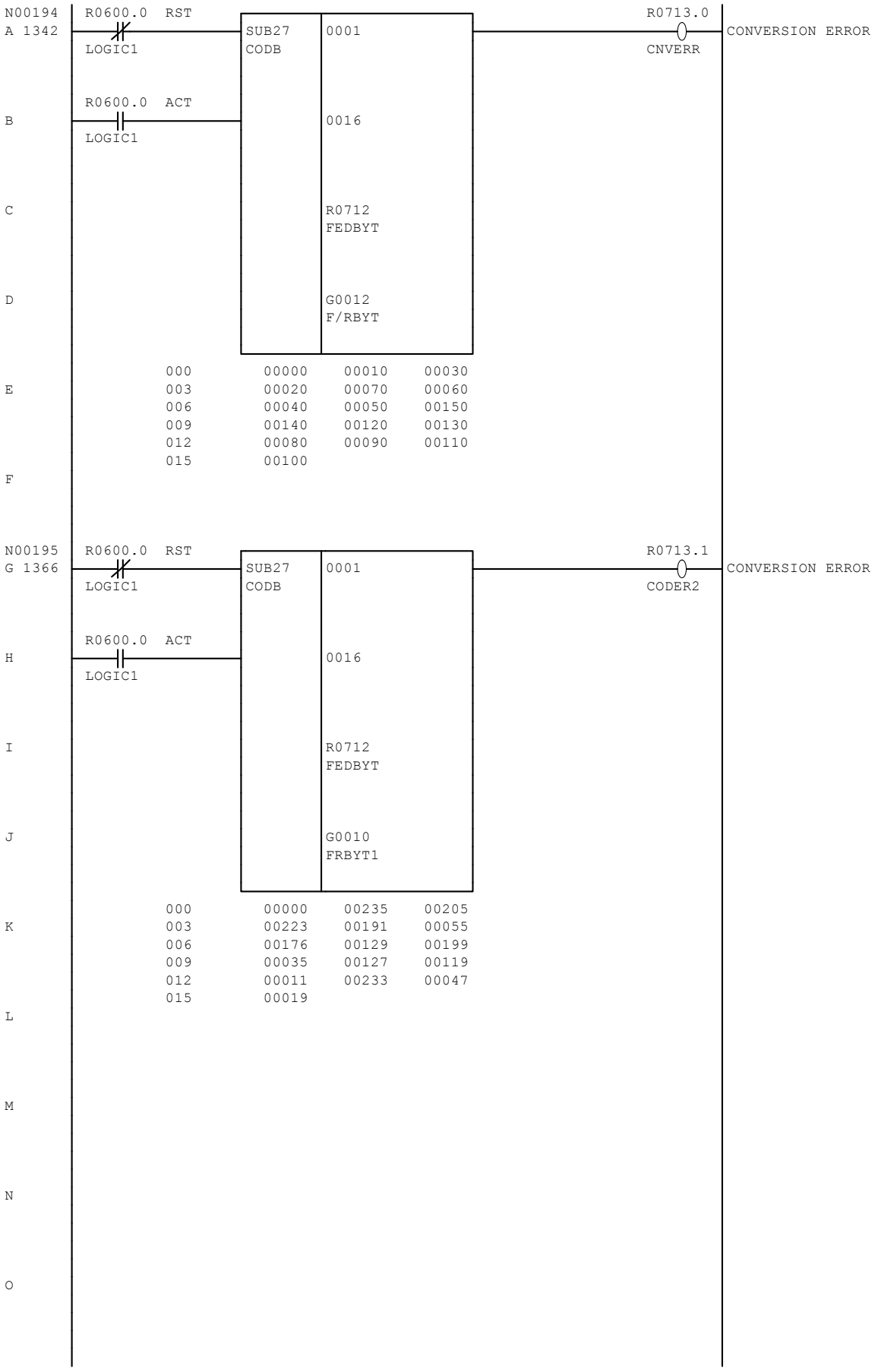
N00194
A 1342
R0600.0 RST
LOGIC1
SUB27
CODB
0001
R0713.0
CNVERR
CONVERSION ERROR
R0600.0 ACT
B
LOGIC1
0016
C
R0712
FEDBYT
D
G0012
F/RBYT
000 00000 00010 00030
E 003 00020 00070 00060
006 00040 00050 00150
009 00140 00120 00130
012 00080 00090 00110
015 00100
F
N00195
G 1366
R0600.0 RST
LOGIC1
SUB27
CODB
0001
R0713.1
CODER2
CONVERSION ERROR
R0600.0 ACT
H
LOGIC1
0016
I
R0712
FEDBYT
J
G0010
FRBYT1
000 00000 00235 00205
K 003 00223 00191 00055
006 00176 00129 00199
009 00035 00127 00119
012 00011 00233 00047
015 00019
L
M
N
O

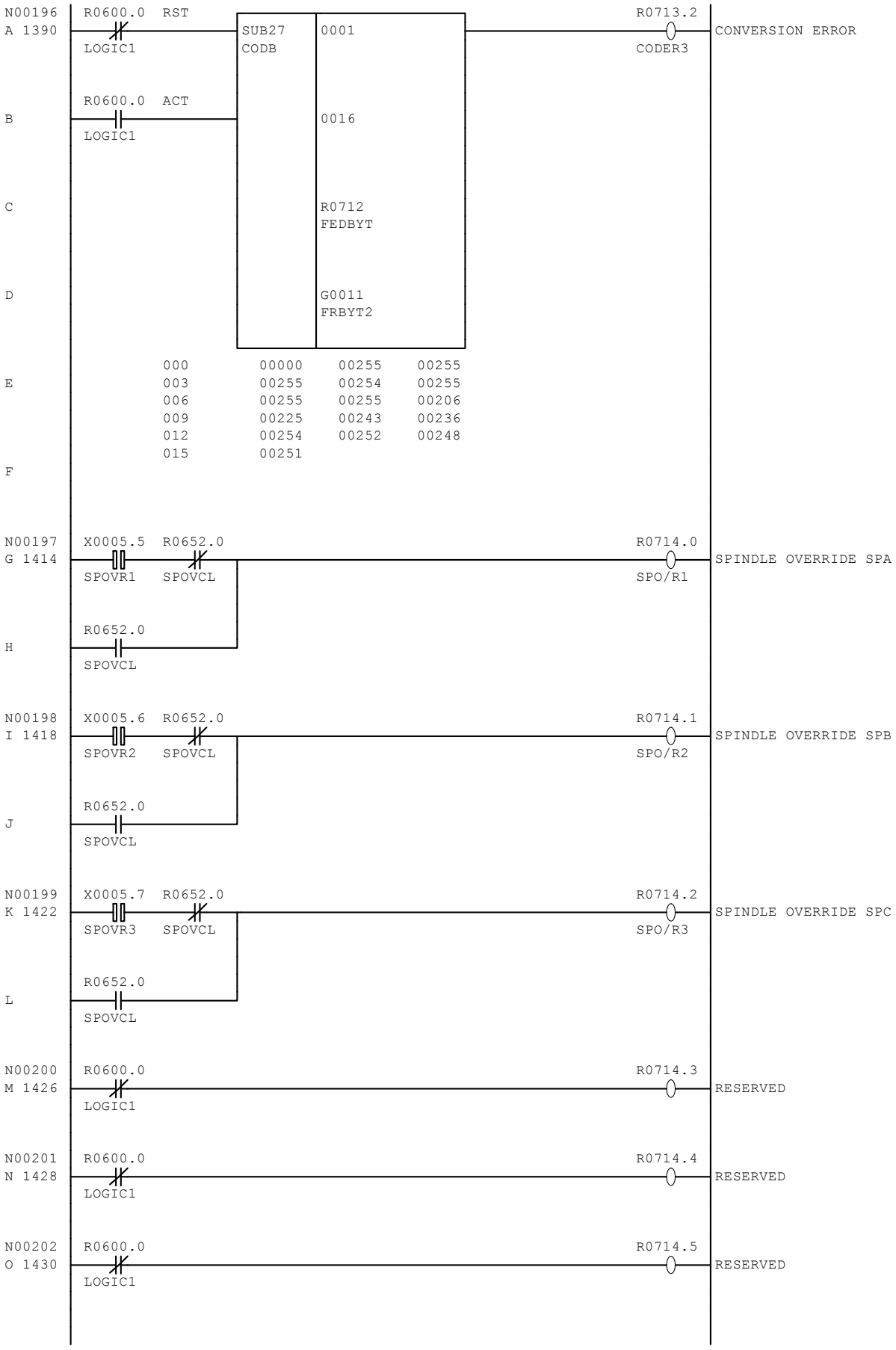
N00196
A 1390
R0600.0 RST
LOGIC1
SUB27
CODB
0001
R0713.2
CODER3
CONVERSION ERROR
R0600.0 ACT
B
LOGIC1
0016
C
R0712
FEDBYT
D
G0011
FRBYT2
000 00000 00255 00255
E 003 00255 00254 00255
006 00255 00255 00206
009 00225 00243 00236
012 00254 00252 00248
015 00251
F
N00197
G 1414
X0005.5 R0652.0
SPOVR1 SPOVCL
R0714.0
SPO/R1
SPINDLE OVERRIDE SPA
R0652.0
H
SPOVCL
N00198
I 1418
X0005.6 R0652.0
SPOVR2 SPOVCL
R0714.1
SPO/R2
SPINDLE OVERRIDE SPB
R0652.0
J
SPOVCL
N00199
K 1422
X0005.7 R0652.0
SPOVR3 SPOVCL
R0714.2
SPO/R3
SPINDLE OVERRIDE SPC
R0652.0
L
SPOVCL
N00200
M 1426
R0600.0
LOGIC1
R0714.3
RESERVED
N00201
N 1428
R0600.0
LOGIC1
R0714.4
RESERVED
N00202
O 1430
R0600.0
LOGIC1
R0714.5
RESERVED

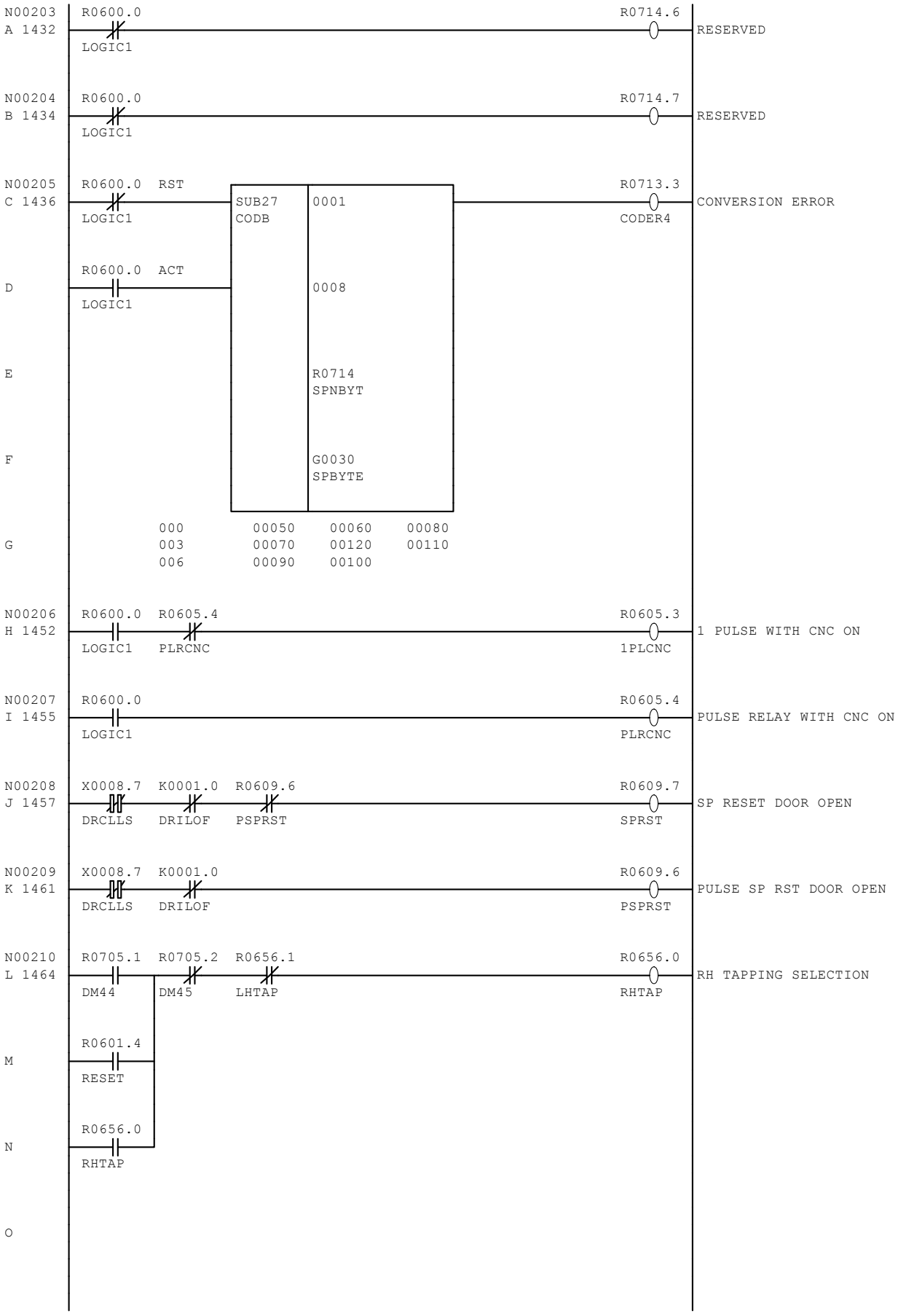
N00203
A 1432
R0600.0
LOGIC1
R0714.6
RESERVED
N00204
B 1434
R0600.0
LOGIC1
R0714.7
RESERVED
N00205
C 1436
R0600.0
LOGIC1
RST
SUB27
CODB
0001
R0713.3
CODER4
CONVERSION ERROR
D
R0600.0
LOGIC1
ACT
0008
E
R0714
SPNBYT
F
G0030
SPBYTE
G
000 00050 00060 00080
003 00070 00120 00110
006 00090 00100
N00206
H 1452
R0600.0
LOGIC1
R0605.4
PLRCNC
R0605.3
1PLCNC
1 PULSE WITH CNC ON
N00207
I 1455
R0600.0
LOGIC1
R0605.4
PLRCNC
PULSE RELAY WITH CNC ON
N00208
J 1457
X0008.7
DRCLLS
K0001.0
DRILOF
R0609.6
PSPRST
R0609.7
SPRST
SP RESET DOOR OPEN
N00209
K 1461
X0008.7
DRCLLS
K0001.0
DRILOF
R0609.6
PSPRST
PULSE SP RST DOOR OPEN
N00210
L 1464
R0705.1
DM44
R0705.2
DM45
R0656.1
LHTAP
R0656.0
RHTAP
RH TAPPING SELECTION
M
R0601.4
RESET
N
R0656.0
RHTAP
O

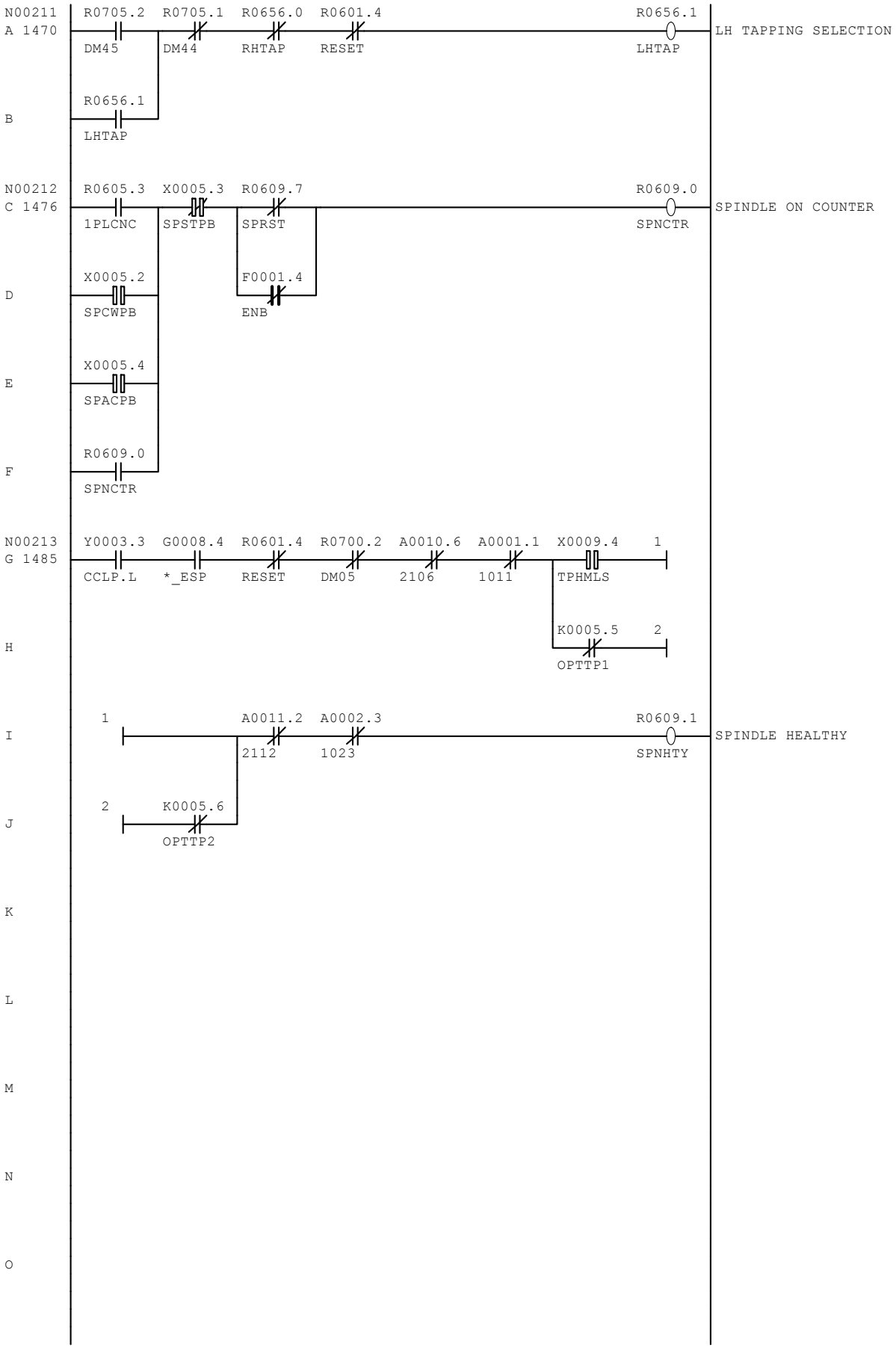
N00211
A 1470
R0705.2
DM45
R0705.1
DM44
R0656.0
RHTAP
R0601.4
RESET
R0656.1
LHTAP
LH TAPPING SELECTION
B
R0656.1
LHTAP
N00212
C 1476
R0605.3
1PLCNC
X0005.3
SPSTPB
R0609.7
SPRST
R0609.0
SPNCTR
SPINDLE ON COUNTER
D
X0005.2
SPCWPB
F0001.4
ENB
E
X0005.4
SPACPB
F
R0609.0
SPNCTR
N00213
G 1485
Y0003.3
CCLP.L
G0008.4
*_ESP
R0601.4
RESET
R0700.2
DM05
A0010.6
2106
A0001.1
1011
X0009.4
TPHMLS
1
H
K0005.5
OPTTP1
2
I
1
A0011.2
2112
A0002.3
1023
R0609.1
SPNHTY
SPINDLE HEALTHY
J
2
K0005.6
OPTTP2
K
L
M
N
O

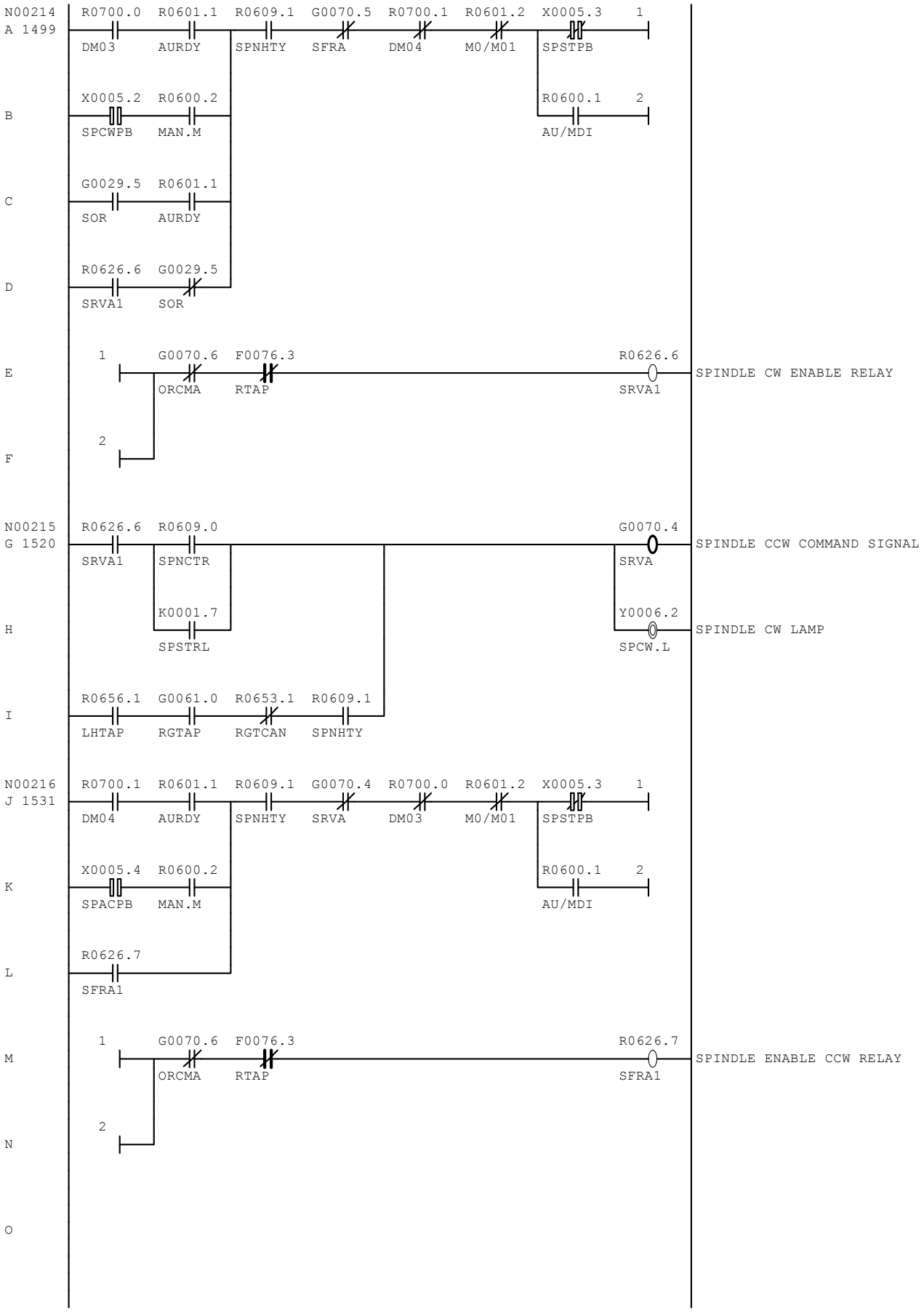
N00214
A 1499
R0700.0 DM03
R0601.1 AURDY
R0609.1 SPNHTY
G0070.5 SFRA
R0700.1 DM04
R0601.2 M0/M01
X0005.3 SPSTPB
1
B
X0005.2 SPCWPB
R0600.2 MAN.M
R0600.1 AU/MDI
2
C
G0029.5 SOR
R0601.1 AURDY
D
R0626.6 SRVA1
G0029.5 SOR
E
1
G0070.6 ORCMA
F0076.3 RTAP
R0626.6 SRVA1
SPINDLE CW ENABLE RELAY
F
2
N00215
G 1520
R0626.6 SRVA1
R0609.0 SPNCTR
G0070.4 SRVA
SPINDLE CCW COMMAND SIGNAL
H
K0001.7 SPSTRL
Y0006.2 SPCW.L
SPINDLE CW LAMP
I
R0656.1 LHTAP
G0061.0 RGTAP
R0653.1 RGTCAN
R0609.1 SPNHTY
N00216
J 1531
R0700.1 DM04
R0601.1 AURDY
R0609.1 SPNHTY
G0070.4 SRVA
R0700.0 DM03
R0601.2 M0/M01
X0005.3 SPSTPB
1
K
X0005.4 SPACPB
R0600.2 MAN.M
R0600.1 AU/MDI
2
L
R0626.7 SFRA1
M
1
G0070.6 ORCMA
F0076.3 RTAP
R0626.7 SFRA1
SPINDLE ENABLE CCW RELAY
N
2
O

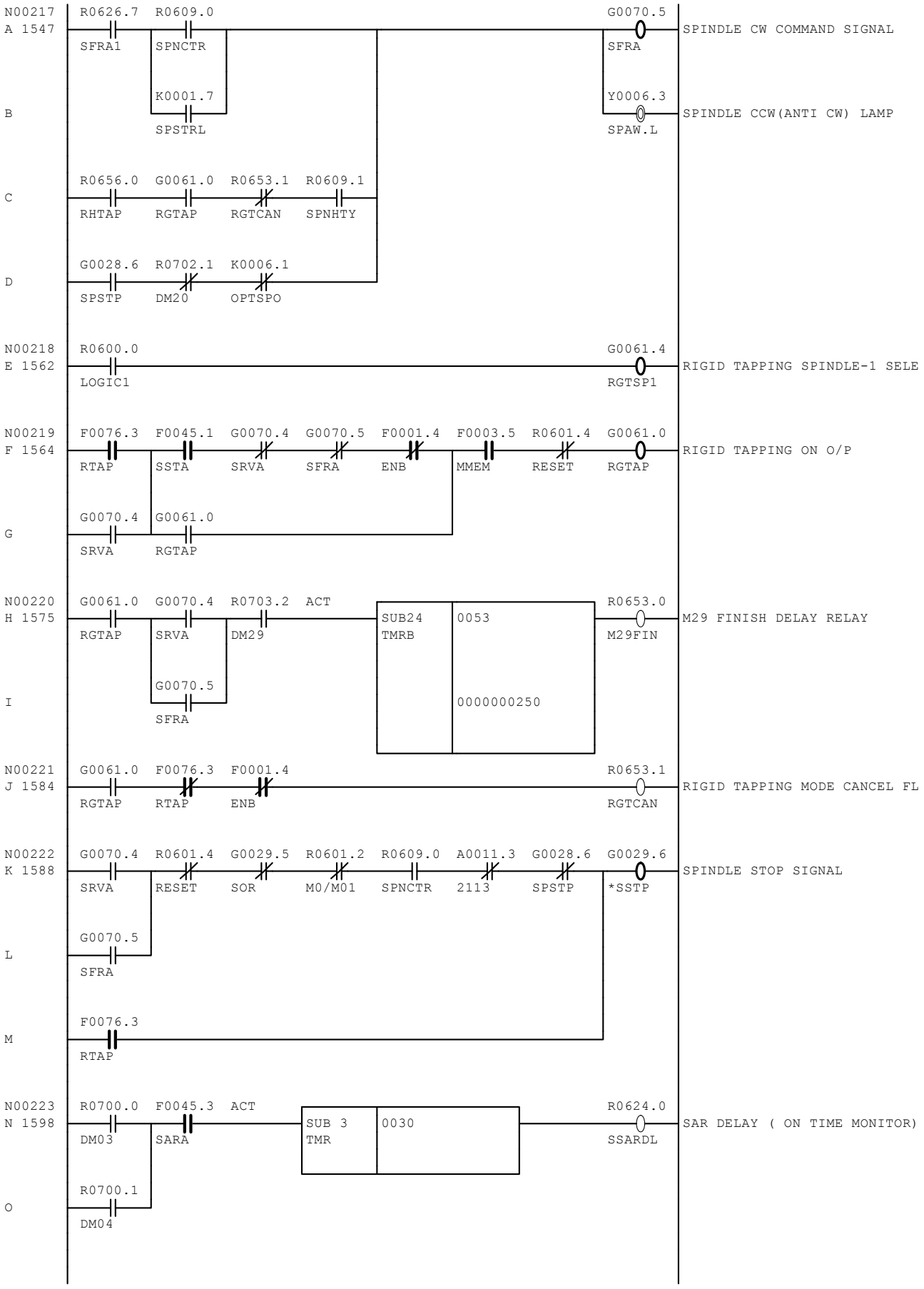
N00217
A 1547
R0626.7
SFRA1
R0609.0
SPNCTR
K0001.7
SPSTRL
B
G0070.5
SFRA
Y0006.3
SPAW.L
SPINDLE CW COMMAND SIGNAL
SPINDLE CCW(ANTI CW) LAMP
C
R0656.0
RHTAP
G0061.0
RGTAP
R0653.1
RGTCAN
R0609.1
SPNHTY
D
G0028.6
SPSTP
R0702.1
DM20
K0006.1
OPTSPO
N00218
E 1562
R0600.0
LOGIC1
G0061.4
RGTSP1
RIGID TAPPING SPINDLE-1 SELE
N00219
F 1564
F0076.3
RTAP
F0045.1
SSTA
G0070.4
SRVA
G0070.5
SFRA
F0001.4
ENB
F0003.5
MMEM
R0601.4
RESET
G0061.0
RGTAP
RIGID TAPPING ON O/P
G
G0070.4
SRVA
G0061.0
RGTAP
N00220
H 1575
G0061.0
RGTAP
G0070.4
SRVA
R0703.2
DM29
ACT
SUB24
TMRB
0053
0000000250
R0653.0
M29FIN
M29 FINISH DELAY RELAY
I
G0070.5
SFRA
N00221
J 1584
G0061.0
RGTAP
F0076.3
RTAP
F0001.4
ENB
R0653.1
RGTCAN
RIGID TAPPING MODE CANCEL FL
N00222
K 1588
G0070.4
SRVA
R0601.4
RESET
G0029.5
SOR
R0601.2
M0/M01
R0609.0
SPNCTR
A0011.3
2113
G0028.6
SPSTP
G0029.6
*SSTP
SPINDLE STOP SIGNAL
L
G0070.5
SFRA
M
F0076.3
RTAP
N00223
N 1598
R0700.0
DM03
F0045.3
SARA
ACT
SUB 3
TMR
0030
R0624.0
SSARDL
SAR DELAY (ON TIME MONITOR)
O
R0700.1
DM04

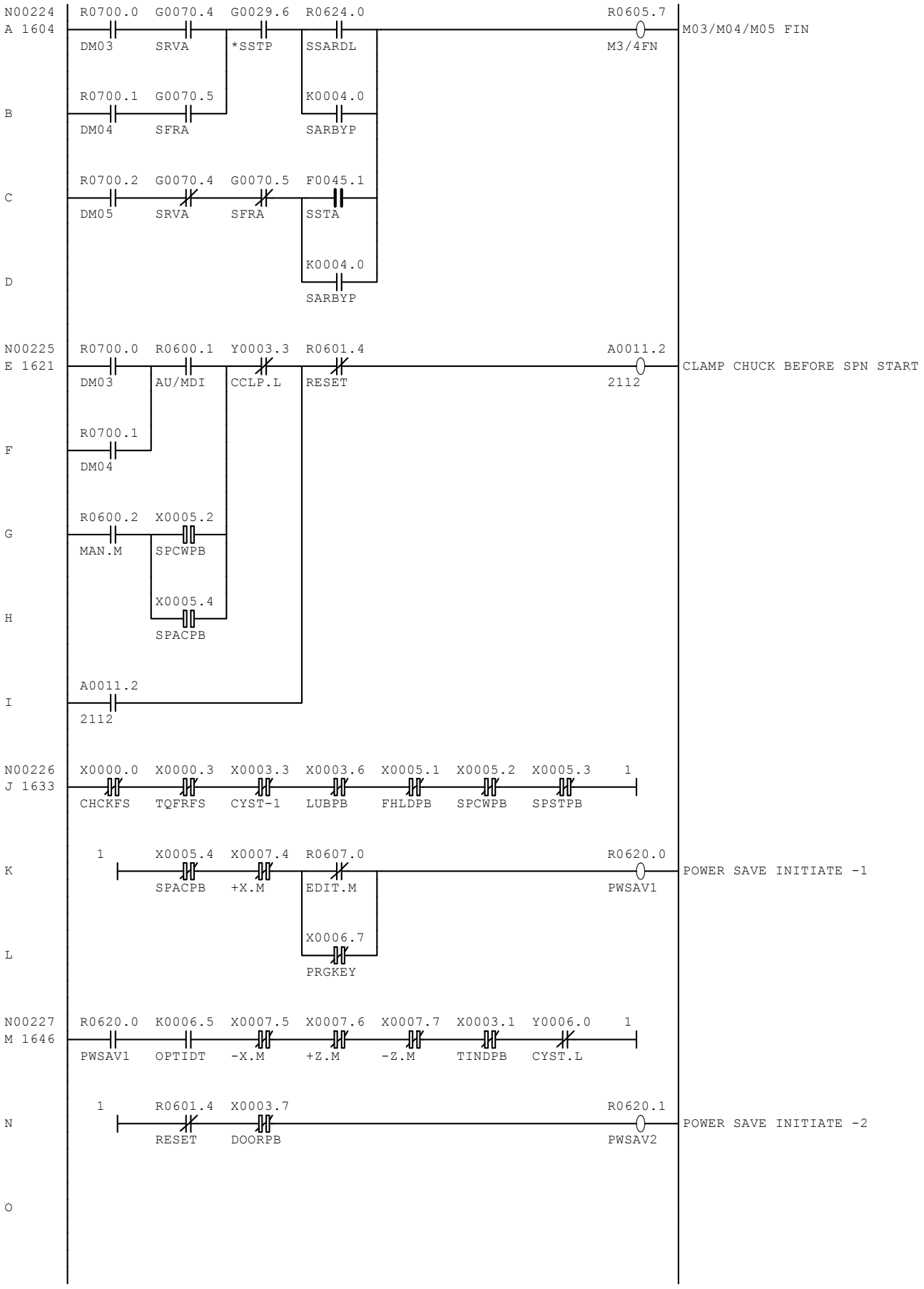
N00224
A 1604
R0700.0 DM03
G0070.4 SRVA
G0029.6 *SSTP
R0624.0 SSARDL
R0605.7 M3/4FN
M03/M04/M05 FIN
B
R0700.1 DM04
G0070.5 SFRA
K0004.0 SARBYP
C
R0700.2 DM05
G0070.4 SRVA
G0070.5 SFRA
F0045.1 SSTA
D
K0004.0 SARBYP
N00225
E 1621
R0700.0 DM03
R0600.1 AU/MDI
Y0003.3 CCLP.L
R0601.4 RESET
A0011.2 2112
CLAMP CHUCK BEFORE SPN START
F
R0700.1 DM04
G
R0600.2 MAN.M
X0005.2 SPCWPB
H
X0005.4 SPACPB
I
A0011.2 2112
N00226
J 1633
X0000.0 CHCKFS
X0000.3 TQFRFS
X0003.3 CYST-1
X0003.6 LUBPB
X0005.1 FHLDPB
X0005.2 SPCWPB
X0005.3 SPSTPB
1
K
1
X0005.4 SPACPB
X0007.4 +X.M
R0607.0 EDIT.M
R0620.0 PWSAV1
POWER SAVE INITIATE -1
L
X0006.7 PRGKEY
N00227
M 1646
R0620.0 PWSAV1
K0006.5 OPTIDT
X0007.5 -X.M
X0007.6 +Z.M
X0007.7 -Z.M
X0003.1 TINDPB
Y0006.0 CYST.L
1
N
1
R0601.4 RESET
X0003.7 DOORPB
R0620.1 PWSAV2
POWER SAVE INITIATE -2
O

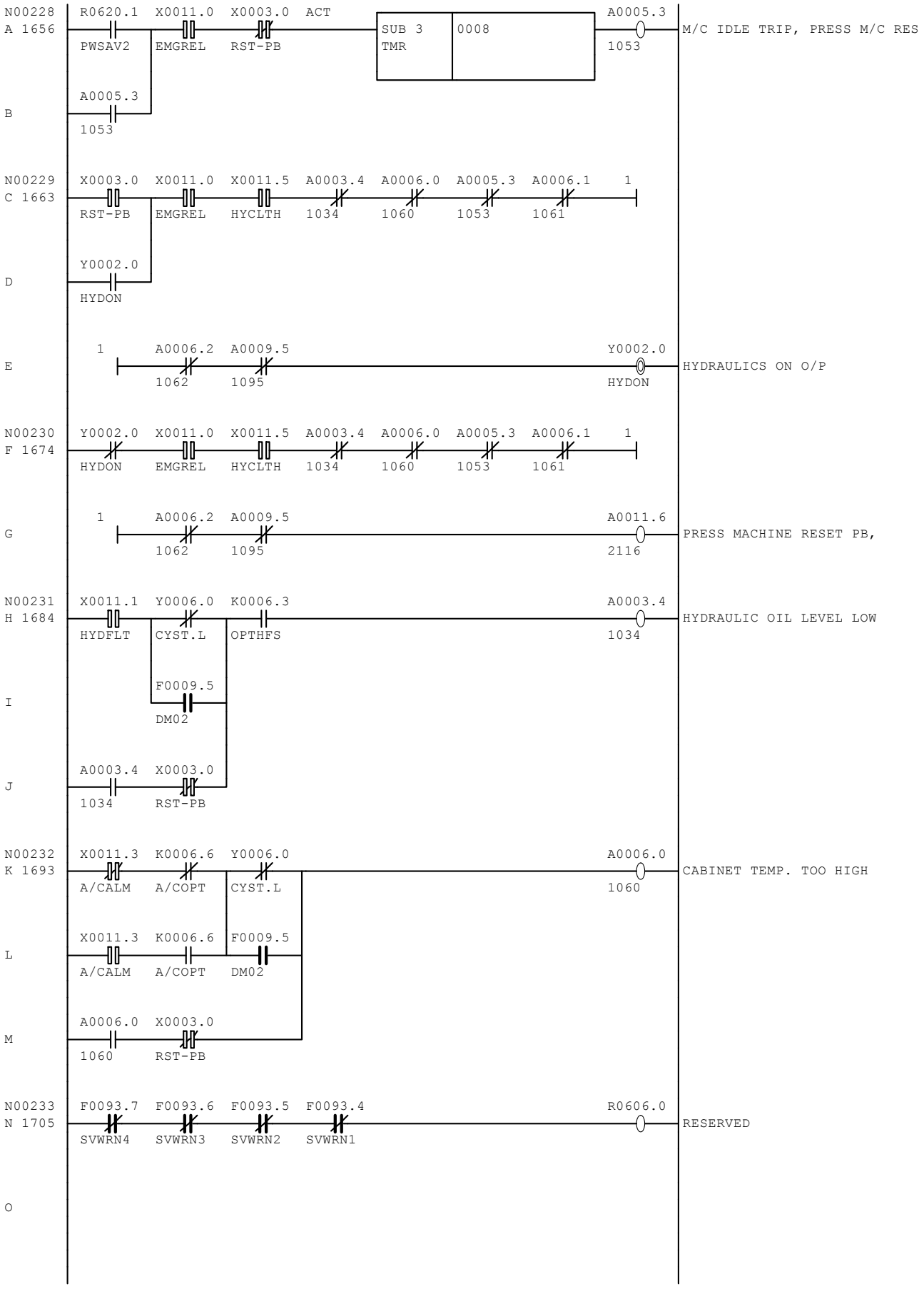
N00228
A 1656
R0620.1
PWSAV2
X0011.0
EMGREL
X0003.0
RST-PB
ACT
SUB 3
TMR
0008
A0005.3
1053
M/C IDLE TRIP, PRESS M/C RES
B
A0005.3
1053
N00229
C 1663
X0003.0
RST-PB
X0011.0
EMGREL
X0011.5
HYCLTH
A0003.4
1034
A0006.0
1060
A0005.3
1053
A0006.1
1061
1
D
Y0002.0
HYDON
E
1
A0006.2
1062
A0009.5
1095
Y0002.0
HYDON
HYDRAULICS ON O/P
N00230
F 1674
Y0002.0
HYDON
X0011.0
EMGREL
X0011.5
HYCLTH
A0003.4
1034
A0006.0
1060
A0005.3
1053
A0006.1
1061
1
G
1
A0006.2
1062
A0009.5
1095
A0011.6
2116
PRESS MACHINE RESET PB,
N00231
H 1684
X0011.1
HYDFLT
Y0006.0
CYST.L
K0006.3
OPTHFS
A0003.4
1034
HYDRAULIC OIL LEVEL LOW
I
F0009.5
DM02
J
A0003.4
1034
X0003.0
RST-PB
N00232
K 1693
X0011.3
A/CALM
K0006.6
A/COPT
Y0006.0
CYST.L
A0006.0
1060
CABINET TEMP. TOO HIGH
L
X0011.3
A/CALM
K0006.6
A/COPT
F0009.5
DM02
M
A0006.0
1060
X0003.0
RST-PB
N00233
N 1705
F0093.7
SVWRN4
F0093.6
SVWRN3
F0093.5
SVWRN2
F0093.4
SVWRN1
R0606.0
RESERVED
O

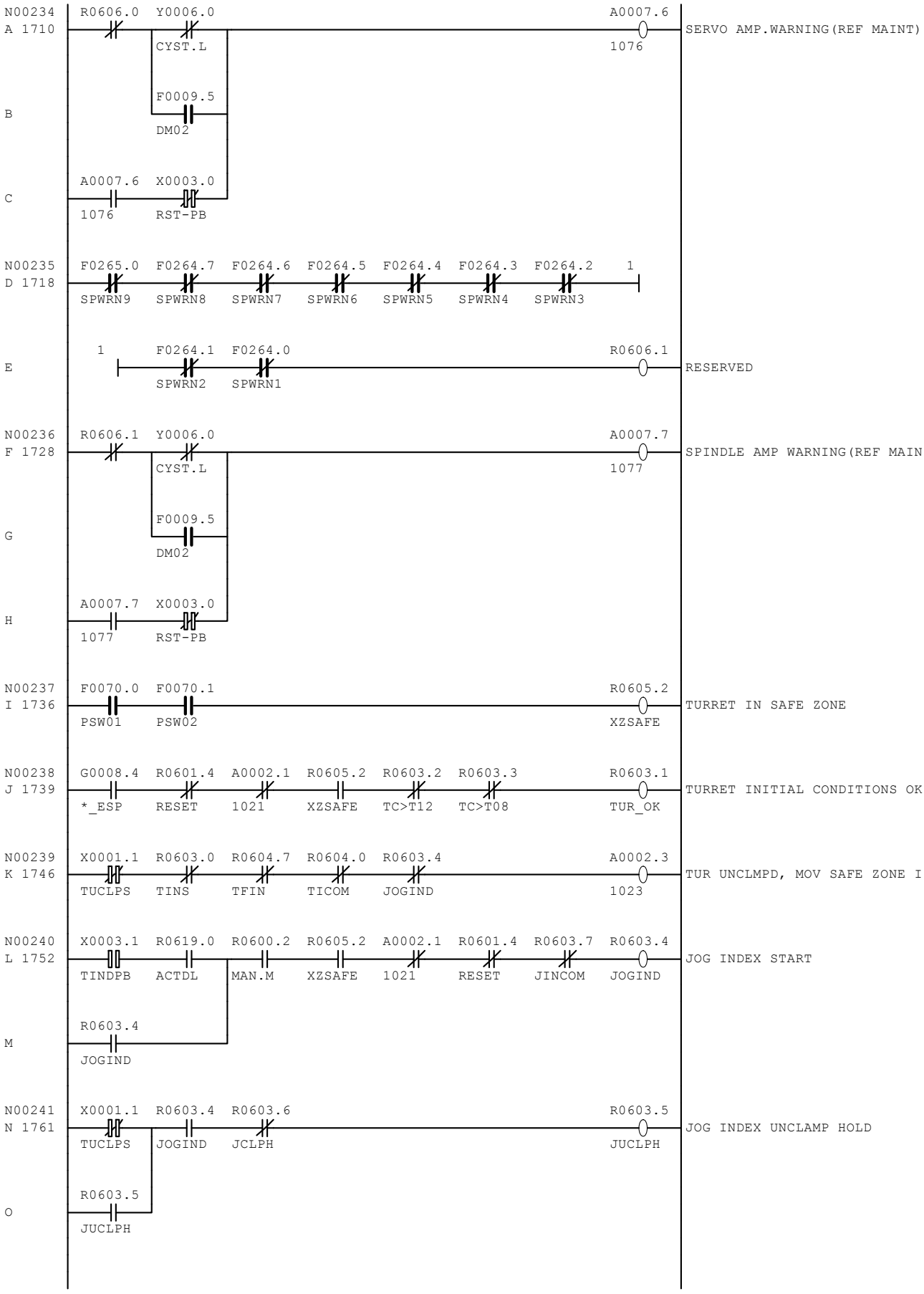
N00234
A 1710
R0606.0
Y0006.0
CYST.L
F0009.5
DM02
B
A0007.6
1076
X0003.0
RST-PB
C
A0007.6
1076
SERVO AMP.WARNING(REF MAINT)
N00235
D 1718
F0265.0
SPWRN9
F0264.7
SPWRN8
F0264.6
SPWRN7
F0264.5
SPWRN6
F0264.4
SPWRN5
F0264.3
SPWRN4
F0264.2
SPWRN3
1
E
1
F0264.1
SPWRN2
F0264.0
SPWRN1
R0606.1
RESERVED
N00236
F 1728
R0606.1
Y0006.0
CYST.L
F0009.5
DM02
G
A0007.7
1077
X0003.0
RST-PB
H
A0007.7
1077
SPINDLE AMP WARNING(REF MAIN
N00237
I 1736
F0070.0
PSW01
F0070.1
PSW02
R0605.2
XZSAFE
TURRET IN SAFE ZONE
N00238
J 1739
G0008.4
*_ESP
R0601.4
RESET
A0002.1
1021
R0605.2
XZSAFE
R0603.2
TC>T12
R0603.3
TC>T08
R0603.1
TUR_OK
TURRET INITIAL CONDITIONS OK
N00239
K 1746
X0001.1
TUCLPS
R0603.0
TINS
R0604.7
TFIN
R0604.0
TICOM
R0603.4
JOGIND
A0002.3
1023
TUR UNCLMPD, MOV SAFE ZONE I
N00240
L 1752
X0003.1
TINDPB
R0619.0
ACTDL
R0600.2
MAN.M
R0605.2
XZSAFE
A0002.1
1021
R0601.4
RESET
R0603.7
JINCOM
R0603.4
JOGIND
JOG INDEX START
R0603.4
JOGIND
M
N00241
N 1761
X0001.1
TUCLPS
R0603.4
JOGIND
R0603.6
JCLPH
R0603.5
JUCLPH
JOG INDEX UNCLAMP HOLD
R0603.5
JUCLPH
O

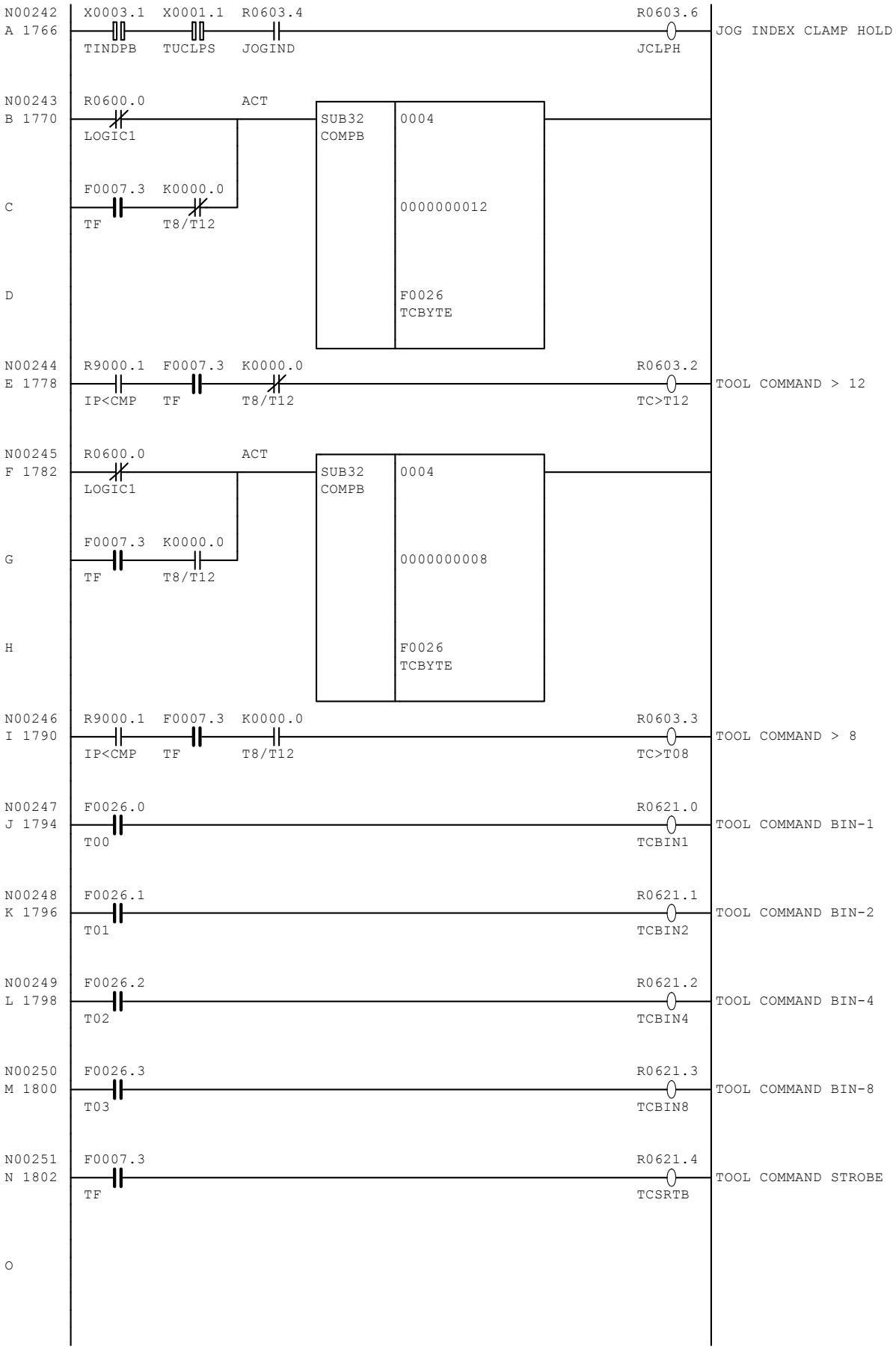
N00242
A 1766
X0003.1
TINDPB
X0001.1
TUCLPS
R0603.4
JOGIND
R0603.6
JCLPH
JOG INDEX CLAMP HOLD
N00243
B 1770
R0600.0
LOGIC1
ACT
SUB32
COMPB
0004
C
F0007.3
TF
K0000.0
T8/T12
0000000012
D
F0026
TCBYTE
N00244
E 1778
R9000.1
IP<CMP
F0007.3
TF
K0000.0
T8/T12
R0603.2
TC>T12
TOOL COMMAND > 12
N00245
F 1782
R0600.0
LOGIC1
ACT
SUB32
COMPB
0004
G
F0007.3
TF
K0000.0
T8/T12
0000000008
H
F0026
TCBYTE
N00246
I 1790
R9000.1
IP<CMP
F0007.3
TF
K0000.0
T8/T12
R0603.3
TC>T08
TOOL COMMAND > 8
N00247
J 1794
F0026.0
T00
R0621.0
TCBIN1
TOOL COMMAND BIN-1
N00248
K 1796
F0026.1
T01
R0621.1
TCBIN2
TOOL COMMAND BIN-2
N00249
L 1798
F0026.2
T02
R0621.2
TCBIN4
TOOL COMMAND BIN-4
N00250
M 1800
F0026.3
T03
R0621.3
TCBIN8
TOOL COMMAND BIN-8
N00251
N 1802
F0007.3
TF
R0621.4
TCSRTB
TOOL COMMAND STROBE
O

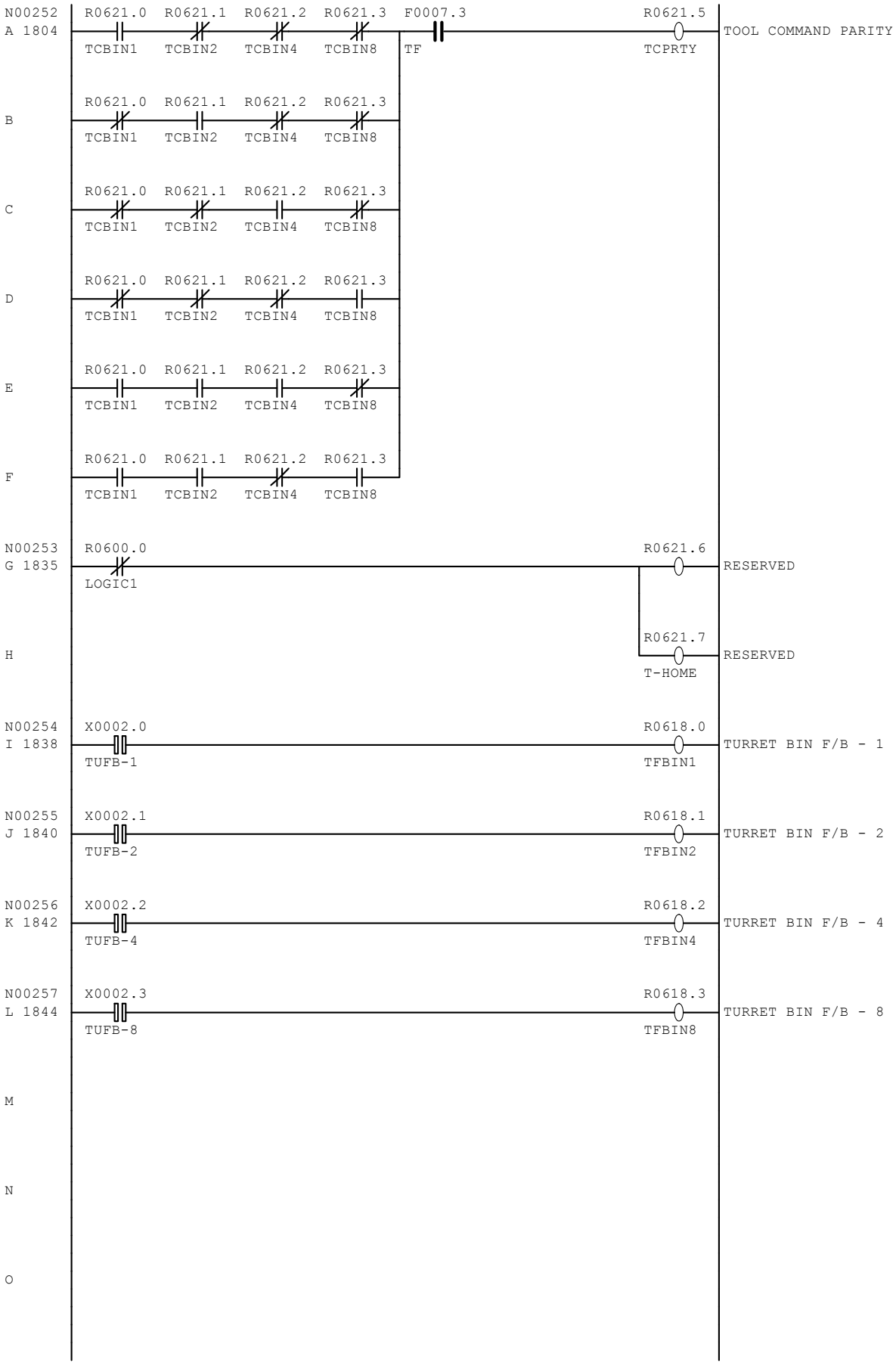
N00252
A 1804
R0621.0 TCBIN1
R0621.1 TCBIN2
R0621.2 TCBIN4
R0621.3 TCBIN8
F0007.3 TF
R0621.5 TCPRTY
TOOL COMMAND PARITY
B
C
D
E
F
N00253
G 1835
R0600.0 LOGIC1
R0621.6
RESERVED
H
R0621.7 T-HOME
RESERVED
N00254
I 1838
X0002.0 TUFB-1
R0618.0 TFBIN1
TURRET BIN F/B - 1
N00255
J 1840
X0002.1 TUFB-2
R0618.1 TFBIN2
TURRET BIN F/B - 2
N00256
K 1842
X0002.2 TUFB-4
R0618.2 TFBIN4
TURRET BIN F/B - 4
N00257
L 1844
X0002.3 TUFB-8
R0618.3 TFBIN8
TURRET BIN F/B - 8
M
N
O

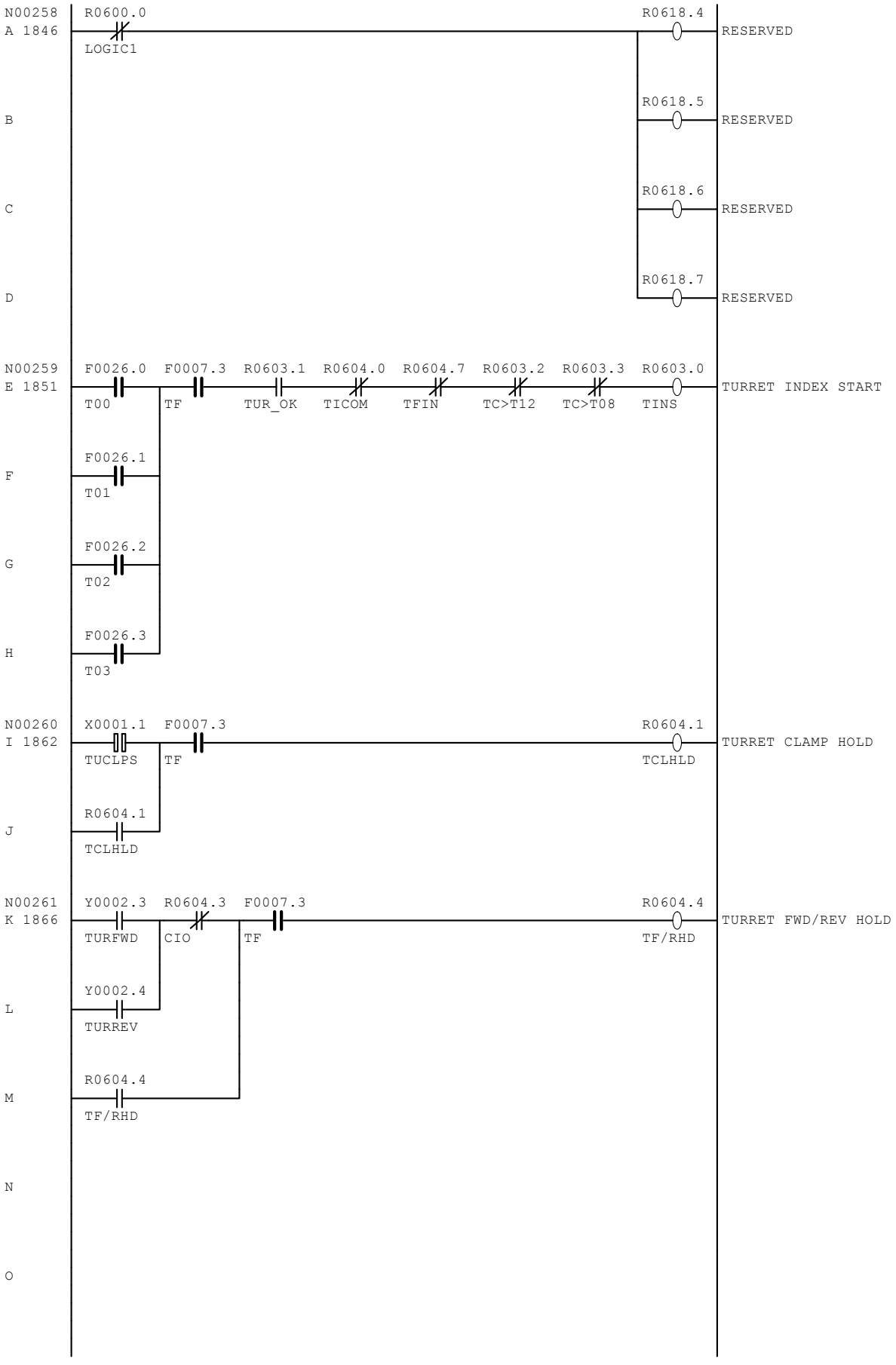
N00258
A 1846
R0600.0
LOGIC1
R0618.4
RESERVED
B
R0618.5
RESERVED
C
R0618.6
RESERVED
D
R0618.7
RESERVED
N00259
E 1851
F0026.0
T00
F0007.3
TF
R0603.1
TUR_OK
R0604.0
TICOM
R0604.7
TFIN
R0603.2
TC>T12
R0603.3
TC>T08
R0603.0
TINS
TURRET INDEX START
F
F0026.1
T01
G
F0026.2
T02
H
F0026.3
T03
N00260
I 1862
X0001.1
TUCLPS
F0007.3
TF
R0604.1
TCLHLD
TURRET CLAMP HOLD
J
R0604.1
TCLHLD
N00261
K 1866
Y0002.3
TURFWD
R0604.3
CIO
F0007.3
TF
R0604.4
TF/RHD
TURRET FWD/REV HOLD
L
Y0002.4
TURREV
M
R0604.4
TF/RHD
N
O

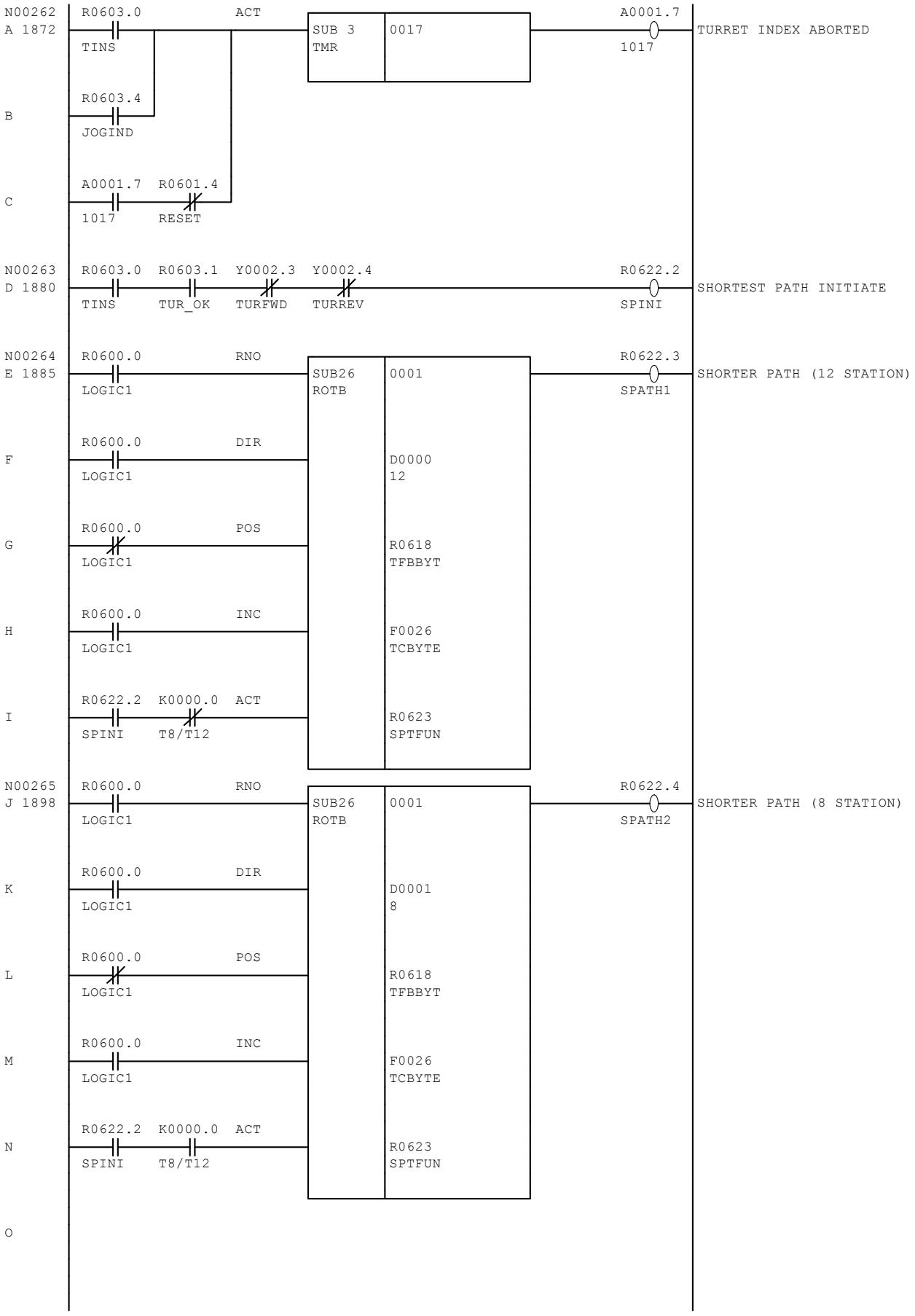
N00262
A 1872
R0603.0
TINS
ACT
SUB 3
TMR
0017
A0001.7
1017
TURRET INDEX ABORTED
B
R0603.4
JOGIND
C
A0001.7
1017
R0601.4
RESET
N00263
D 1880
R0603.0
TINS
R0603.1
TUR_OK
Y0002.3
TURFWD
Y0002.4
TURREV
R0622.2
SPINI
SHORTEST PATH INITIATE
N00264
E 1885
R0600.0
LOGIC1
RNO
SUB26
ROTB
0001
R0622.3
SPATH1
SHORTER PATH (12 STATION)
F
R0600.0
LOGIC1
DIR
D0000
12
G
R0600.0
LOGIC1
POS
R0618
TFBBYT
H
R0600.0
LOGIC1
INC
F0026
TCBYTE
I
R0622.2
SPINI
K0000.0
T8/T12
ACT
R0623
SPTFUN
N00265
J 1898
R0600.0
LOGIC1
RNO
SUB26
ROTB
0001
R0622.4
SPATH2
SHORTER PATH (8 STATION)
K
R0600.0
LOGIC1
DIR
D0001
8
L
R0600.0
LOGIC1
POS
R0618
TFBBYT
M
R0600.0
LOGIC1
INC
F0026
TCBYTE
N
R0622.2
SPINI
K0000.0
T8/T12
ACT
R0623
SPTFUN
O

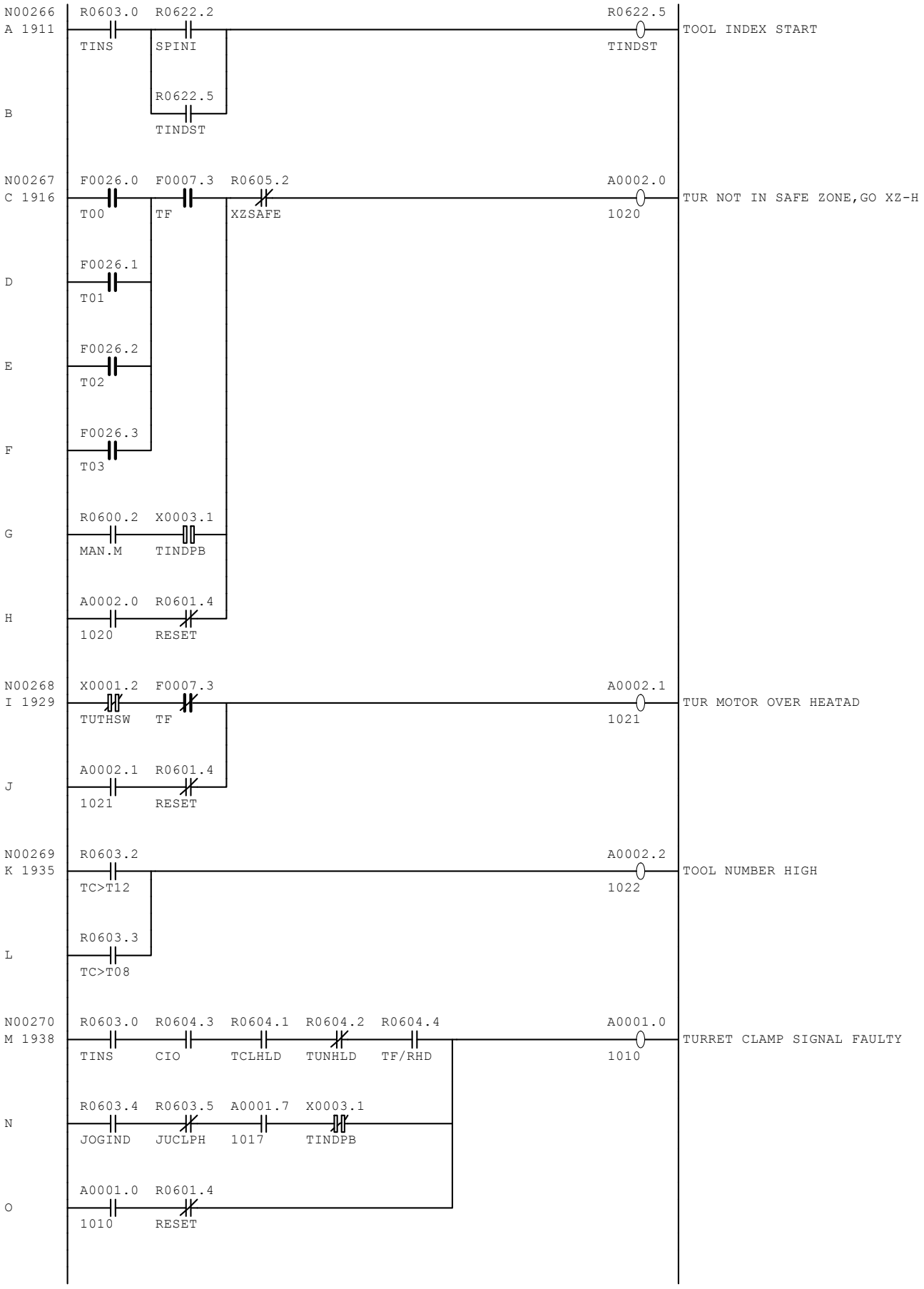
N00266
A 1911
R0603.0
TINS
R0622.2
SPINI
R0622.5
TINDST
B
R0622.5
TINDST
TOOL INDEX START
N00267
C 1916
F0026.0
T00
F0007.3
TF
R0605.2
XZSAFE
A0002.0
1020
TUR NOT IN SAFE ZONE,GO XZ-H
D
F0026.1
T01
E
F0026.2
T02
F
F0026.3
T03
G
R0600.2
MAN.M
X0003.1
TINDPB
H
A0002.0
1020
R0601.4
RESET
N00268
I 1929
X0001.2
TUTHSW
F0007.3
TF
A0002.1
1021
TUR MOTOR OVER HEATAD
J
A0002.1
1021
R0601.4
RESET
N00269
K 1935
R0603.2
TC>T12
A0002.2
1022
TOOL NUMBER HIGH
L
R0603.3
TC>T08
N00270
M 1938
R0603.0
TINS
R0604.3
CIO
R0604.1
TCLHLD
R0604.2
TUNHLD
R0604.4
TF/RHD
A0001.0
1010
TURRET CLAMP SIGNAL FAULTY
N
R0603.4
JOGIND
R0603.5
JUCLPH
A0001.7
1017
X0003.1
TINDPB
O
A0001.0
1010
R0601.4
RESET

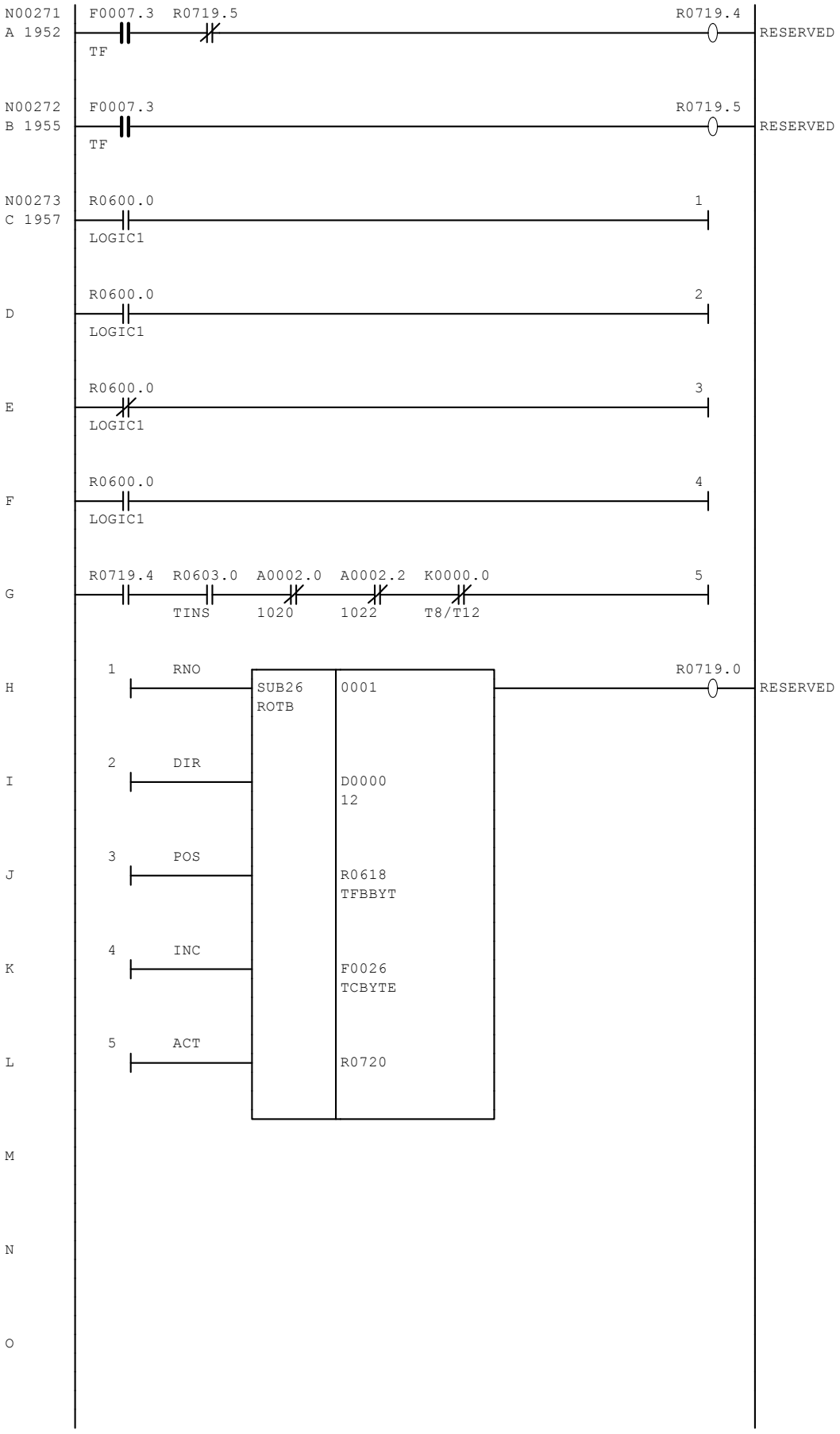
N00271
A 1952
F0007.3
R0719.5
TF
R0719.4
RESERVED
N00272
B 1955
F0007.3
TF
R0719.5
RESERVED
N00273
C 1957
R0600.0
LOGIC1
1
D
R0600.0
LOGIC1
2
E
R0600.0
LOGIC1
3
F
R0600.0
LOGIC1
4
G
R0719.4
R0603.0
TINS
A0002.0
1020
A0002.2
1022
K0000.0
T8/T12
5
H
1
RNO
SUB26
ROTB
0001
R0719.0
RESERVED
I
2
DIR
D0000
12
J
3
POS
R0618
TFBBYT
K
4
INC
F0026
TCBYTE
L
5
ACT
R0720
M
N
O

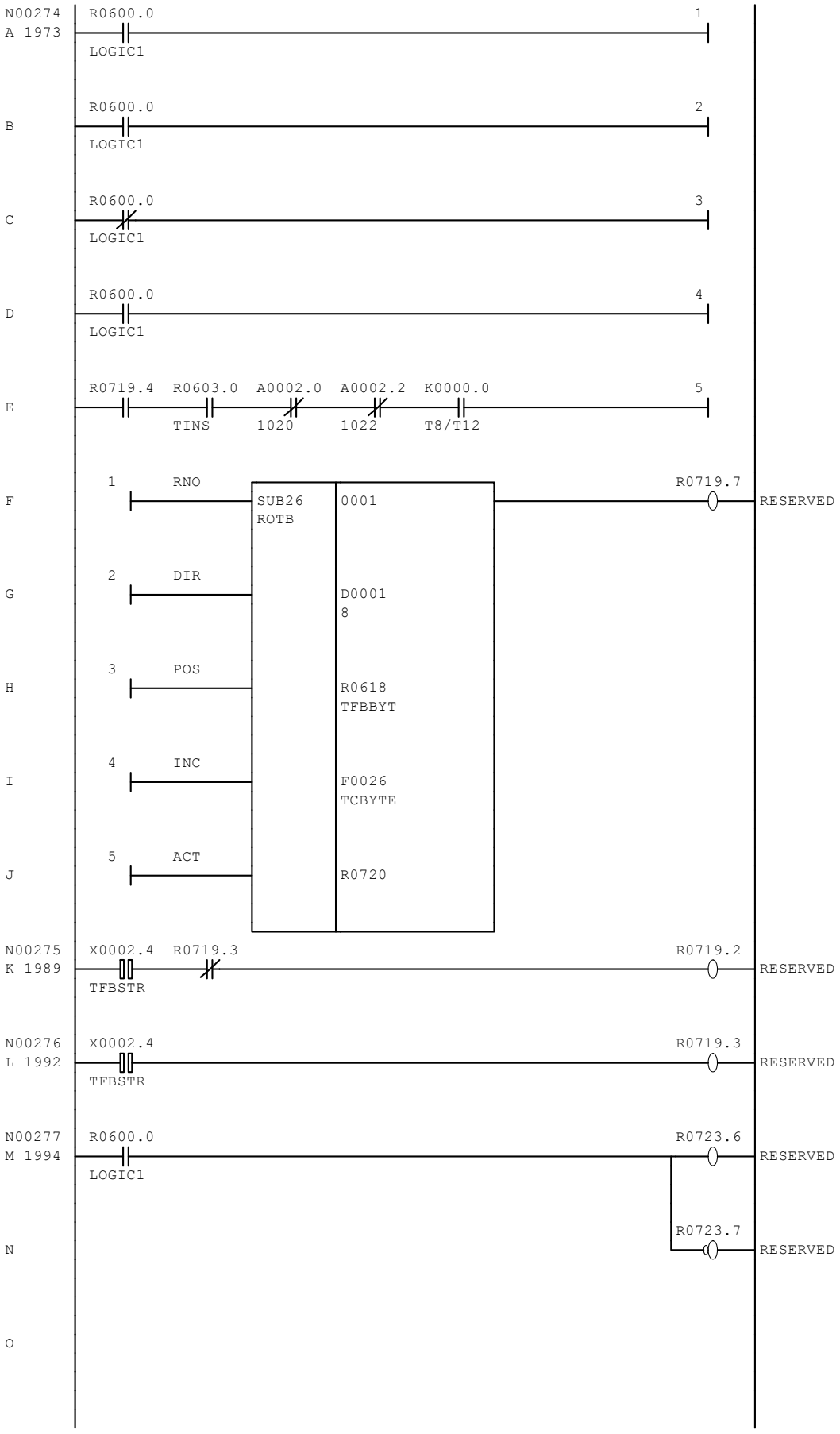
N00274
A 1973
R0600.0
LOGIC1
1
B
R0600.0
LOGIC1
2
C
R0600.0
LOGIC1
3
D
R0600.0
LOGIC1
4
E
R0719.4
R0603.0
TINS
A0002.0
1020
A0002.2
1022
K0000.0
T8/T12
5
F
1
RNO
SUB26
ROTB
0001
R0719.7
RESERVED
G
2
DIR
D0001
8
H
3
POS
R0618
TFBBYT
I
4
INC
F0026
TCBYTE
J
5
ACT
R0720
N00275
K 1989
X0002.4
TFBSTR
R0719.3
R0719.2
RESERVED
N00276
L 1992
X0002.4
TFBSTR
R0719.3
RESERVED
N00277
M 1994
R0600.0
LOGIC1
R0723.6
RESERVED
N
R0723.7
RESERVED
O

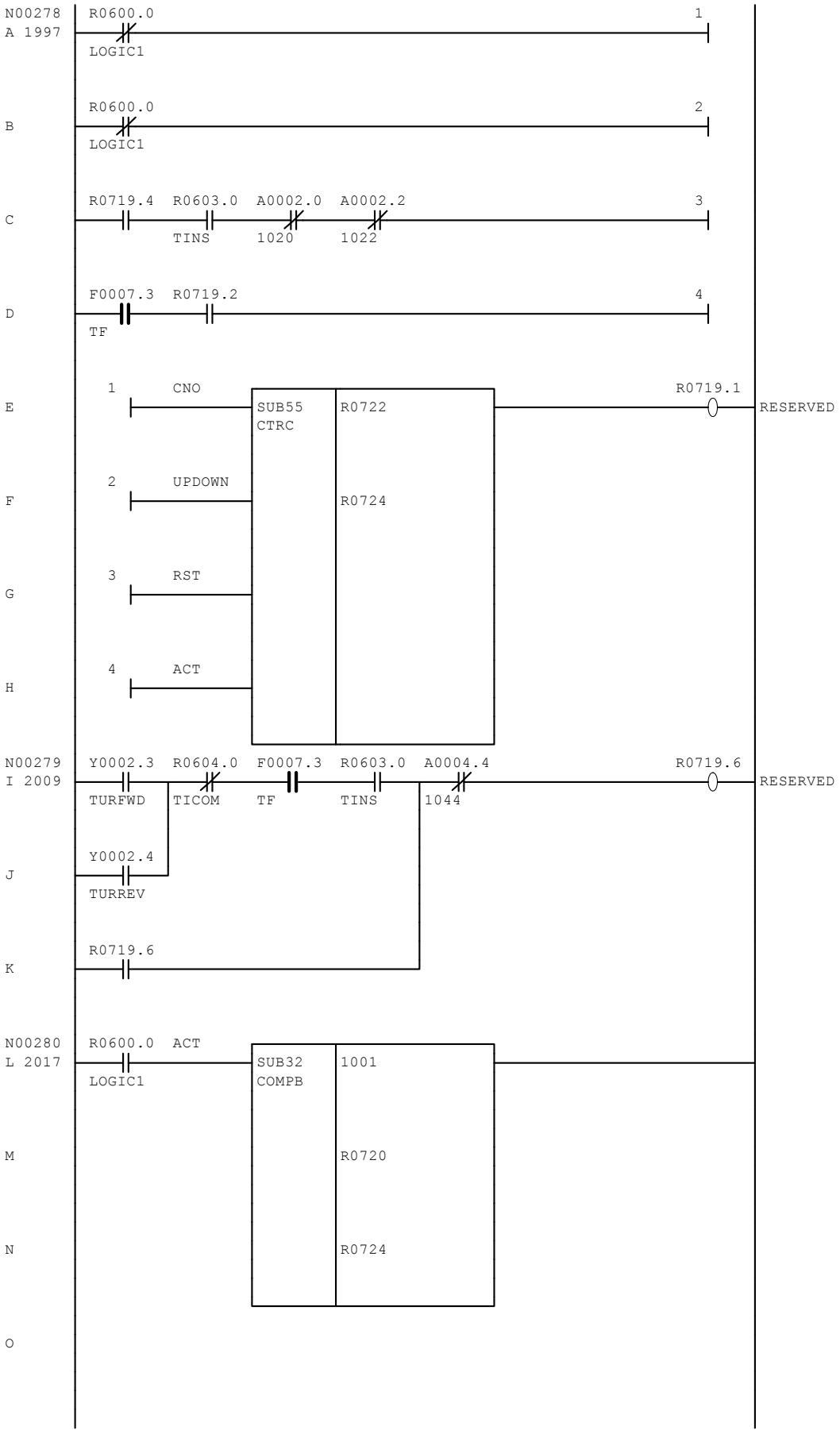
N00278
A 1997
R0600.0
LOGIC1
1
B
R0600.0
LOGIC1
2
C
R0719.4
R0603.0
TINS
A0002.0
1020
A0002.2
1022
3
D
F0007.3
TF
R0719.2
4
E
1
CNO
SUB55
CTRC
R0722
R0719.1
RESERVED
F
2
UPDOWN
R0724
G
3
RST
H
4
ACT
N00279
I 2009
Y0002.3
TURFWD
R0604.0
TICOM
F0007.3
TF
R0603.0
TINS
A0004.4
1044
R0719.6
RESERVED
J
Y0002.4
TURREV
K
R0719.6
N00280
L 2017
R0600.0
LOGIC1
ACT
SUB32
COMPB
1001
M
R0720
N
R0724
O

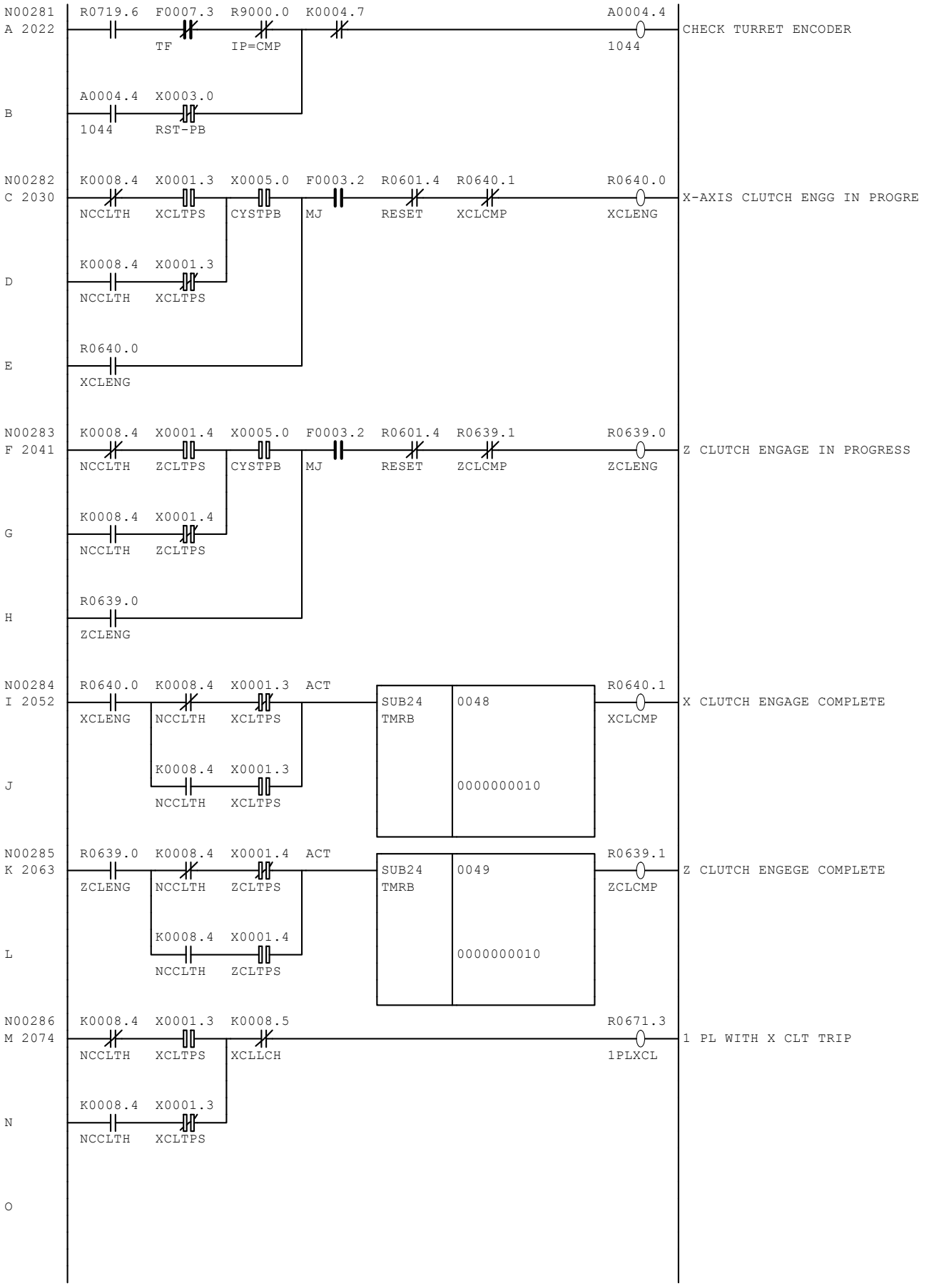
N00281
A 2022
R0719.6
F0007.3
TF
R9000.0
IP=CMP
K0004.7
A0004.4
1044
CHECK TURRET ENCODER
B
A0004.4
1044
X0003.0
RST-PB
N00282
C 2030
K0008.4
NCCLTH
X0001.3
XCLTPS
X0005.0
CYSTPB
F0003.2
MJ
R0601.4
RESET
R0640.1
XCLCMP
R0640.0
XCLENG
X-AXIS CLUTCH ENGG IN PROGRE
D
K0008.4
NCCLTH
X0001.3
XCLTPS
E
R0640.0
XCLENG
N00283
F 2041
K0008.4
NCCLTH
X0001.4
ZCLTPS
X0005.0
CYSTPB
F0003.2
MJ
R0601.4
RESET
R0639.1
ZCLCMP
R0639.0
ZCLENG
Z CLUTCH ENGAGE IN PROGRESS
G
K0008.4
NCCLTH
X0001.4
ZCLTPS
H
R0639.0
ZCLENG
N00284
I 2052
R0640.0
XCLENG
K0008.4
NCCLTH
X0001.3
XCLTPS
ACT
SUB24
TMRB
0048
0000000010
R0640.1
XCLCMP
X CLUTCH ENGAGE COMPLETE
J
K0008.4
NCCLTH
X0001.3
XCLTPS
N00285
K 2063
R0639.0
ZCLENG
K0008.4
NCCLTH
X0001.4
ZCLTPS
ACT
SUB24
TMRB
0049
0000000010
R0639.1
ZCLCMP
Z CLUTCH ENGEGE COMPLETE
L
K0008.4
NCCLTH
X0001.4
ZCLTPS
N00286
M 2074
K0008.4
NCCLTH
X0001.3
XCLTPS
K0008.5
XCLLCH
R0671.3
1PLXCL
1 PL WITH X CLT TRIP
N
K0008.4
NCCLTH
X0001.3
XCLTPS
O

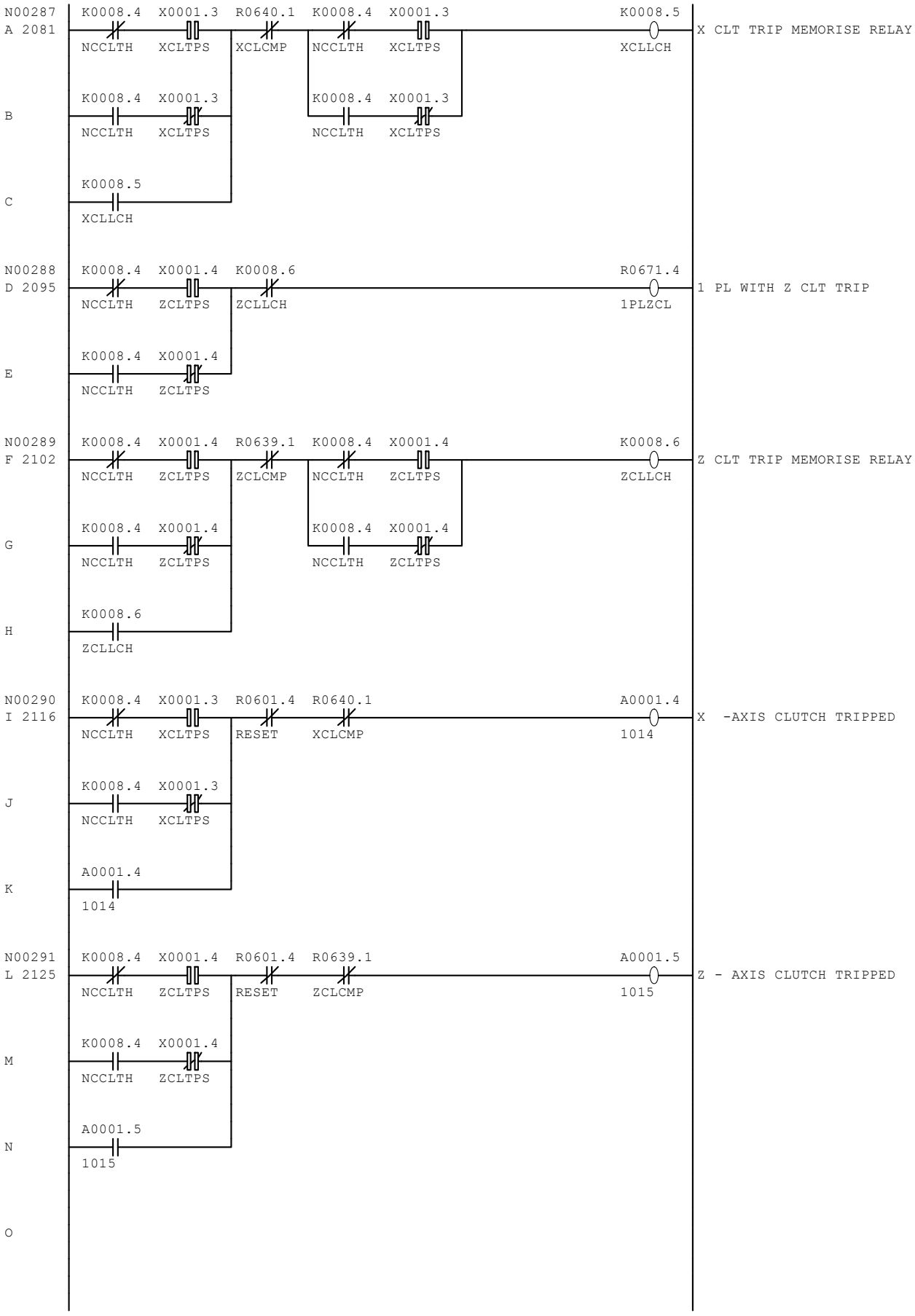
N00287
A 2081
K0008.4 NCCLTH
X0001.3 XCLTPS
R0640.1 XCLCMP
K0008.4 NCCLTH
X0001.3 XCLTPS
K0008.5 XCLLCH
X CLT TRIP MEMORISE RELAY
B
K0008.4 NCCLTH
X0001.3 XCLTPS
K0008.4 NCCLTH
X0001.3 XCLTPS
C
K0008.5 XCLLCH
N00288
D 2095
K0008.4 NCCLTH
X0001.4 ZCLTPS
K0008.6 ZCLLCH
R0671.4 1PLZCL
1 PL WITH Z CLT TRIP
E
K0008.4 NCCLTH
X0001.4 ZCLTPS
N00289
F 2102
K0008.4 NCCLTH
X0001.4 ZCLTPS
R0639.1 ZCLCMP
K0008.4 NCCLTH
X0001.4 ZCLTPS
K0008.6 ZCLLCH
Z CLT TRIP MEMORISE RELAY
G
K0008.4 NCCLTH
X0001.4 ZCLTPS
K0008.4 NCCLTH
X0001.4 ZCLTPS
H
K0008.6 ZCLLCH
N00290
I 2116
K0008.4 NCCLTH
X0001.3 XCLTPS
R0601.4 RESET
R0640.1 XCLCMP
A0001.4 1014
X -AXIS CLUTCH TRIPPED
J
K0008.4 NCCLTH
X0001.3 XCLTPS
K
A0001.4 1014
N00291
L 2125
K0008.4 NCCLTH
X0001.4 ZCLTPS
R0601.4 RESET
R0639.1 ZCLCMP
A0001.5 1015
Z - AXIS CLUTCH TRIPPED
M
K0008.4 NCCLTH
X0001.4 ZCLTPS
N
A0001.5 1015
O

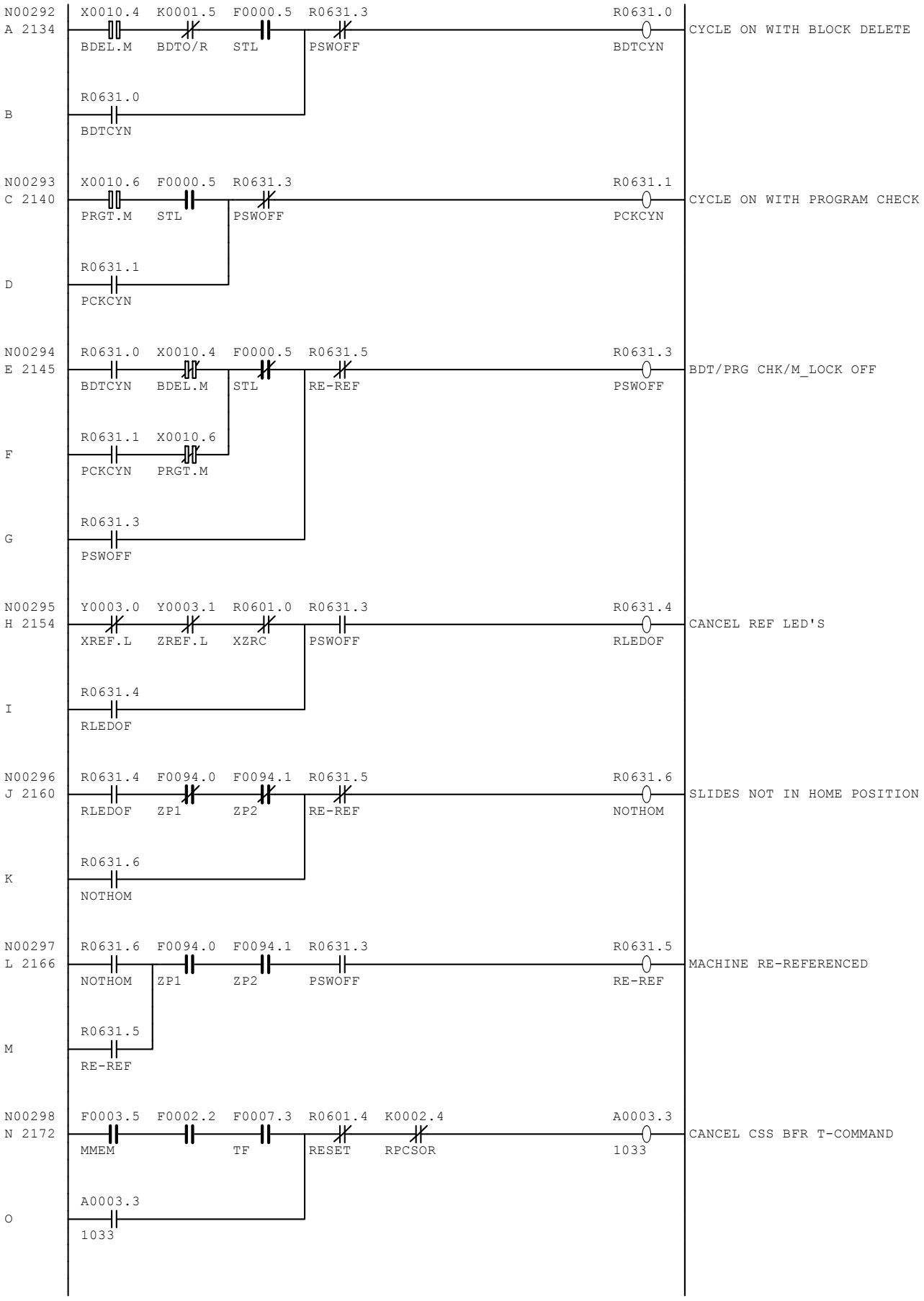
N00292
A 2134
X0010.4
BDEL.M
K0001.5
BDTO/R
F0000.5
STL
R0631.3
PSWOFF
R0631.0
BDTCYN
CYCLE ON WITH BLOCK DELETE
B
R0631.0
BDTCYN
N00293
C 2140
X0010.6
PRGT.M
F0000.5
STL
R0631.3
PSWOFF
R0631.1
PCKCYN
CYCLE ON WITH PROGRAM CHECK
D
R0631.1
PCKCYN
N00294
E 2145
R0631.0
BDTCYN
X0010.4
BDEL.M
F0000.5
STL
R0631.5
RE-REF
R0631.3
PSWOFF
BDT/PRG CHK/M_LOCK OFF
F
R0631.1
PCKCYN
X0010.6
PRGT.M
G
R0631.3
PSWOFF
N00295
H 2154
Y0003.0
XREF.L
Y0003.1
ZREF.L
R0601.0
XZRC
R0631.3
PSWOFF
R0631.4
RLEDOF
CANCEL REF LED'S
I
R0631.4
RLEDOF
N00296
J 2160
R0631.4
RLEDOF
F0094.0
ZP1
F0094.1
ZP2
R0631.5
RE-REF
R0631.6
NOTHOM
SLIDES NOT IN HOME POSITION
K
R0631.6
NOTHOM
N00297
L 2166
R0631.6
NOTHOM
F0094.0
ZP1
F0094.1
ZP2
R0631.3
PSWOFF
R0631.5
RE-REF
MACHINE RE-REFERENCED
M
R0631.5
RE-REF
N00298
N 2172
F0003.5
MMEM
F0002.2
F0007.3
TF
R0601.4
RESET
K0002.4
RPCSOR
A0003.3
1033
CANCEL CSS BFR T-COMMAND
O
A0003.3
1033

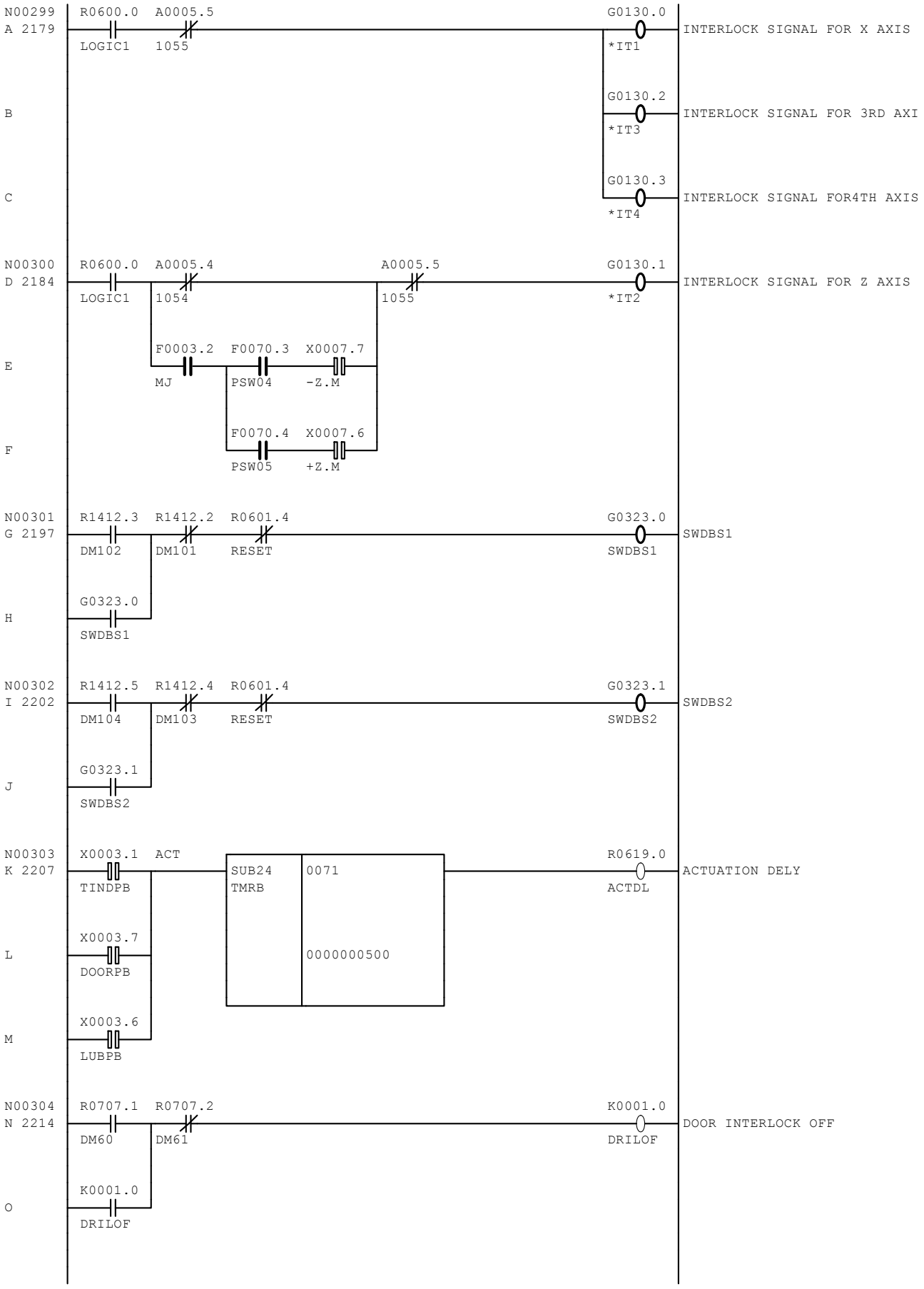
N00299
A 2179
R0600.0
LOGIC1
A0005.5
1055
G0130.0
*IT1
INTERLOCK SIGNAL FOR X AXIS
B
G0130.2
*IT3
INTERLOCK SIGNAL FOR 3RD AXI
C
G0130.3
*IT4
INTERLOCK SIGNAL FOR4TH AXIS
N00300
D 2184
R0600.0
LOGIC1
A0005.4
1054
A0005.5
1055
G0130.1
*IT2
INTERLOCK SIGNAL FOR Z AXIS
E
F0003.2
MJ
F0070.3
PSW04
X0007.7
-Z.M
F
F0070.4
PSW05
X0007.6
+Z.M
N00301
G 2197
R1412.3
DM102
R1412.2
DM101
R0601.4
RESET
G0323.0
SWDBS1
SWDBS1
H
G0323.0
SWDBS1
N00302
I 2202
R1412.5
DM104
R1412.4
DM103
R0601.4
RESET
G0323.1
SWDBS2
SWDBS2
J
G0323.1
SWDBS2
N00303
K 2207
X0003.1
TINDPB
ACT
SUB24
TMRB
0071
0000000500
R0619.0
ACTDL
ACTUATION DELY
L
X0003.7
DOORPB
M
X0003.6
LUBPB
N00304
N 2214
R0707.1
DM60
R0707.2
DM61
K0001.0
DRILOF
DOOR INTERLOCK OFF
O
K0001.0
DRILOF

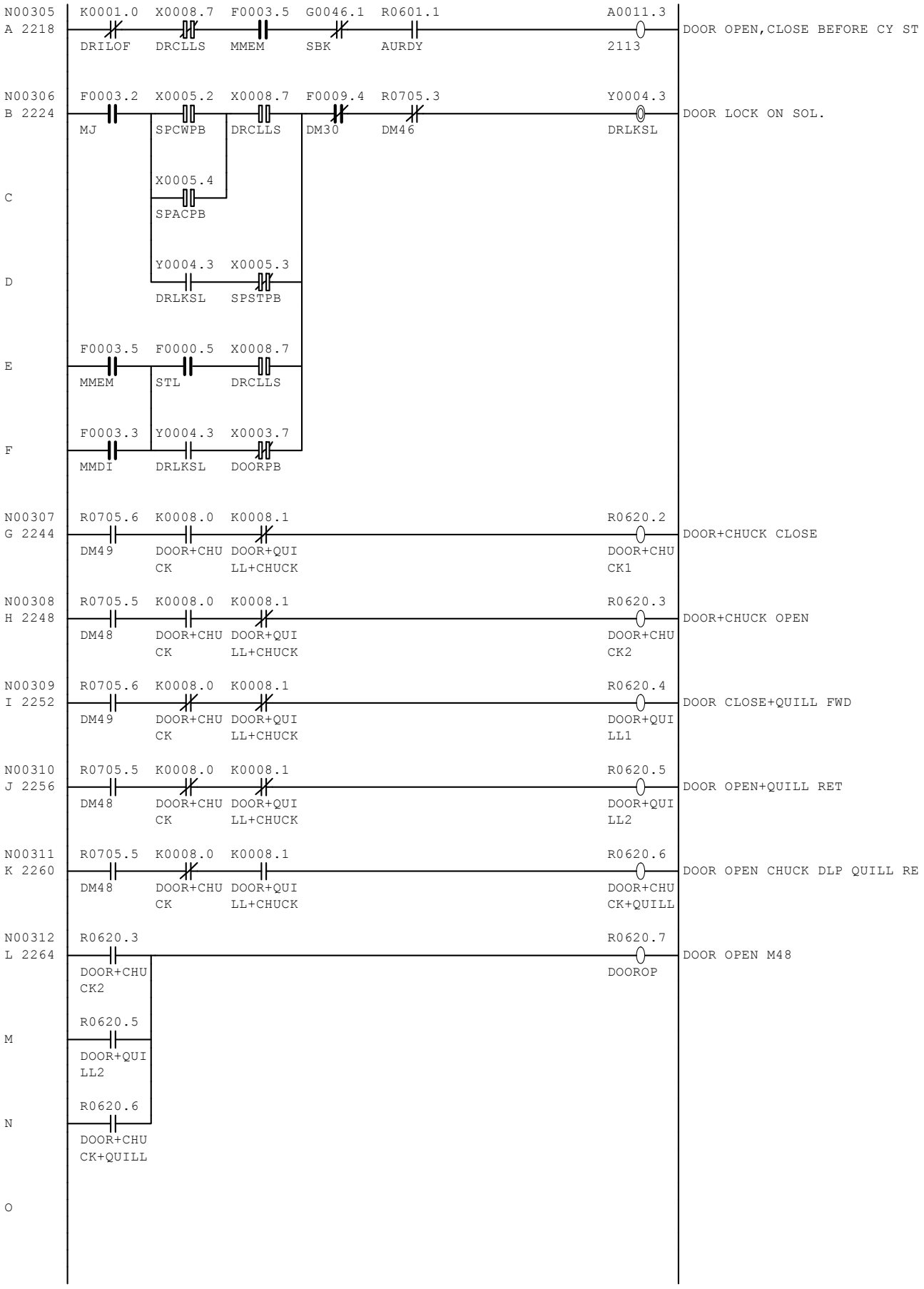
N00305
A 2218
K0001.0
DRILOF
X0008.7
DRCLLS
F0003.5
MMEM
G0046.1
SBK
R0601.1
AURDY
A0011.3
2113
DOOR OPEN,CLOSE BEFORE CY ST
N00306
B 2224
F0003.2
MJ
X0005.2
SPCWPB
X0008.7
DRCLLS
F0009.4
DM30
R0705.3
DM46
Y0004.3
DRLKSL
DOOR LOCK ON SOL.
C
X0005.4
SPACPB
D
Y0004.3
DRLKSL
X0005.3
SPSTPB
E
F0003.5
MMEM
F0000.5
STL
X0008.7
DRCLLS
F
F0003.3
MMDI
Y0004.3
DRLKSL
X0003.7
DOORPB
N00307
G 2244
R0705.6
DM49
K0008.0
DOOR+CHU CK
K0008.1
DOOR+QUI LL+CHUCK
R0620.2
DOOR+CHU CK1
DOOR+CHUCK CLOSE
N00308
H 2248
R0705.5
DM48
K0008.0
DOOR+CHU CK
K0008.1
DOOR+QUI LL+CHUCK
R0620.3
DOOR+CHU CK2
DOOR+CHUCK OPEN
N00309
I 2252
R0705.6
DM49
K0008.0
DOOR+CHU CK
K0008.1
DOOR+QUI LL+CHUCK
R0620.4
DOOR+QUI LL1
DOOR CLOSE+QUILL FWD
N00310
J 2256
R0705.5
DM48
K0008.0
DOOR+CHU CK
K0008.1
DOOR+QUI LL+CHUCK
R0620.5
DOOR+QUI LL2
DOOR OPEN+QUILL RET
N00311
K 2260
R0705.5
DM48
K0008.0
DOOR+CHU CK
K0008.1
DOOR+QUI LL+CHUCK
R0620.6
DOOR+CHU CK+QUILL
DOOR OPEN CHUCK DLP QUILL RE
N00312
L 2264
R0620.3
DOOR+CHU CK2
R0620.7
DOOROP
DOOR OPEN M48
M
R0620.5
DOOR+QUI LL2
N
R0620.6
DOOR+CHU CK+QUILL
O

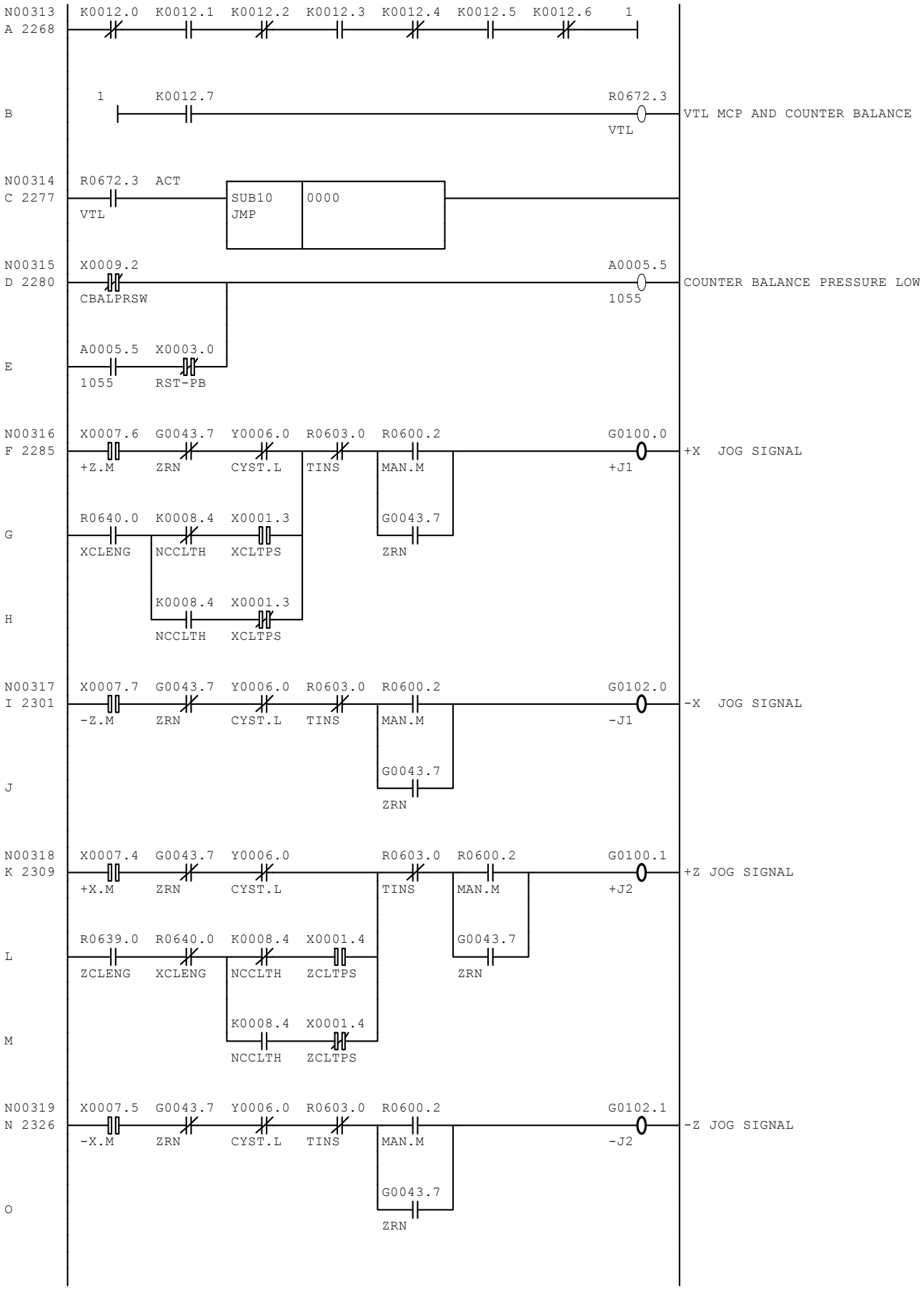
N00313
A 2268
K0012.0 K0012.1 K0012.2 K0012.3 K0012.4 K0012.5 K0012.6 1
B
1 K0012.7
R0672.3
VTL
VTL MCP AND COUNTER BALANCE
N00314
C 2277
R0672.3 ACT
VTL
SUB10
JMP
0000
N00315
D 2280
X0009.2
CBALPRSW
A0005.5
1055
COUNTER BALANCE PRESSURE LOW
E
A0005.5 X0003.0
1055 RST-PB
N00316
F 2285
X0007.6 G0043.7 Y0006.0 R0603.0 R0600.2
+Z.M ZRN CYST.L TINS MAN.M
G0100.0
+J1
+X JOG SIGNAL
G
R0640.0 K0008.4 X0001.3 G0043.7
XCLENG NCCLTH XCLTPS ZRN
H
K0008.4 X0001.3
NCCLTH XCLTPS
N00317
I 2301
X0007.7 G0043.7 Y0006.0 R0603.0 R0600.2
-Z.M ZRN CYST.L TINS MAN.M
G0102.0
-J1
-X JOG SIGNAL
J
G0043.7
ZRN
N00318
K 2309
X0007.4 G0043.7 Y0006.0 R0603.0 R0600.2
+X.M ZRN CYST.L TINS MAN.M
G0100.1
+J2
+Z JOG SIGNAL
L
R0639.0 R0640.0 K0008.4 X0001.4 G0043.7
ZCLENG XCLENG NCCLTH ZCLTPS ZRN
M
K0008.4 X0001.4
NCCLTH ZCLTPS
N00319
N 2326
X0007.5 G0043.7 Y0006.0 R0603.0 R0600.2
-X.M ZRN CYST.L TINS MAN.M
G0102.1
-J2
-Z JOG SIGNAL
O
G0043.7
ZRN

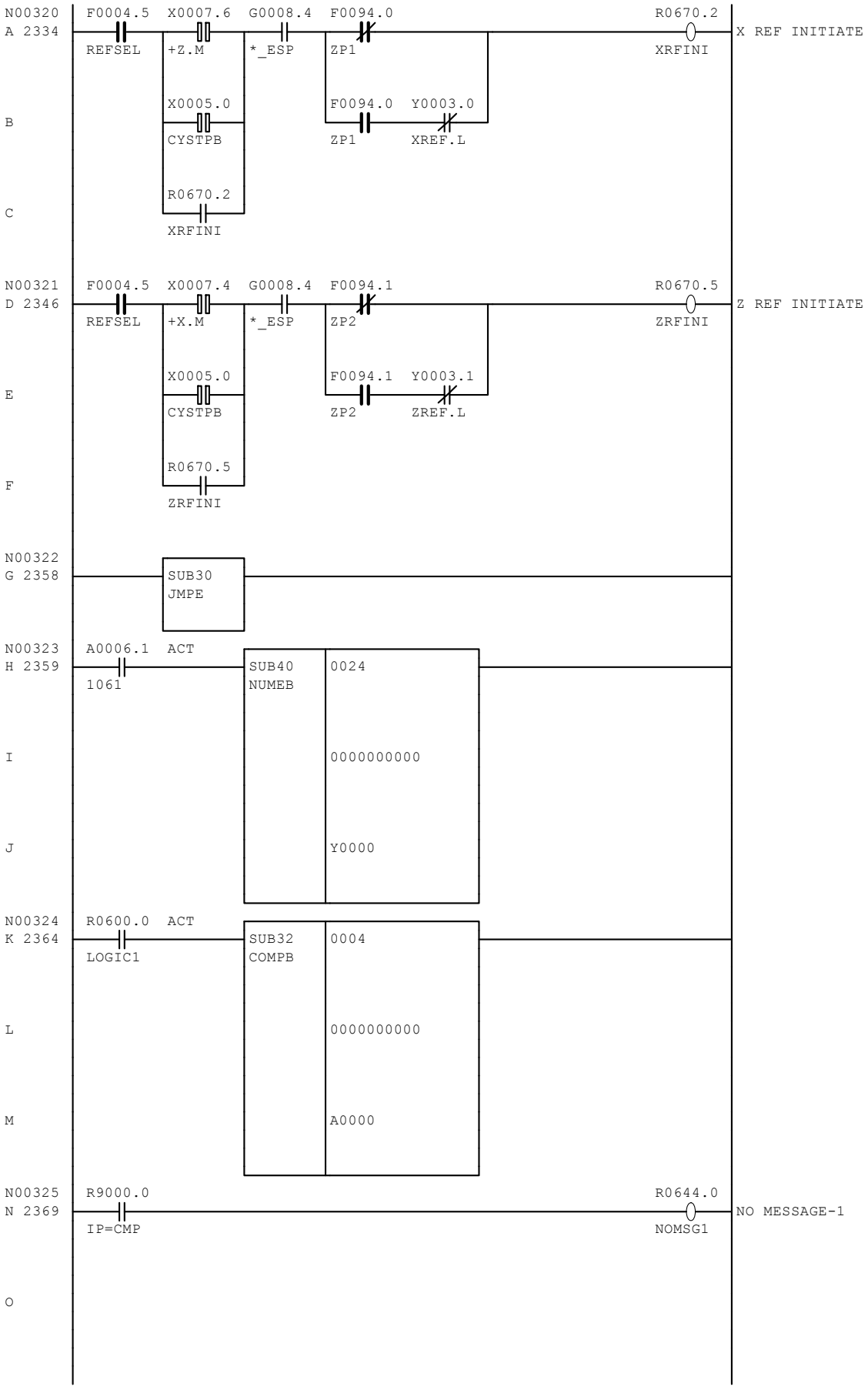
N00320
A 2334
F0004.5
REFSEL
X0007.6
+Z.M
G0008.4
*_ESP
F0094.0
ZP1
R0670.2
XRFINI
X REF INITIATE
X0005.0
CYSTPB
F0094.0
ZP1
Y0003.0
XREF.L
B
R0670.2
XRFINI
C
N00321
D 2346
F0004.5
REFSEL
X0007.4
+X.M
G0008.4
*_ESP
F0094.1
ZP2
R0670.5
ZRFINI
Z REF INITIATE
X0005.0
CYSTPB
F0094.1
ZP2
Y0003.1
ZREF.L
E
R0670.5
ZRFINI
F
N00322
G 2358
SUB30
JMPE
N00323
H 2359
A0006.1
1061
ACT
SUB40
NUMEB
0024
0000000000
Y0000
I
J
N00324
K 2364
R0600.0
LOGIC1
ACT
SUB32
COMPB
0004
0000000000
A0000
L
M
N00325
N 2369
R9000.0
IP=CMP
R0644.0
NOMSG1
NO MESSAGE-1
O

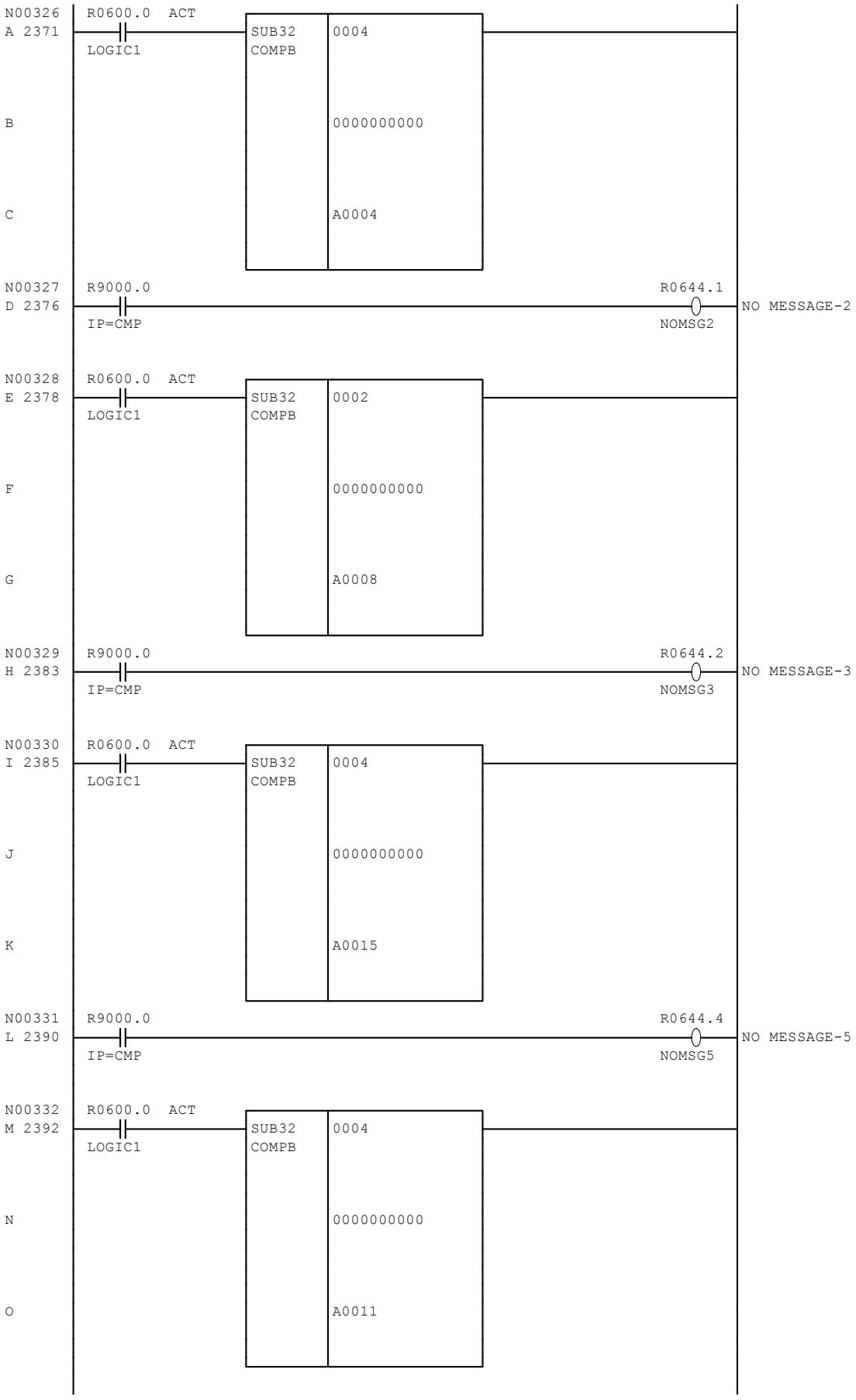
N00326
A 2371
R0600.0 ACT
LOGIC1
SUB32
COMPB
0004
B
0000000000
C
A0004
N00327
D 2376
R9000.0
IP=CMP
R0644.1
NOMSG2
NO MESSAGE-2
N00328
E 2378
R0600.0 ACT
LOGIC1
SUB32
COMPB
0002
F
0000000000
G
A0008
N00329
H 2383
R9000.0
IP=CMP
R0644.2
NOMSG3
NO MESSAGE-3
N00330
I 2385
R0600.0 ACT
LOGIC1
SUB32
COMPB
0004
J
0000000000
K
A0015
N00331
L 2390
R9000.0
IP=CMP
R0644.4
NOMSG5
NO MESSAGE-5
N00332
M 2392
R0600.0 ACT
LOGIC1
SUB32
COMPB
0004
N
0000000000
O
A0011

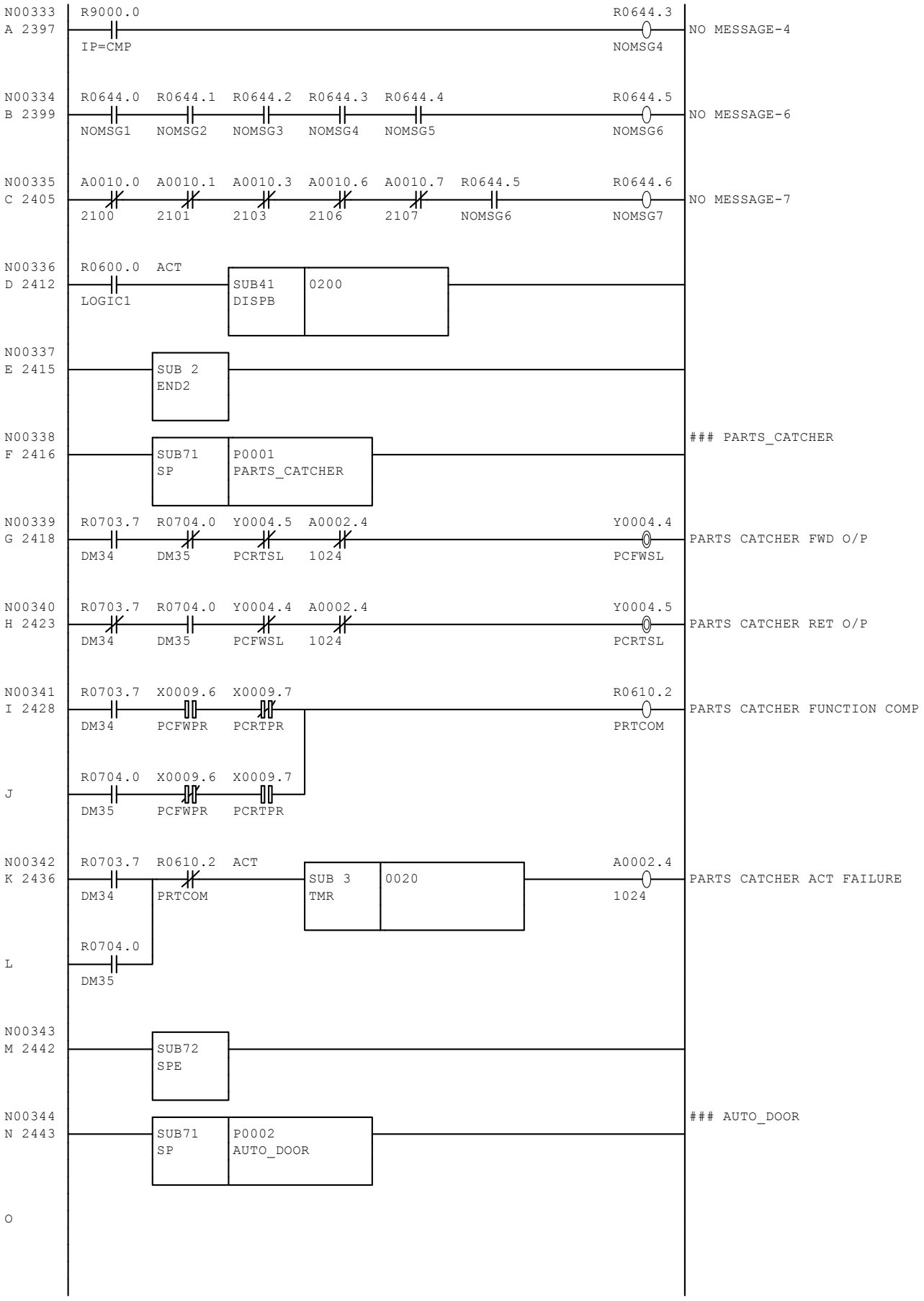
N00333
A 2397
R9000.0
IP=CMP
R0644.3
NOMSG4
NO MESSAGE-4
N00334
B 2399
R0644.0 R0644.1 R0644.2 R0644.3 R0644.4
NOMSG1 NOMSG2 NOMSG3 NOMSG4 NOMSG5
R0644.5
NOMSG6
NO MESSAGE-6
N00335
C 2405
A0010.0 A0010.1 A0010.3 A0010.6 A0010.7 R0644.5
2100 2101 2103 2106 2107 NOMSG6
R0644.6
NOMSG7
NO MESSAGE-7
N00336
D 2412
R0600.0 ACT
LOGIC1
SUB41 0200
DISPB
N00337
E 2415
SUB 2
END2
N00338
F 2416
SUB71 P0001
SP PARTS_CATCHER
PARTS_CATCHER
N00339
G 2418
R0703.7 R0704.0 Y0004.5 A0002.4
DM34 DM35 PCRTSL 1024
Y0004.4
PCFWSL
PARTS CATCHER FWD O/P
N00340
H 2423
R0703.7 R0704.0 Y0004.4 A0002.4
DM34 DM35 PCFWSL 1024
Y0004.5
PCRTSL
PARTS CATCHER RET O/P
N00341
I 2428
R0703.7 X0009.6 X0009.7
DM34 PCFWPR PCRTPR
R0610.2
PRTCOM
PARTS CATCHER FUNCTION COMP
J
R0704.0 X0009.6 X0009.7
DM35 PCFWPR PCRTPR
N00342
K 2436
R0703.7 R0610.2 ACT
DM34 PRTCOM
SUB 3 0020
TMR
A0002.4
1024
PARTS CATCHER ACT FAILURE
L
R0704.0
DM35
N00343
M 2442
SUB72
SPE
N00344
N 2443
SUB71 P0002
SP AUTO_DOOR
AUTO_DOOR
O

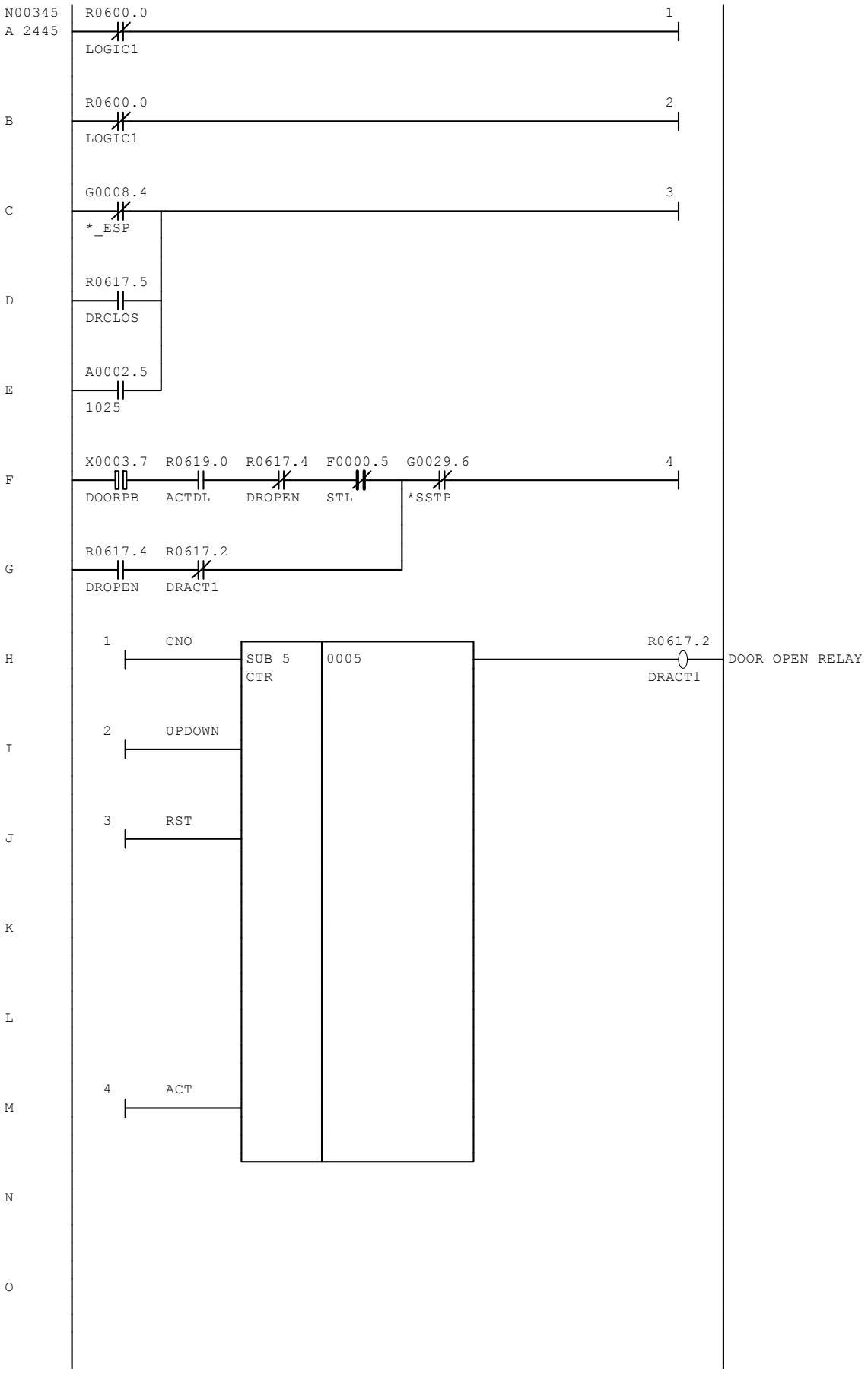
N00345
A 2445
R0600.0
LOGIC1
1
B
R0600.0
LOGIC1
2
C
G0008.4
*_ESP
3
D
R0617.5
DRCLOS
E
A0002.5
1025
F
X0003.7
DOORPB
R0619.0
ACTDL
R0617.4
DROPEN
F0000.5
STL
G0029.6
*SSTP
4
G
R0617.4
DROPEN
R0617.2
DRACT1
H
1
CNO
SUB 5
CTR
0005
R0617.2
DRACT1
DOOR OPEN RELAY
I
2
UPDOWN
J
3
RST
K
L
M
4
ACT
N
O

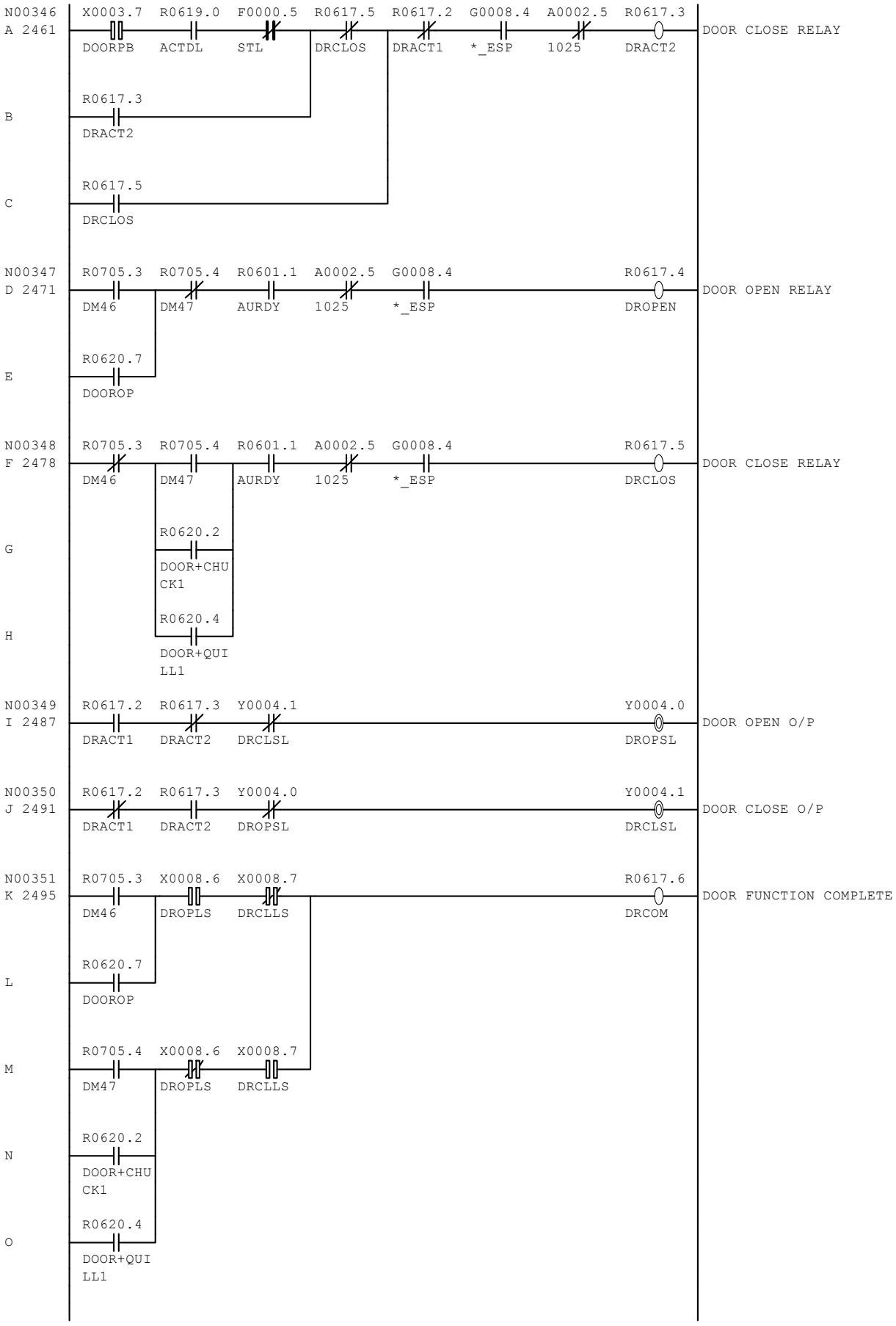
N00346
A 2461
X0003.7
DOORPB
R0619.0
ACTDL
F0000.5
STL
R0617.5
DRCLOS
R0617.2
DRACT1
G0008.4
*_ESP
A0002.5
1025
R0617.3
DRACT2
DOOR CLOSE RELAY
B
R0617.3
DRACT2
C
R0617.5
DRCLOS
N00347
D 2471
R0705.3
DM46
R0705.4
DM47
R0601.1
AURDY
A0002.5
1025
G0008.4
*_ESP
R0617.4
DROPEN
DOOR OPEN RELAY
E
R0620.7
DOOROP
N00348
F 2478
R0705.3
DM46
R0705.4
DM47
R0601.1
AURDY
A0002.5
1025
G0008.4
*_ESP
R0617.5
DRCLOS
DOOR CLOSE RELAY
G
R0620.2
DOOR+CHU
CK1
H
R0620.4
DOOR+QUI
LL1
N00349
I 2487
R0617.2
DRACT1
R0617.3
DRACT2
Y0004.1
DRCLSL
Y0004.0
DROPSL
DOOR OPEN O/P
N00350
J 2491
R0617.2
DRACT1
R0617.3
DRACT2
Y0004.0
DROPSL
Y0004.1
DRCLSL
DOOR CLOSE O/P
N00351
K 2495
R0705.3
DM46
X0008.6
DROPLS
X0008.7
DRCLLS
R0617.6
DRCOM
DOOR FUNCTION COMPLETE
L
R0620.7
DOOROP
M
R0705.4
DM47
X0008.6
DROPLS
X0008.7
DRCLLS
N
R0620.2
DOOR+CHU
CK1
O
R0620.4
DOOR+QUI
LL1

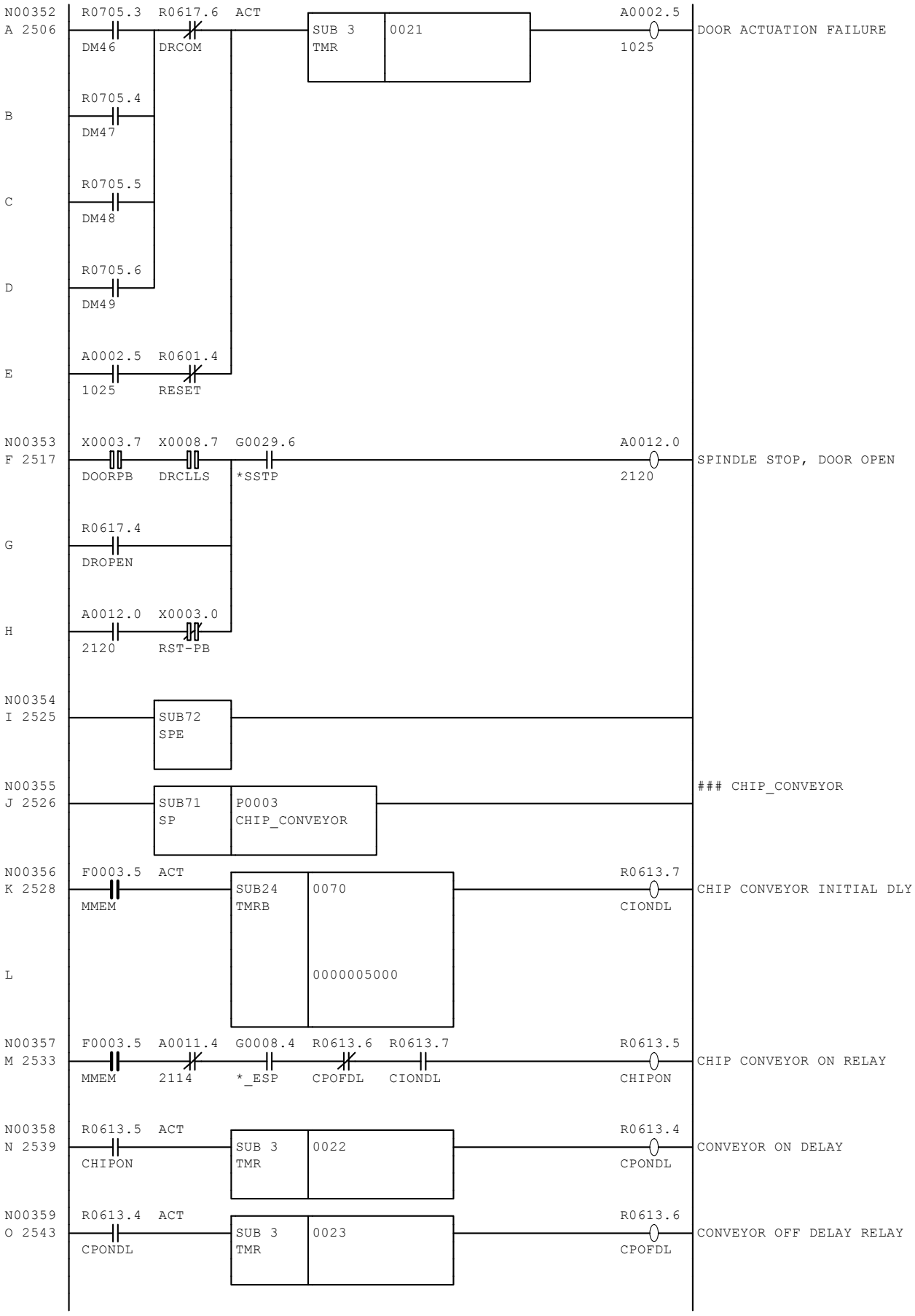
N00352
A 2506
R0705.3
DM46
R0617.6
DRCOM
ACT
SUB 3
TMR
0021
A0002.5
1025
DOOR ACTUATION FAILURE
B
R0705.4
DM47
C
R0705.5
DM48
D
R0705.6
DM49
E
A0002.5
1025
R0601.4
RESET
N00353
F 2517
X0003.7
DOORPB
X0008.7
DRCLLS
G0029.6
*SSTP
A0012.0
2120
SPINDLE STOP, DOOR OPEN
G
R0617.4
DROPEN
H
A0012.0
2120
X0003.0
RST-PB
N00354
I 2525
SUB72
SPE
N00355
J 2526
SUB71
SP
P0003
CHIP_CONVEYOR
CHIP_CONVEYOR
N00356
K 2528
F0003.5
MMEM
ACT
SUB24
TMRB
0070
R0613.7
CIONDL
CHIP CONVEYOR INITIAL DLY
L
0000005000
N00357
M 2533
F0003.5
MMEM
A0011.4
2114
G0008.4
*_ESP
R0613.6
CPOFDL
R0613.7
CIONDL
R0613.5
CHIPON
CHIP CONVEYOR ON RELAY
N00358
N 2539
R0613.5
CHIPON
ACT
SUB 3
TMR
0022
R0613.4
CPONDL
CONVEYOR ON DELAY
N00359
O 2543
R0613.4
CPONDL
ACT
SUB 3
TMR
0023
R0613.6
CPOFDL
CONVEYOR OFF DELAY RELAY

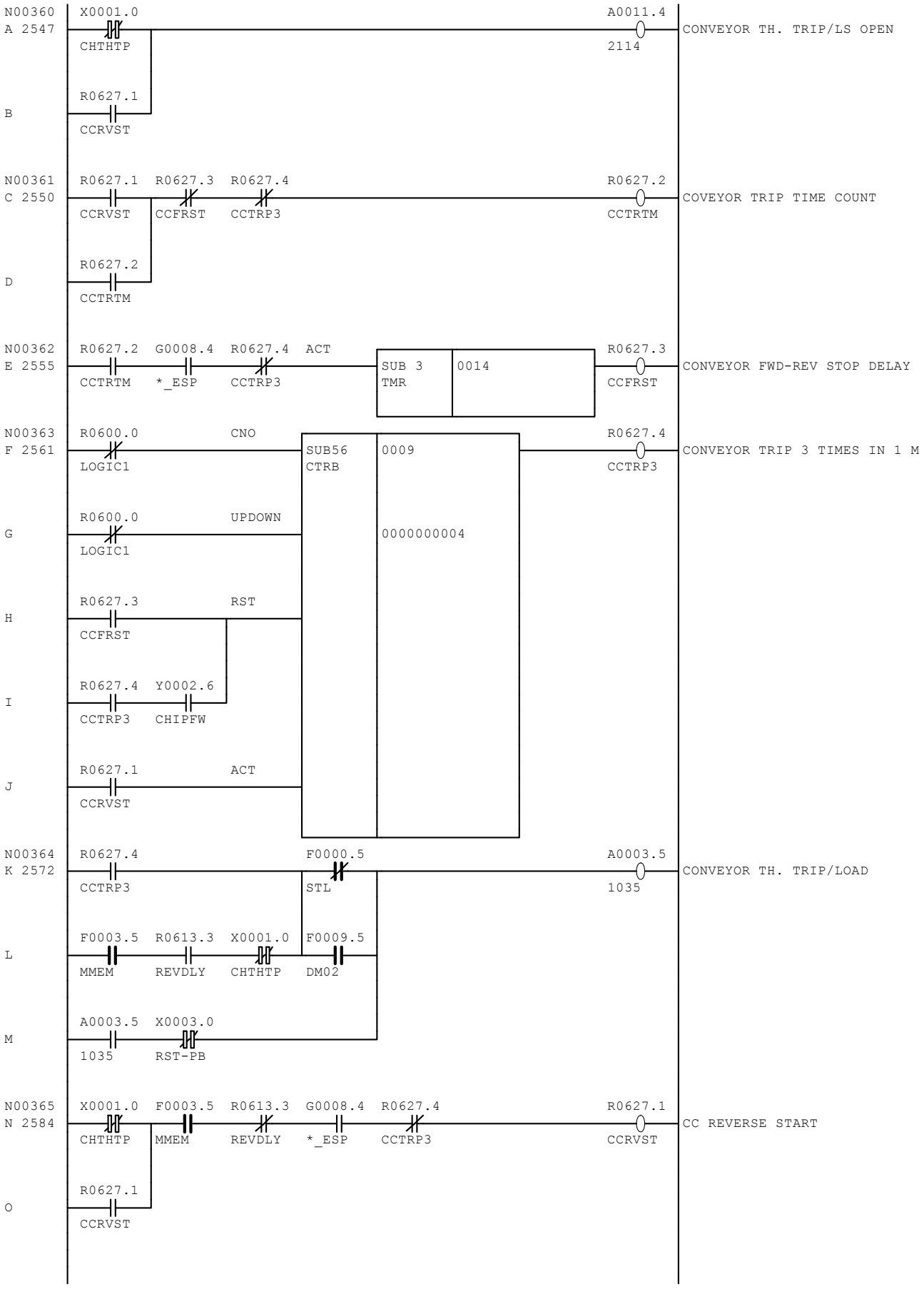
N00360
A 2547
X0001.0
CHTHTP
A0011.4
2114
CONVEYOR TH. TRIP/LS OPEN
R0627.1
B
CCRVST
N00361
C 2550
R0627.1
CCRVST
R0627.3
CCFRST
R0627.4
CCTRP3
R0627.2
CCTRTM
COVEYOR TRIP TIME COUNT
R0627.2
D
CCTRTM
N00362
E 2555
R0627.2
CCTRTM
G0008.4
*_ESP
R0627.4
CCTRP3
ACT
SUB 3
TMR
0014
R0627.3
CCFRST
CONVEYOR FWD-REV STOP DELAY
N00363
F 2561
R0600.0
LOGIC1
CNO
SUB56
CTRB
0009
0000000004
R0627.4
CCTRP3
CONVEYOR TRIP 3 TIMES IN 1 M
R0600.0
G
LOGIC1
UPDOWN
R0627.3
H
CCFRST
RST
R0627.4
CCTRP3
Y0002.6
CHIPFW
I
R0627.1
J
CCRVST
ACT
N00364
K 2572
R0627.4
CCTRP3
F0000.5
STL
A0003.5
1035
CONVEYOR TH. TRIP/LOAD
F0003.5
MMEM
R0613.3
REVDLY
X0001.0
CHTHTP
F0009.5
DM02
L
A0003.5
1035
M
X0003.0
RST-PB
N00365
N 2584
X0001.0
CHTHTP
F0003.5
MMEM
R0613.3
REVDLY
G0008.4
*_ESP
R0627.4
CCTRP3
R0627.1
CCRVST
CC REVERSE START
R0627.1
O
CCRVST

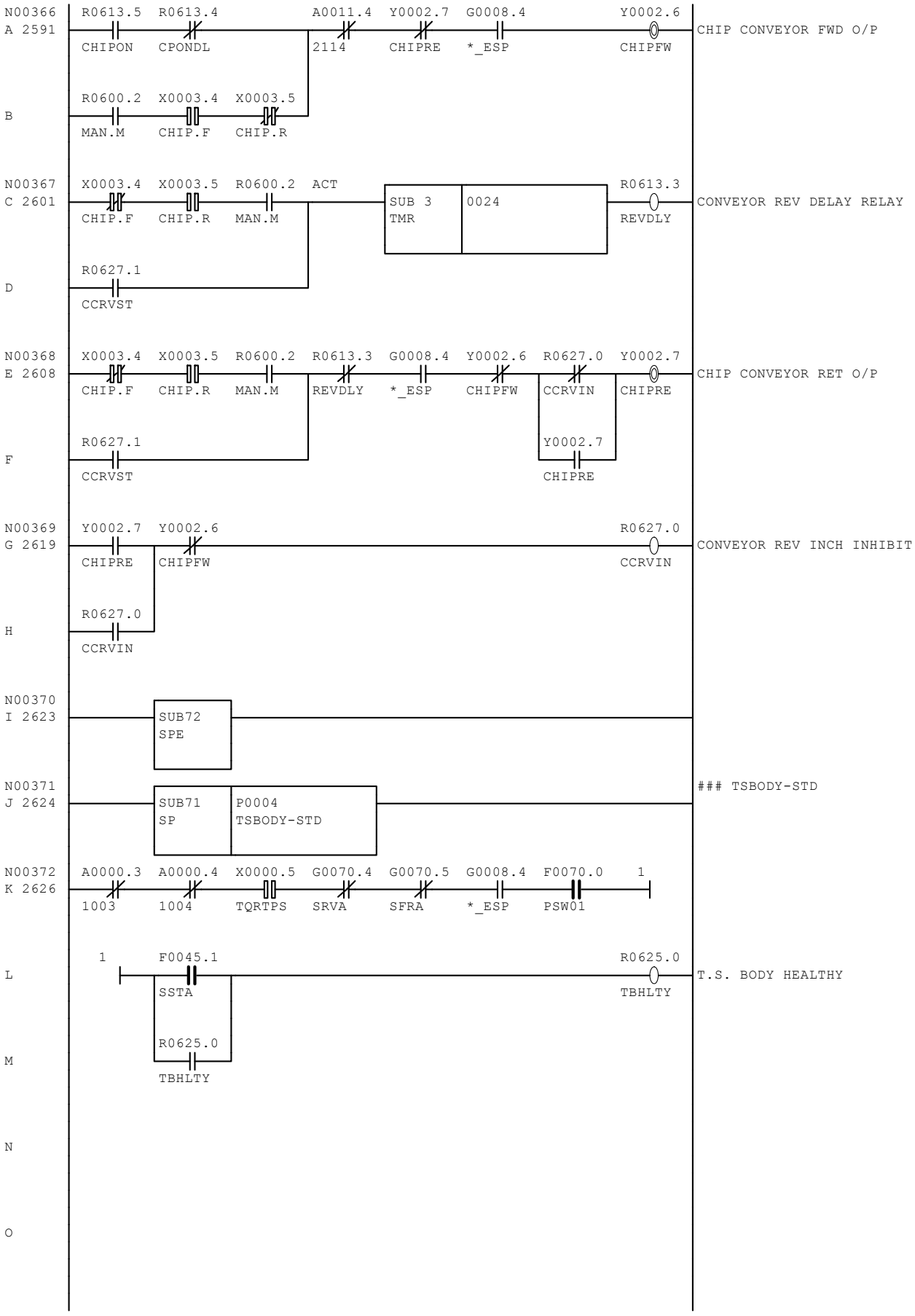
N00366
A 2591
R0613.5
CHIPON
R0613.4
CPONDL
A0011.4
2114
Y0002.7
CHIPRE
G0008.4
*_ESP
Y0002.6
CHIPFW
CHIP CONVEYOR FWD O/P
B
R0600.2
MAN.M
X0003.4
CHIP.F
X0003.5
CHIP.R
N00367
C 2601
X0003.4
CHIP.F
X0003.5
CHIP.R
R0600.2
MAN.M
ACT
SUB 3
TMR
0024
R0613.3
REVDLY
CONVEYOR REV DELAY RELAY
D
R0627.1
CCRVST
N00368
E 2608
X0003.4
CHIP.F
X0003.5
CHIP.R
R0600.2
MAN.M
R0613.3
REVDLY
G0008.4
*_ESP
Y0002.6
CHIPFW
R0627.0
CCRVIN
Y0002.7
CHIPRE
CHIP CONVEYOR RET O/P
F
R0627.1
CCRVST
Y0002.7
CHIPRE
N00369
G 2619
Y0002.7
CHIPRE
Y0002.6
CHIPFW
R0627.0
CCRVIN
CONVEYOR REV INCH INHIBIT
H
R0627.0
CCRVIN
N00370
I 2623
SUB72
SPE
N00371
J 2624
SUB71
SP
P0004
TSBODY-STD
TSBODY-STD
N00372
K 2626
A0000.3
1003
A0000.4
1004
X0000.5
TQRTPS
G0070.4
SRVA
G0070.5
SFRA
G0008.4
*_ESP
F0070.0
PSW01
1
L
1
F0045.1
SSTA
R0625.0
TBHLTY
T.S. BODY HEALTHY
M
R0625.0
TBHLTY
N
O

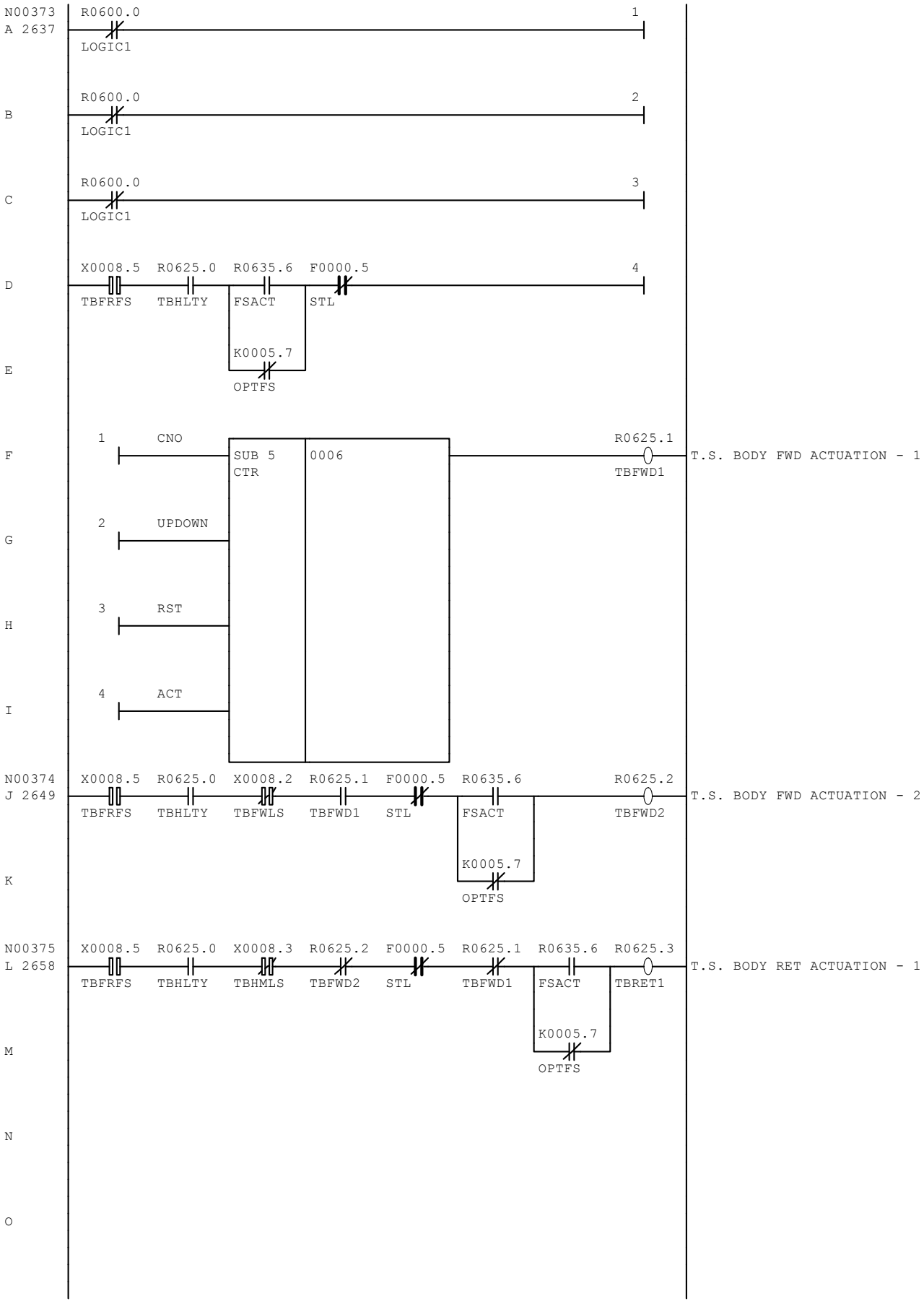
N00373
A 2637
R0600.0
LOGIC1
1
B
R0600.0
LOGIC1
2
C
R0600.0
LOGIC1
3
D
X0008.5
TBFRFS
R0625.0
TBHLTY
R0635.6
FSACT
F0000.5
STL
4
E
K0005.7
OPTFS
F
1
CNO
SUB 5
CTR
0006
R0625.1
TBFWD1
T.S. BODY FWD ACTUATION - 1
G
2
UPDOWN
H
3
RST
I
4
ACT
N00374
J 2649
X0008.5
TBFRFS
R0625.0
TBHLTY
X0008.2
TBFWLS
R0625.1
TBFWD1
F0000.5
STL
R0635.6
FSACT
R0625.2
TBFWD2
T.S. BODY FWD ACTUATION - 2
K
K0005.7
OPTFS
N00375
L 2658
X0008.5
TBFRFS
R0625.0
TBHLTY
X0008.3
TBHMLS
R0625.2
TBFWD2
F0000.5
STL
R0625.1
TBFWD1
R0635.6
FSACT
R0625.3
TBRET1
T.S. BODY RET ACTUATION - 1
M
K0005.7
OPTFS
N
O

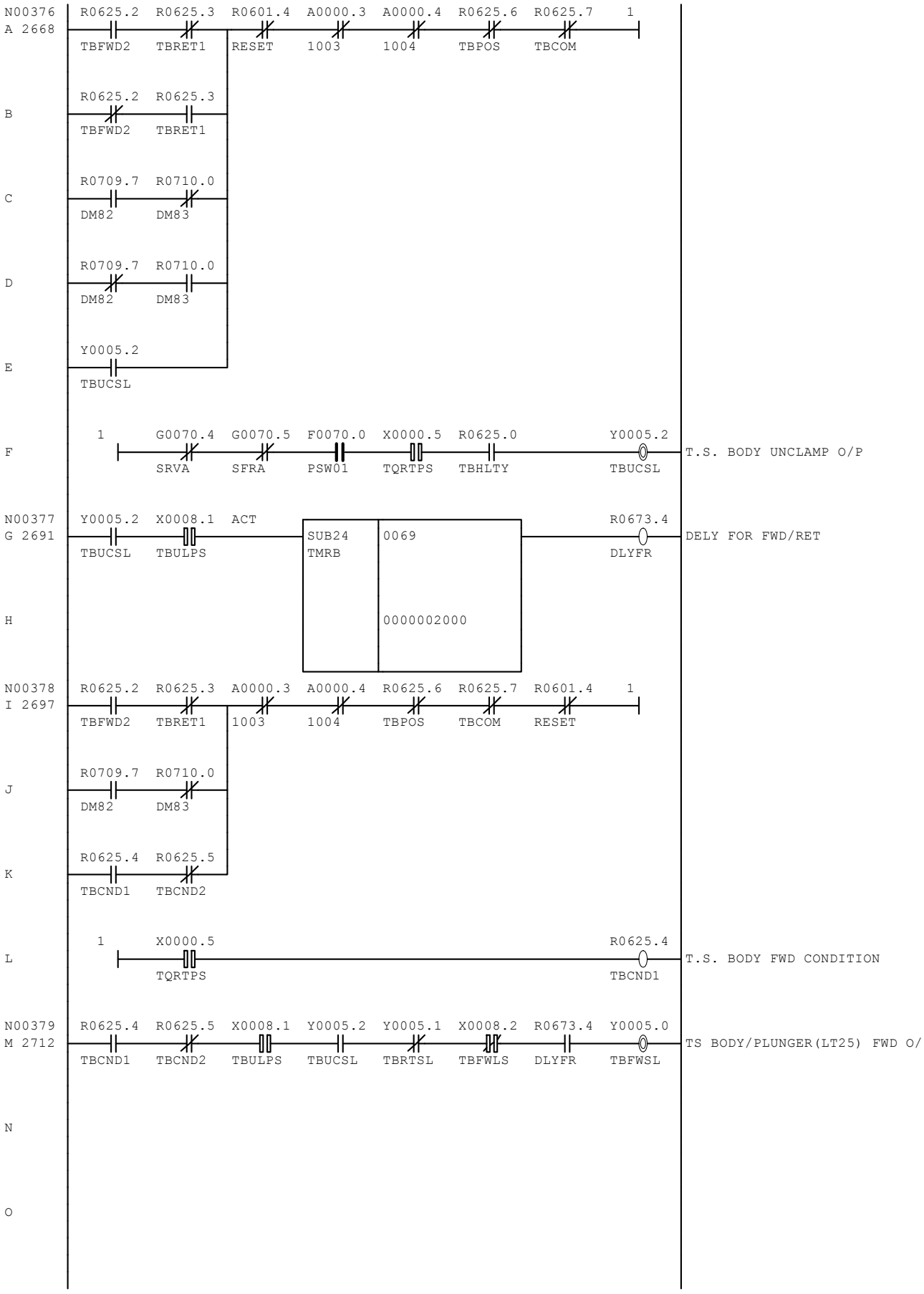
N00376
A 2668
R0625.2 TBFWD2
R0625.3 TBRET1
R0601.4 RESET
A0000.3 1003
A0000.4 1004
R0625.6 TBPOS
R0625.7 TBCOM
1
B
R0625.2 TBFWD2
R0625.3 TBRET1
C
R0709.7 DM82
R0710.0 DM83
D
R0709.7 DM82
R0710.0 DM83
E
Y0005.2 TBUCSL
F
1
G0070.4 SRVA
G0070.5 SFRA
F0070.0 PSW01
X0000.5 TQRTPS
R0625.0 TBHLTY
Y0005.2 TBUCSL
T.S. BODY UNCLAMP O/P
N00377
G 2691
Y0005.2 TBUCSL
X0008.1 TBULPS
ACT SUB24 TMRB
0069
0000002000
R0673.4 DLYFR
DELY FOR FWD/RET
H
N00378
I 2697
R0625.2 TBFWD2
R0625.3 TBRET1
A0000.3 1003
A0000.4 1004
R0625.6 TBPOS
R0625.7 TBCOM
R0601.4 RESET
1
J
R0709.7 DM82
R0710.0 DM83
K
R0625.4 TBCND1
R0625.5 TBCND2
L
1
X0000.5 TQRTPS
R0625.4 TBCND1
T.S. BODY FWD CONDITION
N00379
M 2712
R0625.4 TBCND1
R0625.5 TBCND2
X0008.1 TBULPS
Y0005.2 TBUCSL
Y0005.1 TBRTSL
X0008.2 TBFWLS
R0673.4 DLYFR
Y0005.0 TBFWSL
TS BODY/PLUNGER(LT25) FWD O/
N
O

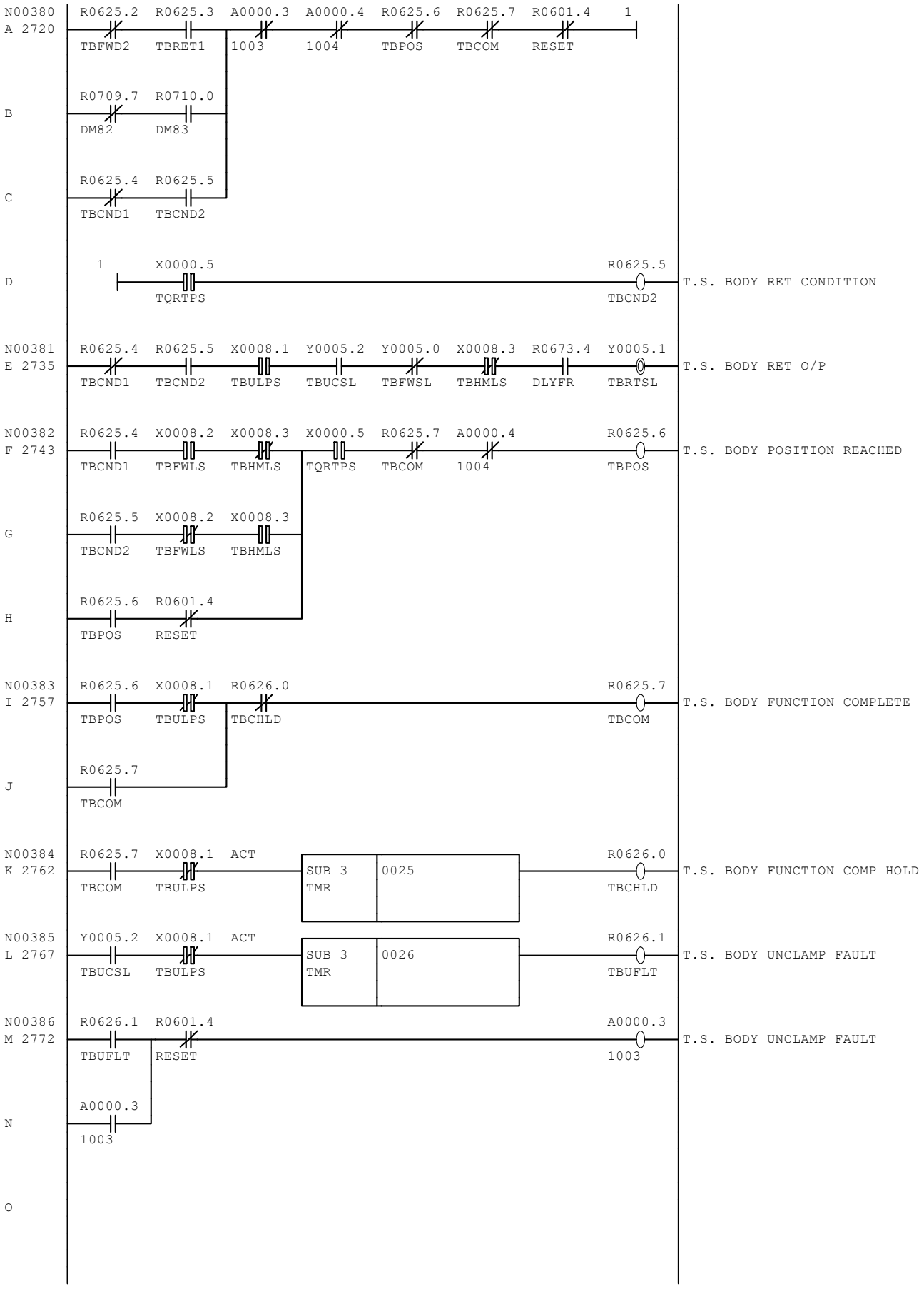
N00380
A 2720
R0625.2 TBFWD2
R0625.3 TBRET1
A0000.3 1003
A0000.4 1004
R0625.6 TBPOS
R0625.7 TBCOM
R0601.4 RESET
1
B
R0709.7 DM82
R0710.0 DM83
C
R0625.4 TBCND1
R0625.5 TBCND2
D
1
X0000.5 TQRTPS
R0625.5 TBCND2
T.S. BODY RET CONDITION
N00381
E 2735
R0625.4 TBCND1
R0625.5 TBCND2
X0008.1 TBULPS
Y0005.2 TBUCSL
Y0005.0 TBFWSL
X0008.3 TBHMLS
R0673.4 DLYFR
Y0005.1 TBRTSL
T.S. BODY RET O/P
N00382
F 2743
R0625.4 TBCND1
X0008.2 TBFWLS
X0008.3 TBHMLS
X0000.5 TQRTPS
R0625.7 TBCOM
A0000.4 1004
R0625.6 TBPOS
T.S. BODY POSITION REACHED
G
R0625.5 TBCND2
X0008.2 TBFWLS
X0008.3 TBHMLS
H
R0625.6 TBPOS
R0601.4 RESET
N00383
I 2757
R0625.6 TBPOS
X0008.1 TBULPS
R0626.0 TBCHLD
R0625.7 TBCOM
T.S. BODY FUNCTION COMPLETE
J
R0625.7 TBCOM
N00384
K 2762
R0625.7 TBCOM
X0008.1 TBULPS
ACT
SUB 3 TMR
0025
R0626.0 TBCHLD
T.S. BODY FUNCTION COMP HOLD
N00385
L 2767
Y0005.2 TBUCSL
X0008.1 TBULPS
ACT
SUB 3 TMR
0026
R0626.1 TBUFLT
T.S. BODY UNCLAMP FAULT
N00386
M 2772
R0626.1 TBUFLT
R0601.4 RESET
A0000.3 1003
T.S. BODY UNCLAMP FAULT
N
A0000.3 1003
O

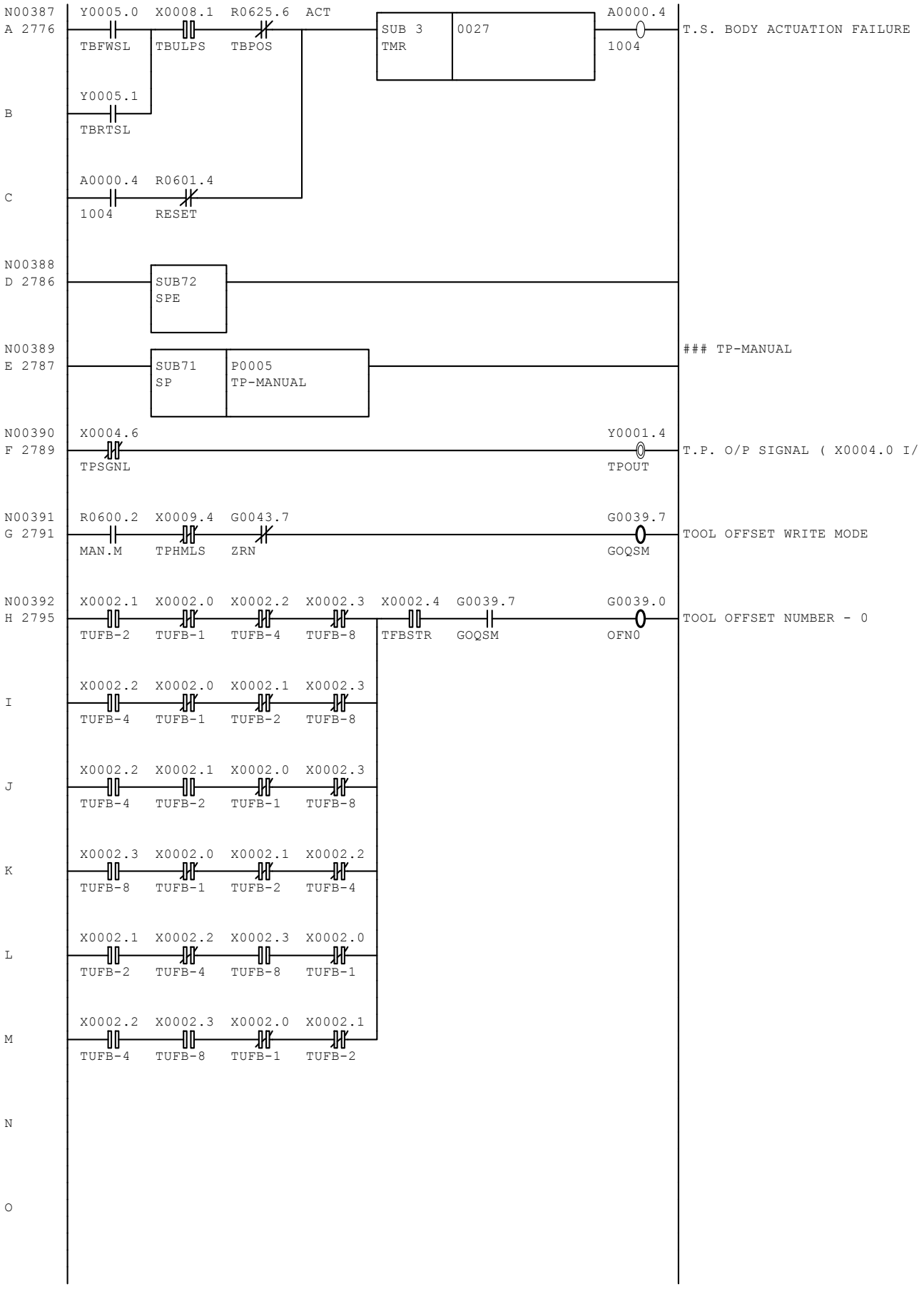
N00387
A 2776
Y0005.0
TBFWSL
X0008.1
TBULPS
R0625.6
TBPOS
ACT
SUB 3
TMR
0027
A0000.4
1004
T.S. BODY ACTUATION FAILURE
B
Y0005.1
TBRTSL
C
A0000.4
1004
R0601.4
RESET
N00388
D 2786
SUB72
SPE
N00389
E 2787
SUB71
SP
P0005
TP-MANUAL
TP-MANUAL
N00390
F 2789
X0004.6
TPSGNL
Y0001.4
TPOUT
T.P. O/P SIGNAL (X0004.0 I/
N00391
G 2791
R0600.2
MAN.M
X0009.4
TPHMLS
G0043.7
ZRN
G0039.7
GOQSM
TOOL OFFSET WRITE MODE
N00392
H 2795
X0002.1
TUFB-2
X0002.0
TUFB-1
X0002.2
TUFB-4
X0002.3
TUFB-8
X0002.4
TFBSTR
G0039.7
GOQSM
G0039.0
OFN0
TOOL OFFSET NUMBER - 0
I
X0002.2
TUFB-4
X0002.0
TUFB-1
X0002.1
TUFB-2
X0002.3
TUFB-8
J
X0002.2
TUFB-4
X0002.1
TUFB-2
X0002.0
TUFB-1
X0002.3
TUFB-8
K
X0002.3
TUFB-8
X0002.0
TUFB-1
X0002.1
TUFB-2
X0002.2
TUFB-4
L
X0002.1
TUFB-2
X0002.2
TUFB-4
X0002.3
TUFB-8
X0002.0
TUFB-1
M
X0002.2
TUFB-4
X0002.3
TUFB-8
X0002.0
TUFB-1
X0002.1
TUFB-2
N
O

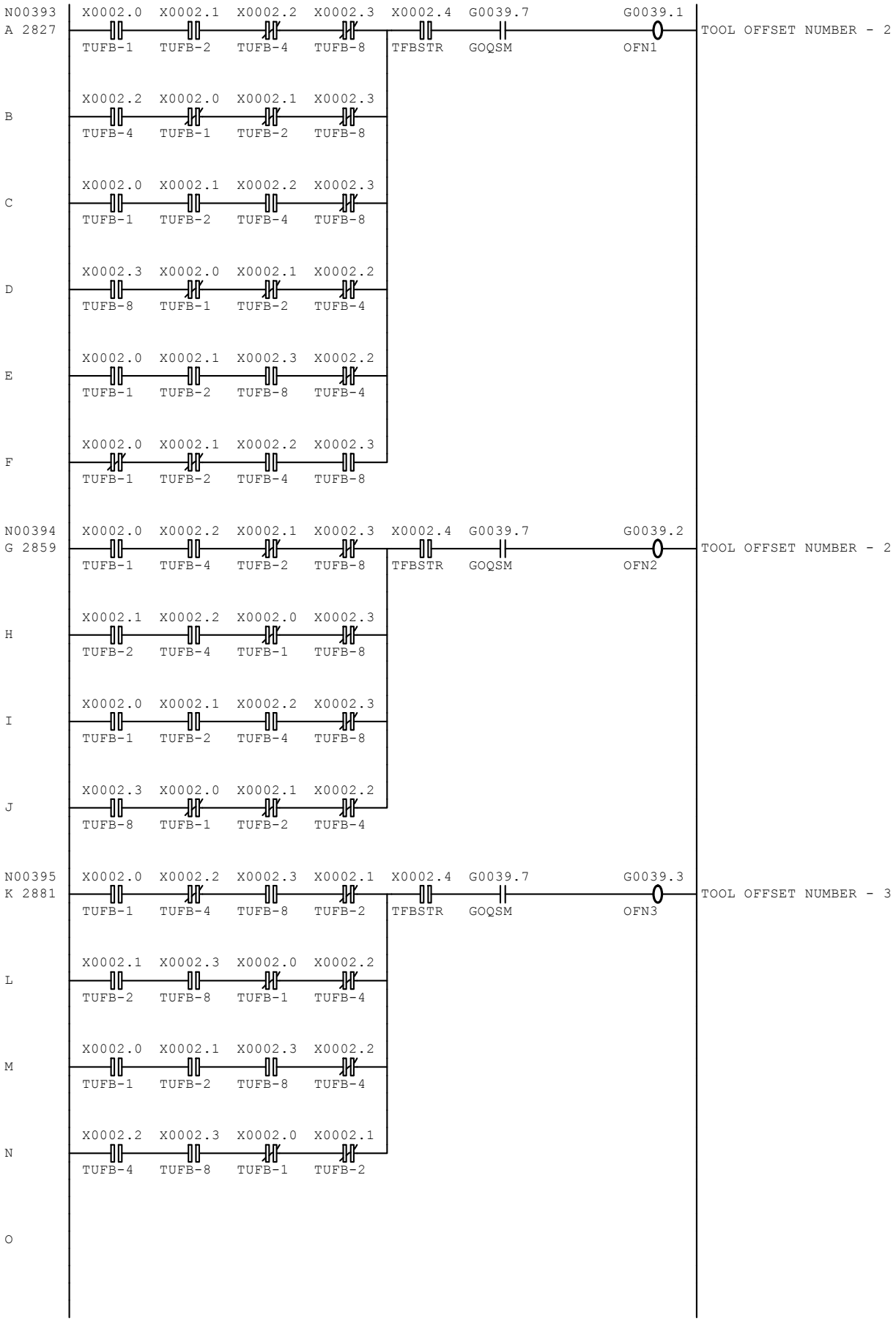
N00393
A 2827
X0002.0 TUFB-1
X0002.1 TUFB-2
X0002.2 TUFB-4
X0002.3 TUFB-8
X0002.4 TFBSTR
G0039.7 GOQSM
G0039.1 OFN1
TOOL OFFSET NUMBER - 2
B
X0002.2 TUFB-4
X0002.0 TUFB-1
X0002.1 TUFB-2
X0002.3 TUFB-8
C
X0002.0 TUFB-1
X0002.1 TUFB-2
X0002.2 TUFB-4
X0002.3 TUFB-8
D
X0002.3 TUFB-8
X0002.0 TUFB-1
X0002.1 TUFB-2
X0002.2 TUFB-4
E
X0002.0 TUFB-1
X0002.1 TUFB-2
X0002.3 TUFB-8
X0002.2 TUFB-4
F
X0002.0 TUFB-1
X0002.1 TUFB-2
X0002.2 TUFB-4
X0002.3 TUFB-8
N00394
G 2859
X0002.0 TUFB-1
X0002.2 TUFB-4
X0002.1 TUFB-2
X0002.3 TUFB-8
X0002.4 TFBSTR
G0039.7 GOQSM
G0039.2 OFN2
TOOL OFFSET NUMBER - 2
H
X0002.1 TUFB-2
X0002.2 TUFB-4
X0002.0 TUFB-1
X0002.3 TUFB-8
I
X0002.0 TUFB-1
X0002.1 TUFB-2
X0002.2 TUFB-4
X0002.3 TUFB-8
J
X0002.3 TUFB-8
X0002.0 TUFB-1
X0002.1 TUFB-2
X0002.2 TUFB-4
N00395
K 2881
X0002.0 TUFB-1
X0002.2 TUFB-4
X0002.3 TUFB-8
X0002.1 TUFB-2
X0002.4 TFBSTR
G0039.7 GOQSM
G0039.3 OFN3
TOOL OFFSET NUMBER - 3
L
X0002.1 TUFB-2
X0002.3 TUFB-8
X0002.0 TUFB-1
X0002.2 TUFB-4
M
X0002.0 TUFB-1
X0002.1 TUFB-2
X0002.3 TUFB-8
X0002.2 TUFB-4
N
X0002.2 TUFB-4
X0002.3 TUFB-8
X0002.0 TUFB-1
X0002.1 TUFB-2
O

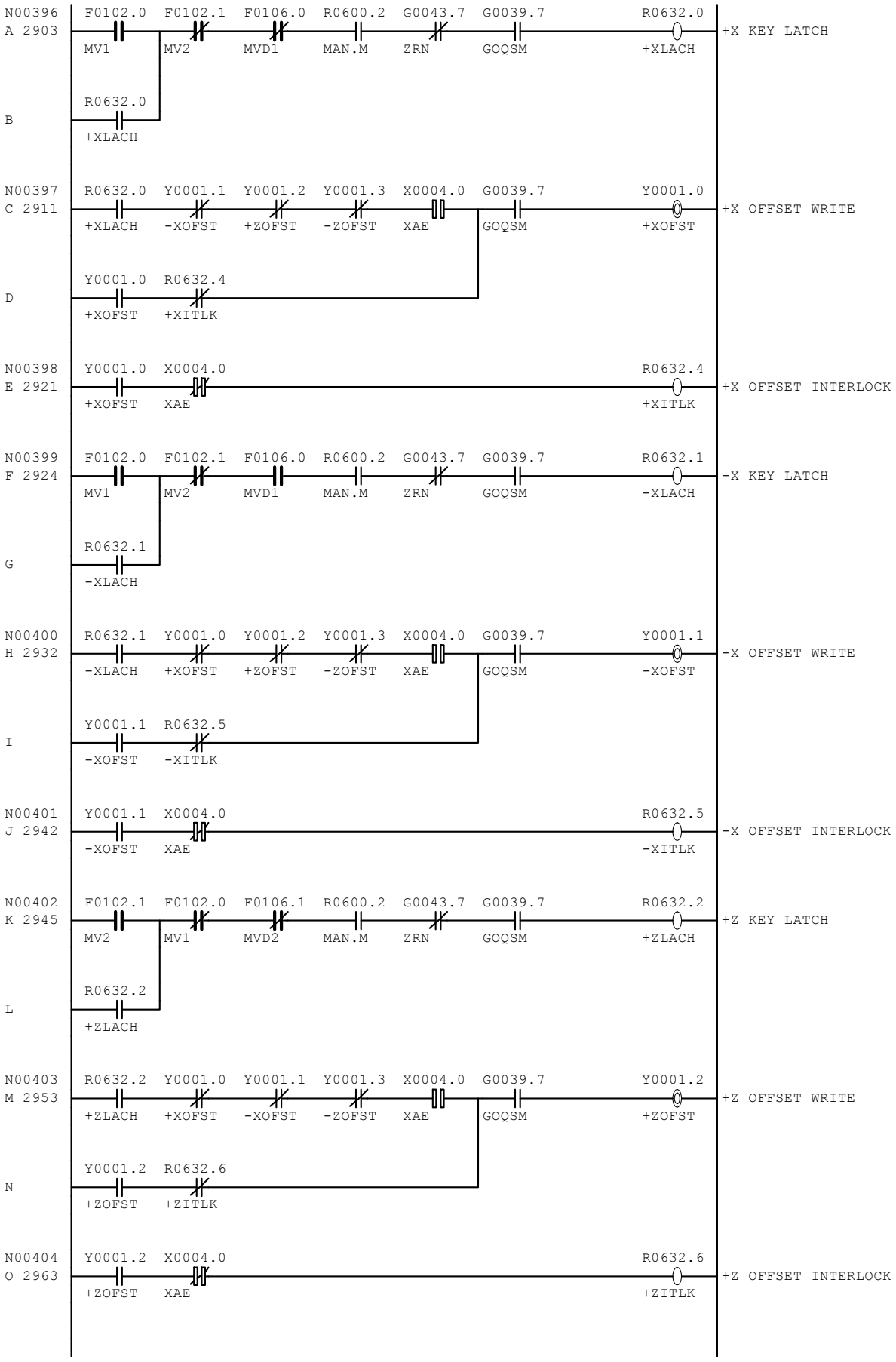
N00396
A 2903
F0102.0 MV1
F0102.1 MV2
F0106.0 MVD1
R0600.2 MAN.M
G0043.7 ZRN
G0039.7 GOQSM
R0632.0 +XLACH
+X KEY LATCH
B
R0632.0 +XLACH
N00397
C 2911
R0632.0 +XLACH
Y0001.1 -XOFST
Y0001.2 +ZOFST
Y0001.3 -ZOFST
X0004.0 XAE
G0039.7 GOQSM
Y0001.0 +XOFST
+X OFFSET WRITE
D
Y0001.0 +XOFST
R0632.4 +XITLK
N00398
E 2921
Y0001.0 +XOFST
X0004.0 XAE
R0632.4 +XITLK
+X OFFSET INTERLOCK
N00399
F 2924
F0102.0 MV1
F0102.1 MV2
F0106.0 MVD1
R0600.2 MAN.M
G0043.7 ZRN
G0039.7 GOQSM
R0632.1 -XLACH
-X KEY LATCH
G
R0632.1 -XLACH
N00400
H 2932
R0632.1 -XLACH
Y0001.0 +XOFST
Y0001.2 +ZOFST
Y0001.3 -ZOFST
X0004.0 XAE
G0039.7 GOQSM
Y0001.1 -XOFST
-X OFFSET WRITE
I
Y0001.1 -XOFST
R0632.5 -XITLK
N00401
J 2942
Y0001.1 -XOFST
X0004.0 XAE
R0632.5 -XITLK
-X OFFSET INTERLOCK
N00402
K 2945
F0102.1 MV2
F0102.0 MV1
F0106.1 MVD2
R0600.2 MAN.M
G0043.7 ZRN
G0039.7 GOQSM
R0632.2 +ZLACH
+Z KEY LATCH
L
R0632.2 +ZLACH
N00403
M 2953
R0632.2 +ZLACH
Y0001.0 +XOFST
Y0001.1 -XOFST
Y0001.3 -ZOFST
X0004.0 XAE
G0039.7 GOQSM
Y0001.2 +ZOFST
+Z OFFSET WRITE
N
Y0001.2 +ZOFST
R0632.6 +ZITLK
N00404
O 2963
Y0001.2 +ZOFST
X0004.0 XAE
R0632.6 +ZITLK
+Z OFFSET INTERLOCK

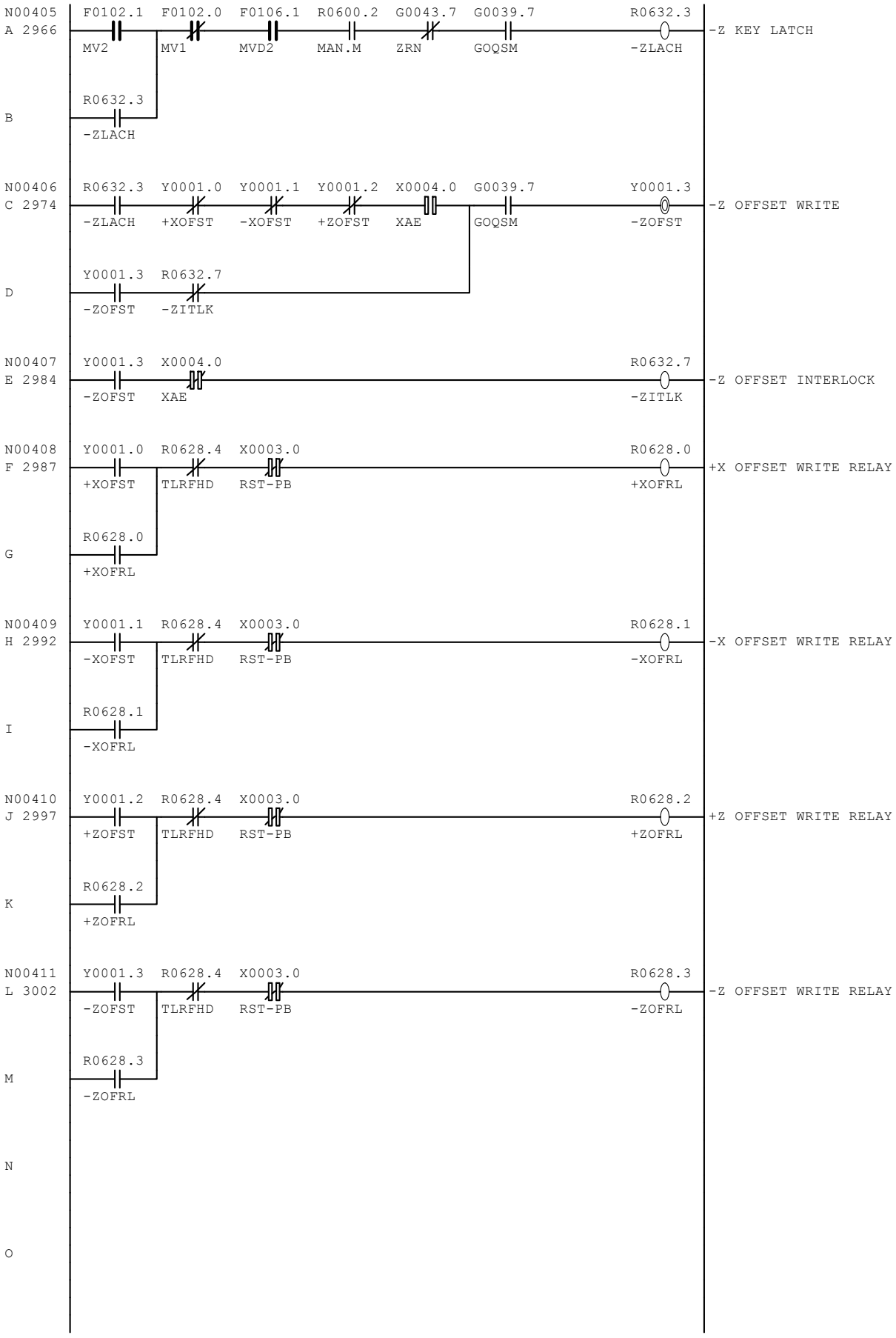
N00405
A 2966
F0102.1
MV2
F0102.0
MV1
F0106.1
MVD2
R0600.2
MAN.M
G0043.7
ZRN
G0039.7
GOQSM
R0632.3
-ZLACH
-Z KEY LATCH
B
R0632.3
-ZLACH
N00406
C 2974
R0632.3
-ZLACH
Y0001.0
+XOFST
Y0001.1
-XOFST
Y0001.2
+ZOFST
X0004.0
XAE
G0039.7
GOQSM
Y0001.3
-ZOFST
-Z OFFSET WRITE
D
Y0001.3
-ZOFST
R0632.7
-ZITLK
N00407
E 2984
Y0001.3
-ZOFST
X0004.0
XAE
R0632.7
-ZITLK
-Z OFFSET INTERLOCK
N00408
F 2987
Y0001.0
+XOFST
R0628.4
TLRFHD
X0003.0
RST-PB
R0628.0
+XOFRL
+X OFFSET WRITE RELAY
G
R0628.0
+XOFRL
N00409
H 2992
Y0001.1
-XOFST
R0628.4
TLRFHD
X0003.0
RST-PB
R0628.1
-XOFRL
-X OFFSET WRITE RELAY
I
R0628.1
-XOFRL
N00410
J 2997
Y0001.2
+ZOFST
R0628.4
TLRFHD
X0003.0
RST-PB
R0628.2
+ZOFRL
+Z OFFSET WRITE RELAY
K
R0628.2
+ZOFRL
N00411
L 3002
Y0001.3
-ZOFST
R0628.4
TLRFHD
X0003.0
RST-PB
R0628.3
-ZOFRL
-Z OFFSET WRITE RELAY
M
R0628.3
-ZOFRL
N
O

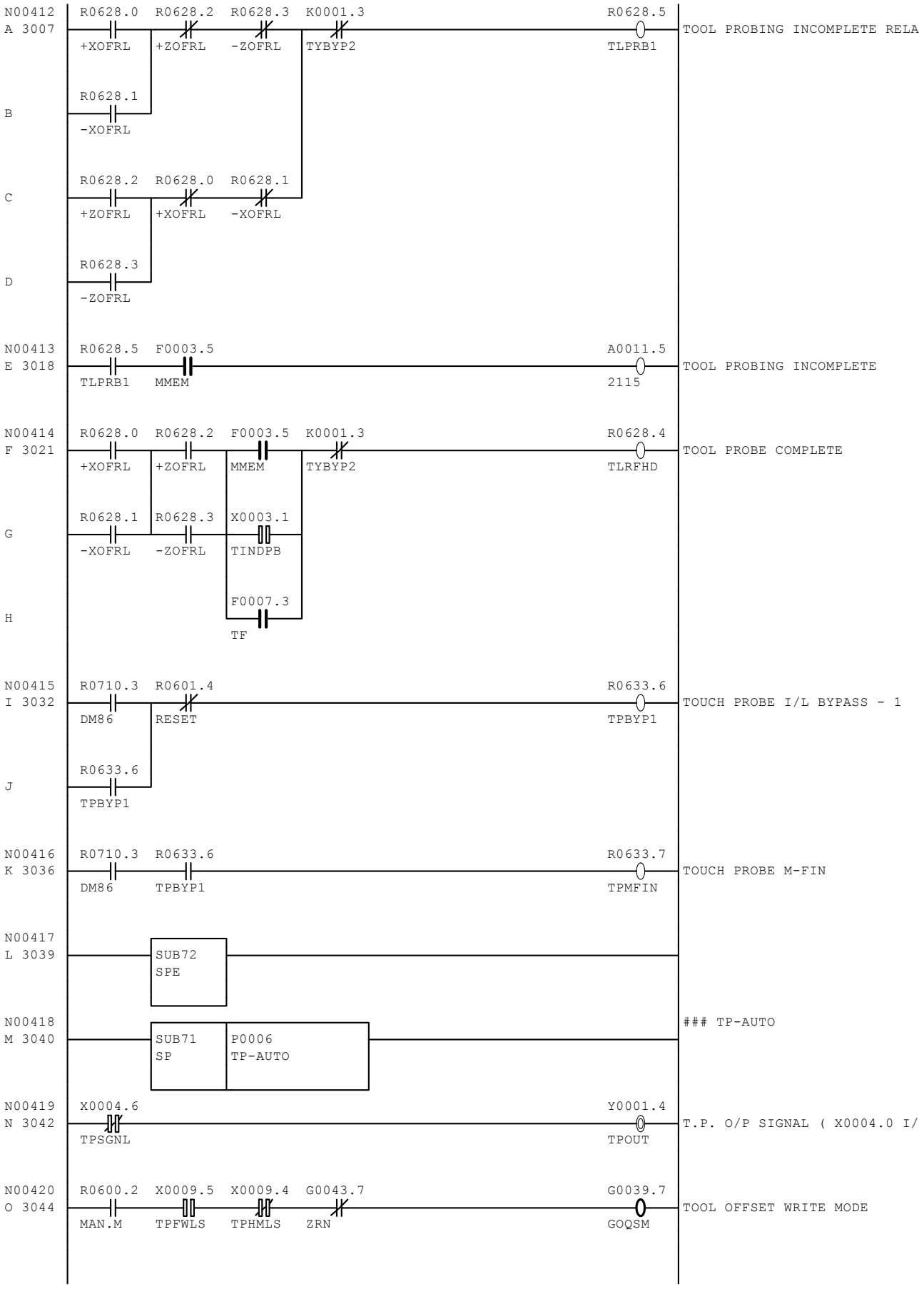
N00412
A 3007
R0628.0
+XOFRL
R0628.2
+ZOFRL
R0628.3
-ZOFRL
K0001.3
TYBYP2
R0628.5
TLPRB1
TOOL PROBING INCOMPLETE RELA
B
R0628.1
-XOFRL
C
R0628.2
+ZOFRL
R0628.0
+XOFRL
R0628.1
-XOFRL
D
R0628.3
-ZOFRL
N00413
E 3018
R0628.5
TLPRB1
F0003.5
MMEM
A0011.5
2115
TOOL PROBING INCOMPLETE
N00414
F 3021
R0628.0
+XOFRL
R0628.2
+ZOFRL
F0003.5
MMEM
K0001.3
TYBYP2
R0628.4
TLRFHD
TOOL PROBE COMPLETE
G
R0628.1
-XOFRL
R0628.3
-ZOFRL
X0003.1
TINDPB
H
F0007.3
TF
N00415
I 3032
R0710.3
DM86
R0601.4
RESET
R0633.6
TPBYP1
TOUCH PROBE I/L BYPASS - 1
J
R0633.6
TPBYP1
N00416
K 3036
R0710.3
DM86
R0633.6
TPBYP1
R0633.7
TPMFIN
TOUCH PROBE M-FIN
N00417
L 3039
SUB72
SPE
N00418
M 3040
SUB71
SP
P0006
TP-AUTO
TP-AUTO
N00419
N 3042
X0004.6
TPSGNL
Y0001.4
TPOUT
T.P. O/P SIGNAL (X0004.0 I/
N00420
O 3044
R0600.2
MAN.M
X0009.5
TPFWLS
X0009.4
TPHMLS
G0043.7
ZRN
G0039.7
GOQSM
TOOL OFFSET WRITE MODE

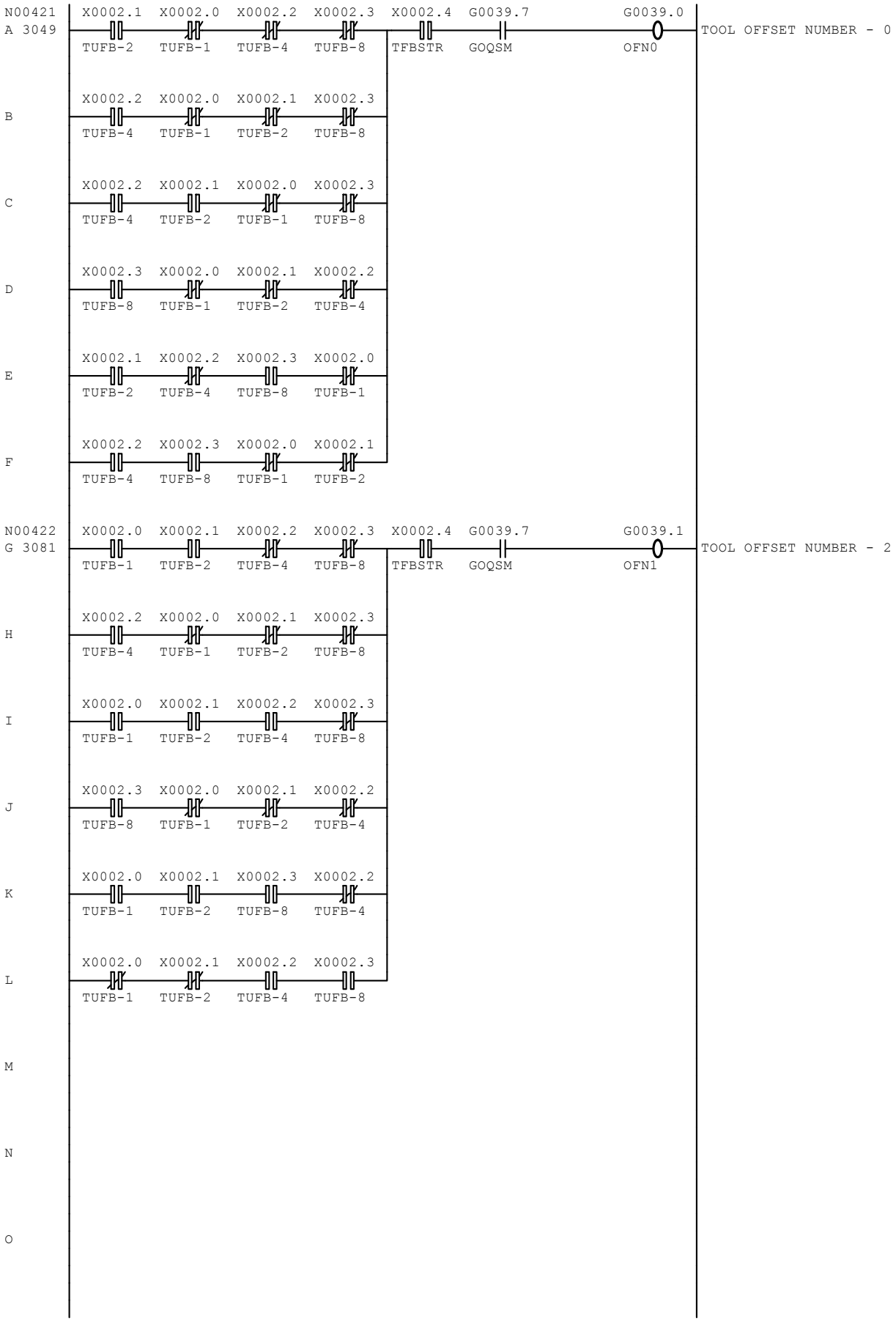
N00421
A 3049
X0002.1 X0002.0 X0002.2 X0002.3 X0002.4 G0039.7 G0039.0
TUFB-2 TUFB-1 TUFB-4 TUFB-8 TFBSTR GOQSM OFN0
TOOL OFFSET NUMBER - 0
B
X0002.2 X0002.0 X0002.1 X0002.3
TUFB-4 TUFB-1 TUFB-2 TUFB-8
C
X0002.2 X0002.1 X0002.0 X0002.3
TUFB-4 TUFB-2 TUFB-1 TUFB-8
D
X0002.3 X0002.0 X0002.1 X0002.2
TUFB-8 TUFB-1 TUFB-2 TUFB-4
E
X0002.1 X0002.2 X0002.3 X0002.0
TUFB-2 TUFB-4 TUFB-8 TUFB-1
F
X0002.2 X0002.3 X0002.0 X0002.1
TUFB-4 TUFB-8 TUFB-1 TUFB-2
N00422
G 3081
X0002.0 X0002.1 X0002.2 X0002.3 X0002.4 G0039.7 G0039.1
TUFB-1 TUFB-2 TUFB-4 TUFB-8 TFBSTR GOQSM OFN1
TOOL OFFSET NUMBER - 2
H
X0002.2 X0002.0 X0002.1 X0002.3
TUFB-4 TUFB-1 TUFB-2 TUFB-8
I
X0002.0 X0002.1 X0002.2 X0002.3
TUFB-1 TUFB-2 TUFB-4 TUFB-8
J
X0002.3 X0002.0 X0002.1 X0002.2
TUFB-8 TUFB-1 TUFB-2 TUFB-4
K
X0002.0 X0002.1 X0002.3 X0002.2
TUFB-1 TUFB-2 TUFB-8 TUFB-4
L
X0002.0 X0002.1 X0002.2 X0002.3
TUFB-1 TUFB-2 TUFB-4 TUFB-8
M
N
O

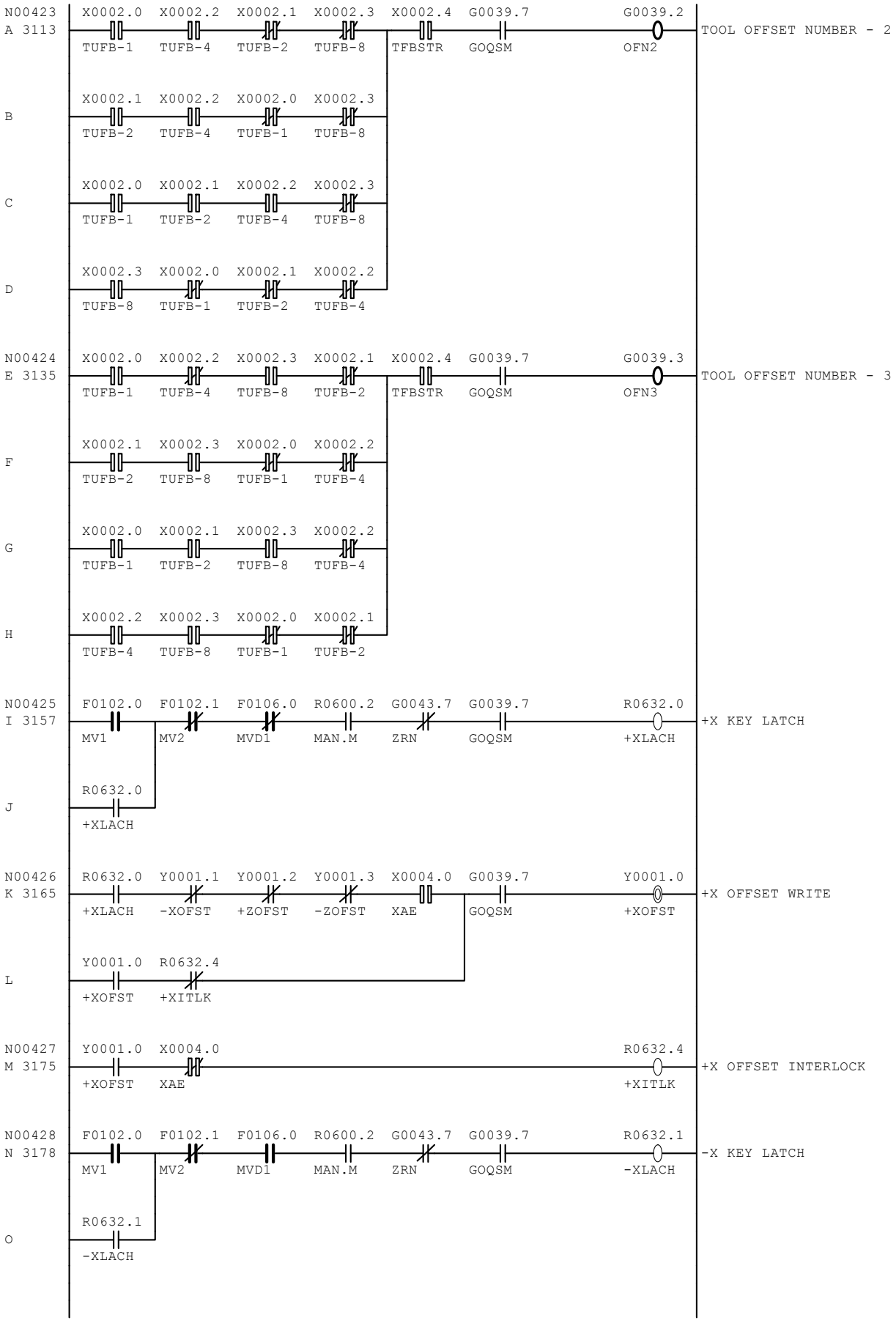
N00423
A 3113
X0002.0 TUFB-1
X0002.2 TUFB-4
X0002.1 TUFB-2
X0002.3 TUFB-8
X0002.4 TFBSTR
G0039.7 GOQSM
G0039.2 OFN2
TOOL OFFSET NUMBER - 2
B
X0002.1 TUFB-2
X0002.2 TUFB-4
X0002.0 TUFB-1
X0002.3 TUFB-8
C
X0002.0 TUFB-1
X0002.1 TUFB-2
X0002.2 TUFB-4
X0002.3 TUFB-8
D
X0002.3 TUFB-8
X0002.0 TUFB-1
X0002.1 TUFB-2
X0002.2 TUFB-4
N00424
E 3135
X0002.0 TUFB-1
X0002.2 TUFB-4
X0002.3 TUFB-8
X0002.1 TUFB-2
X0002.4 TFBSTR
G0039.7 GOQSM
G0039.3 OFN3
TOOL OFFSET NUMBER - 3
F
X0002.1 TUFB-2
X0002.3 TUFB-8
X0002.0 TUFB-1
X0002.2 TUFB-4
G
X0002.0 TUFB-1
X0002.1 TUFB-2
X0002.3 TUFB-8
X0002.2 TUFB-4
H
X0002.2 TUFB-4
X0002.3 TUFB-8
X0002.0 TUFB-1
X0002.1 TUFB-2
N00425
I 3157
F0102.0 MV1
F0102.1 MV2
F0106.0 MVD1
R0600.2 MAN.M
G0043.7 ZRN
G0039.7 GOQSM
R0632.0 +XLACH
+X KEY LATCH
J
R0632.0 +XLACH
N00426
K 3165
R0632.0 +XLACH
Y0001.1 -XOFST
Y0001.2 +ZOFST
Y0001.3 -ZOFST
X0004.0 XAE
G0039.7 GOQSM
Y0001.0 +XOFST
+X OFFSET WRITE
L
Y0001.0 +XOFST
R0632.4 +XITLK
N00427
M 3175
Y0001.0 +XOFST
X0004.0 XAE
R0632.4 +XITLK
+X OFFSET INTERLOCK
N00428
N 3178
F0102.0 MV1
F0102.1 MV2
F0106.0 MVD1
R0600.2 MAN.M
G0043.7 ZRN
G0039.7 GOQSM
R0632.1 -XLACH
-X KEY LATCH
O
R0632.1 -XLACH

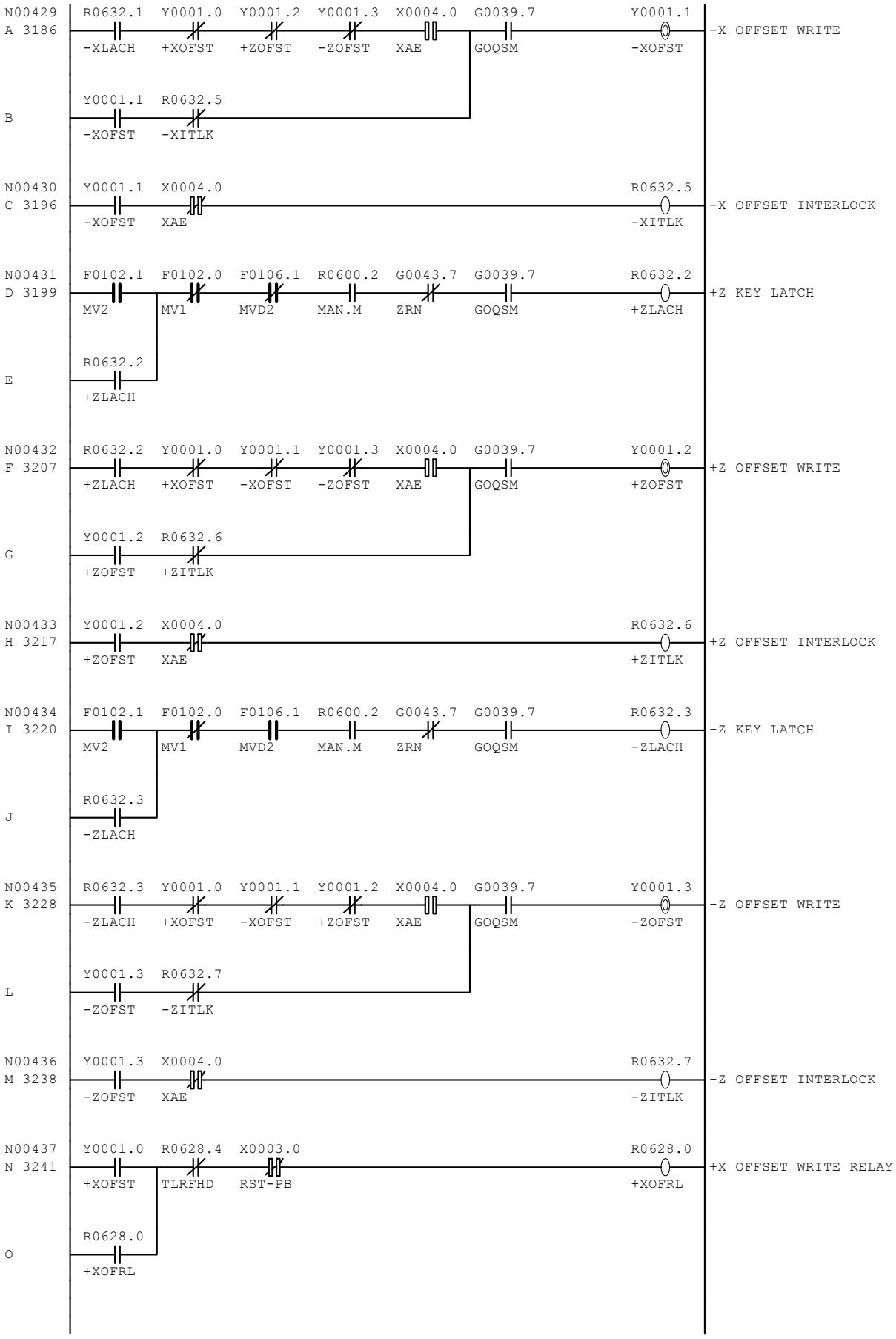
N00429
A 3186
R0632.1 -XLACH
Y0001.0 +XOFST
Y0001.2 +ZOFST
Y0001.3 -ZOFST
X0004.0 XAE
G0039.7 GOQSM
Y0001.1 -XOFST
-X OFFSET WRITE
B
Y0001.1 -XOFST
R0632.5 -XITLK
N00430
C 3196
Y0001.1 -XOFST
X0004.0 XAE
R0632.5 -XITLK
-X OFFSET INTERLOCK
N00431
D 3199
F0102.1 MV2
F0102.0 MV1
F0106.1 MVD2
R0600.2 MAN.M
G0043.7 ZRN
G0039.7 GOQSM
R0632.2 +ZLACH
+Z KEY LATCH
E
R0632.2 +ZLACH
N00432
F 3207
R0632.2 +ZLACH
Y0001.0 +XOFST
Y0001.1 -XOFST
Y0001.3 -ZOFST
X0004.0 XAE
G0039.7 GOQSM
Y0001.2 +ZOFST
+Z OFFSET WRITE
G
Y0001.2 +ZOFST
R0632.6 +ZITLK
N00433
H 3217
Y0001.2 +ZOFST
X0004.0 XAE
R0632.6 +ZITLK
+Z OFFSET INTERLOCK
N00434
I 3220
F0102.1 MV2
F0102.0 MV1
F0106.1 MVD2
R0600.2 MAN.M
G0043.7 ZRN
G0039.7 GOQSM
R0632.3 -ZLACH
-Z KEY LATCH
J
R0632.3 -ZLACH
N00435
K 3228
R0632.3 -ZLACH
Y0001.0 +XOFST
Y0001.1 -XOFST
Y0001.2 +ZOFST
X0004.0 XAE
G0039.7 GOQSM
Y0001.3 -ZOFST
-Z OFFSET WRITE
L
Y0001.3 -ZOFST
R0632.7 -ZITLK
N00436
M 3238
Y0001.3 -ZOFST
X0004.0 XAE
R0632.7 -ZITLK
-Z OFFSET INTERLOCK
N00437
N 3241
Y0001.0 +XOFST
R0628.4 TLRFHD
X0003.0 RST-PB
R0628.0 +XOFRL
+X OFFSET WRITE RELAY
O
R0628.0 +XOFRL

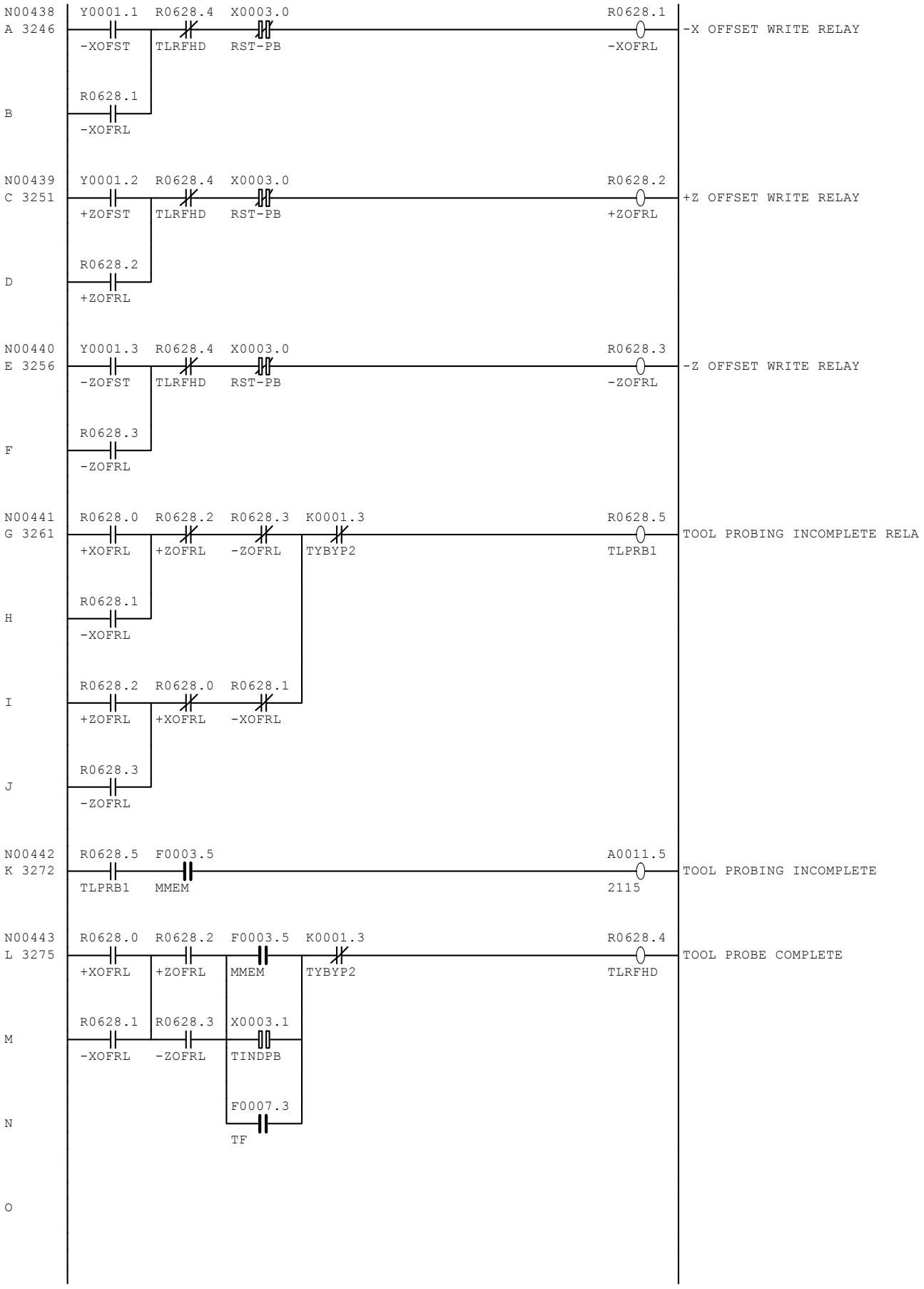
N00438
A 3246
Y0001.1
-XOFST
R0628.4
TLRFHD
X0003.0
RST-PB
R0628.1
-XOFRL
-X OFFSET WRITE RELAY
B
R0628.1
-XOFRL
N00439
C 3251
Y0001.2
+ZOFST
R0628.4
TLRFHD
X0003.0
RST-PB
R0628.2
+ZOFRL
+Z OFFSET WRITE RELAY
D
R0628.2
+ZOFRL
N00440
E 3256
Y0001.3
-ZOFST
R0628.4
TLRFHD
X0003.0
RST-PB
R0628.3
-ZOFRL
-Z OFFSET WRITE RELAY
F
R0628.3
-ZOFRL
N00441
G 3261
R0628.0
+XOFRL
R0628.2
+ZOFRL
R0628.3
-ZOFRL
K0001.3
TYBYP2
R0628.5
TLPRB1
TOOL PROBING INCOMPLETE RELA
H
R0628.1
-XOFRL
I
R0628.2
+ZOFRL
R0628.0
+XOFRL
R0628.1
-XOFRL
J
R0628.3
-ZOFRL
N00442
K 3272
R0628.5
TLPRB1
F0003.5
MMEM
A0011.5
2115
TOOL PROBING INCOMPLETE
N00443
L 3275
R0628.0
+XOFRL
R0628.2
+ZOFRL
F0003.5
MMEM
K0001.3
TYBYP2
R0628.4
TLRFHD
TOOL PROBE COMPLETE
M
R0628.1
-XOFRL
R0628.3
-ZOFRL
X0003.1
TINDPB
N
F0007.3
TF
O

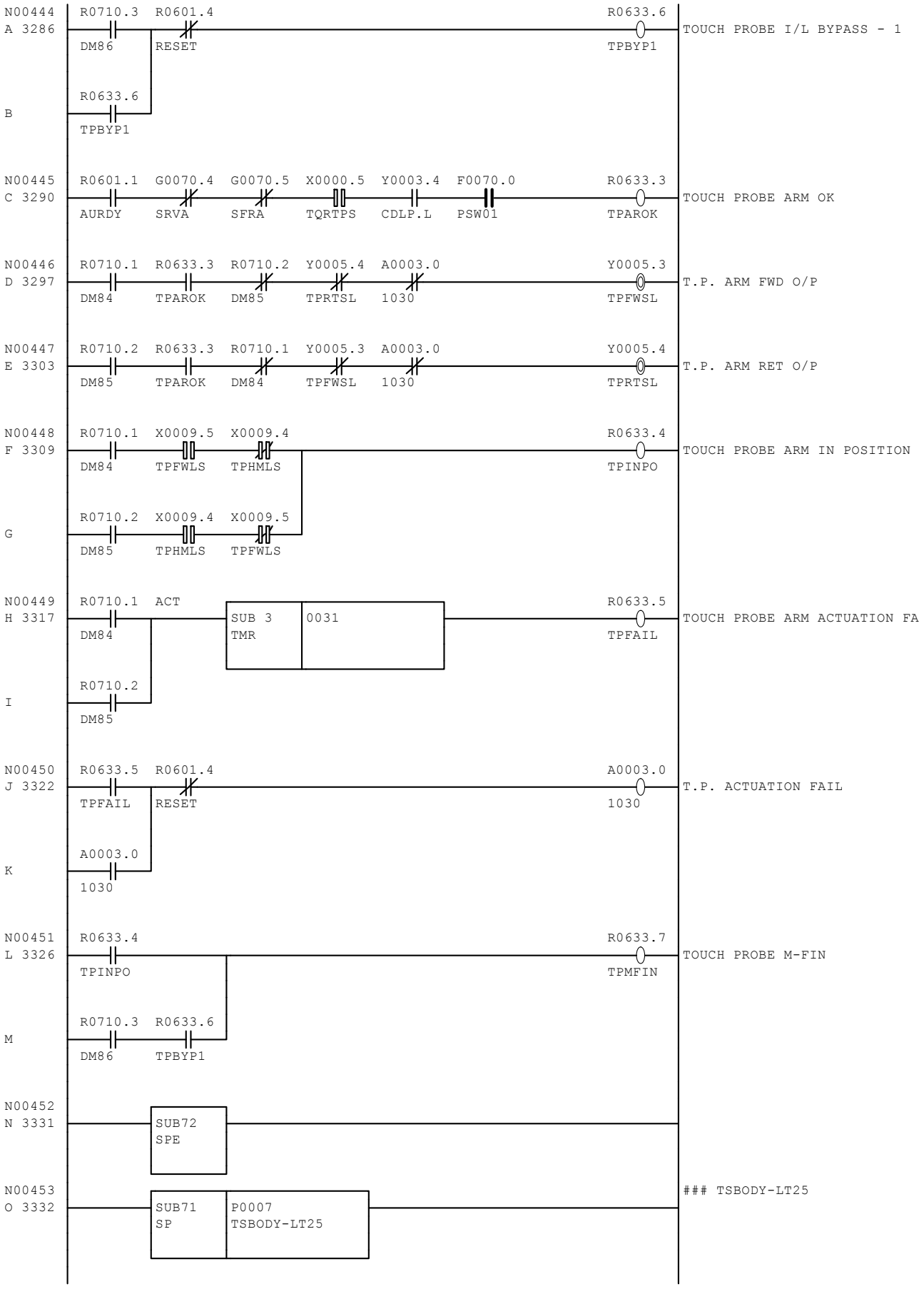
N00444
A 3286
R0710.3
DM86
R0601.4
RESET
R0633.6
TPBYP1
TOUCH PROBE I/L BYPASS - 1
B
R0633.6
TPBYP1
N00445
C 3290
R0601.1
AURDY
G0070.4
SRVA
G0070.5
SFRA
X0000.5
TQRTPS
Y0003.4
CDLP.L
F0070.0
PSW01
R0633.3
TPAROK
TOUCH PROBE ARM OK
N00446
D 3297
R0710.1
DM84
R0633.3
TPAROK
R0710.2
DM85
Y0005.4
TPRTSL
A0003.0
1030
Y0005.3
TPFWSL
T.P. ARM FWD O/P
N00447
E 3303
R0710.2
DM85
R0633.3
TPAROK
R0710.1
DM84
Y0005.3
TPFWSL
A0003.0
1030
Y0005.4
TPRTSL
T.P. ARM RET O/P
N00448
F 3309
R0710.1
DM84
X0009.5
TPFWLS
X0009.4
TPHMLS
R0633.4
TPINPO
TOUCH PROBE ARM IN POSITION
G
R0710.2
DM85
X0009.4
TPHMLS
X0009.5
TPFWLS
N00449
H 3317
R0710.1
DM84
ACT
SUB 3
TMR
0031
R0633.5
TPFAIL
TOUCH PROBE ARM ACTUATION FA
I
R0710.2
DM85
N00450
J 3322
R0633.5
TPFAIL
R0601.4
RESET
A0003.0
1030
T.P. ACTUATION FAIL
K
A0003.0
1030
N00451
L 3326
R0633.4
TPINPO
R0633.7
TPMFIN
TOUCH PROBE M-FIN
M
R0710.3
DM86
R0633.6
TPBYP1
N00452
N 3331
SUB72
SPE
N00453
O 3332
SUB71
SP
P0007
TSBODY-LT25
TSBODY-LT25

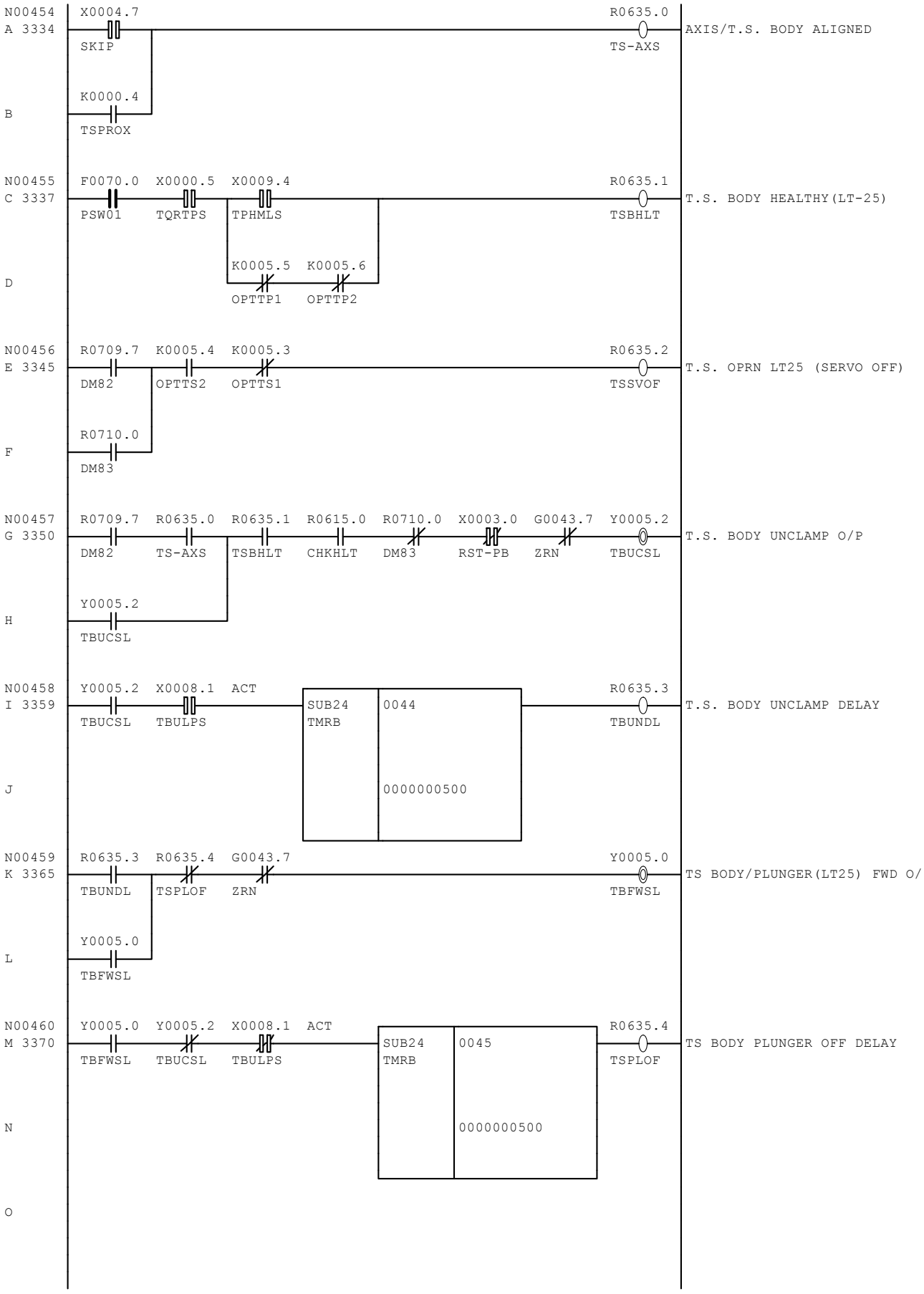
N00454
A 3334
X0004.7
SKIP
R0635.0
TS-AXS
AXIS/T.S. BODY ALIGNED
K0000.4
TSPROX
B
N00455
C 3337
F0070.0
PSW01
X0000.5
TQRTPS
X0009.4
TPHMLS
R0635.1
TSBHLT
T.S. BODY HEALTHY(LT-25)
K0005.5
OPTTP1
K0005.6
OPTTP2
D
N00456
E 3345
R0709.7
DM82
K0005.4
OPTTS2
K0005.3
OPTTS1
R0635.2
TSSVOF
T.S. OPRN LT25 (SERVO OFF)
R0710.0
DM83
F
N00457
G 3350
R0709.7
DM82
R0635.0
TS-AXS
R0635.1
TSBHLT
R0615.0
CHKHLT
R0710.0
DM83
X0003.0
RST-PB
G0043.7
ZRN
Y0005.2
TBUCSL
T.S. BODY UNCLAMP O/P
Y0005.2
TBUCSL
H
N00458
I 3359
Y0005.2
TBUCSL
X0008.1
TBULPS
ACT
SUB24
TMRB
0044
0000000500
R0635.3
TBUNDL
T.S. BODY UNCLAMP DELAY
J
N00459
K 3365
R0635.3
TBUNDL
R0635.4
TSPLOF
G0043.7
ZRN
Y0005.0
TBFWSL
TS BODY/PLUNGER(LT25) FWD O/
Y0005.0
TBFWSL
L
N00460
M 3370
Y0005.0
TBFWSL
Y0005.2
TBUCSL
X0008.1
TBULPS
ACT
SUB24
TMRB
0045
0000000500
R0635.4
TSPLOF
TS BODY PLUNGER OFF DELAY
N
O

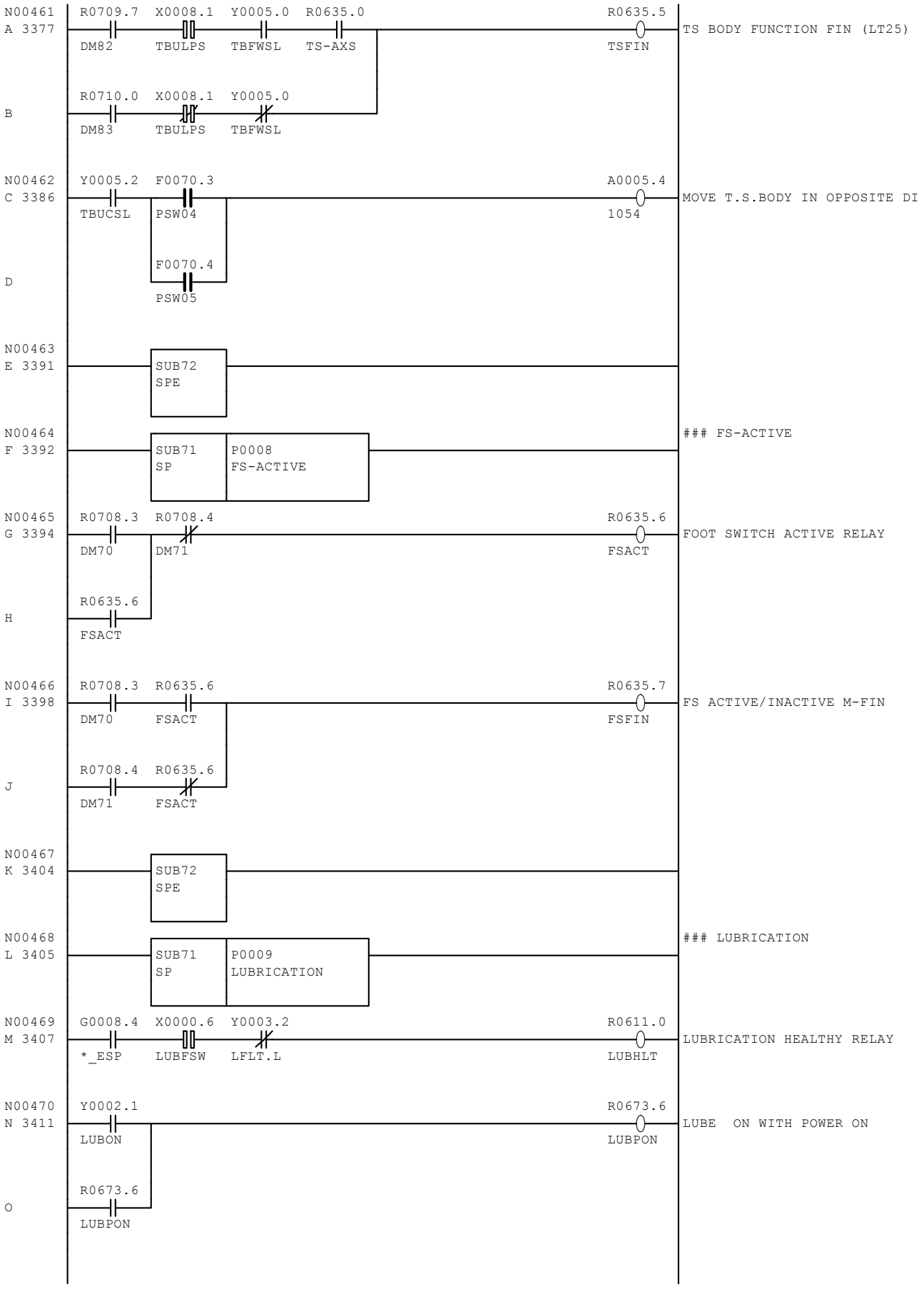
N00461
A 3377
R0709.7
DM82
X0008.1
TBULPS
Y0005.0
TBFWSL
R0635.0
TS-AXS
R0635.5
TSFIN
TS BODY FUNCTION FIN (LT25)
B
R0710.0
DM83
X0008.1
TBULPS
Y0005.0
TBFWSL
N00462
C 3386
Y0005.2
TBUCSL
F0070.3
PSW04
A0005.4
1054
MOVE T.S.BODY IN OPPOSITE DI
D
F0070.4
PSW05
N00463
E 3391
SUB72
SPE
N00464
F 3392
SUB71
SP
P0008
FS-ACTIVE
FS-ACTIVE
N00465
G 3394
R0708.3
DM70
R0708.4
DM71
R0635.6
FSACT
FOOT SWITCH ACTIVE RELAY
H
R0635.6
FSACT
N00466
I 3398
R0708.3
DM70
R0635.6
FSACT
R0635.7
FSFIN
FS ACTIVE/INACTIVE M-FIN
J
R0708.4
DM71
R0635.6
FSACT
N00467
K 3404
SUB72
SPE
N00468
L 3405
SUB71
SP
P0009
LUBRICATION
LUBRICATION
N00469
M 3407
G0008.4
*_ESP
X0000.6
LUBFSW
Y0003.2
LFLT.L
R0611.0
LUBHLT
LUBRICATION HEALTHY RELAY
N00470
N 3411
Y0002.1
LUBON
R0673.6
LUBPON
LUBE ON WITH POWER ON
O
R0673.6
LUBPON

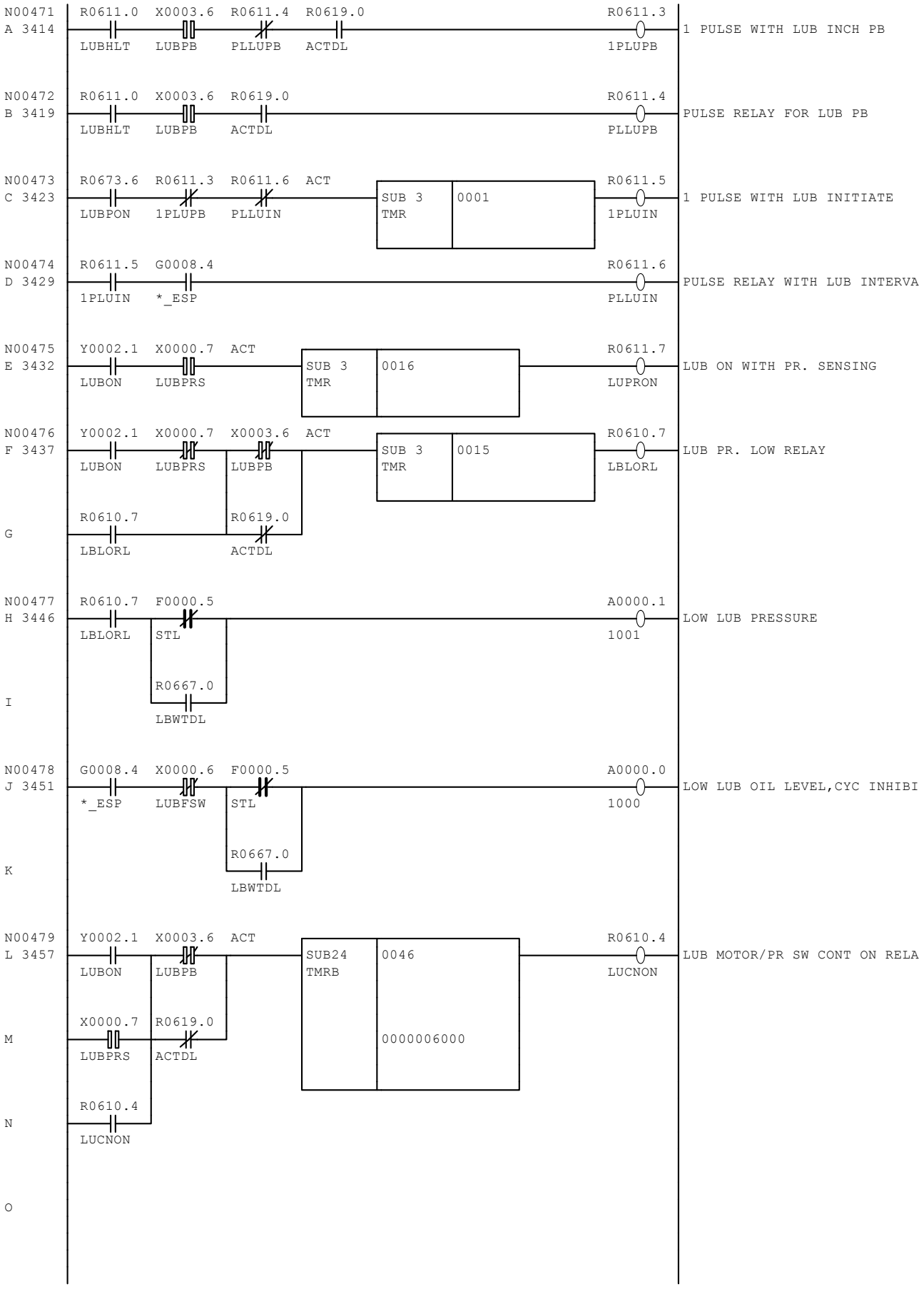
N00471
A 3414
R0611.0
LUBHLT
X0003.6
LUBPB
R0611.4
PLLUPB
R0619.0
ACTDL
R0611.3
1PLUPB
1 PULSE WITH LUB INCH PB
N00472
B 3419
R0611.0
LUBHLT
X0003.6
LUBPB
R0619.0
ACTDL
R0611.4
PLLUPB
PULSE RELAY FOR LUB PB
N00473
C 3423
R0673.6
LUBPON
R0611.3
1PLUPB
R0611.6
PLLUIN
ACT
SUB 3
TMR
0001
R0611.5
1PLUIN
1 PULSE WITH LUB INITIATE
N00474
D 3429
R0611.5
1PLUIN
G0008.4
*_ESP
R0611.6
PLLUIN
PULSE RELAY WITH LUB INTERVA
N00475
E 3432
Y0002.1
LUBON
X0000.7
LUBPRS
ACT
SUB 3
TMR
0016
R0611.7
LUPRON
LUB ON WITH PR. SENSING
N00476
F 3437
Y0002.1
LUBON
X0000.7
LUBPRS
X0003.6
LUBPB
ACT
SUB 3
TMR
0015
R0610.7
LBLORL
LUB PR. LOW RELAY
G
R0610.7
LBLORL
R0619.0
ACTDL
N00477
H 3446
R0610.7
LBLORL
F0000.5
STL
A0000.1
1001
LOW LUB PRESSURE
I
R0667.0
LBWTDL
N00478
J 3451
G0008.4
*_ESP
X0000.6
LUBFSW
F0000.5
STL
A0000.0
1000
LOW LUB OIL LEVEL,CYC INHIBI
K
R0667.0
LBWTDL
N00479
L 3457
Y0002.1
LUBON
X0003.6
LUBPB
ACT
SUB24
TMRB
0046
0000006000
R0610.4
LUCNON
LUB MOTOR/PR SW CONT ON RELA
M
X0000.7
LUBPRS
R0619.0
ACTDL
N
R0610.4
LUCNON
O

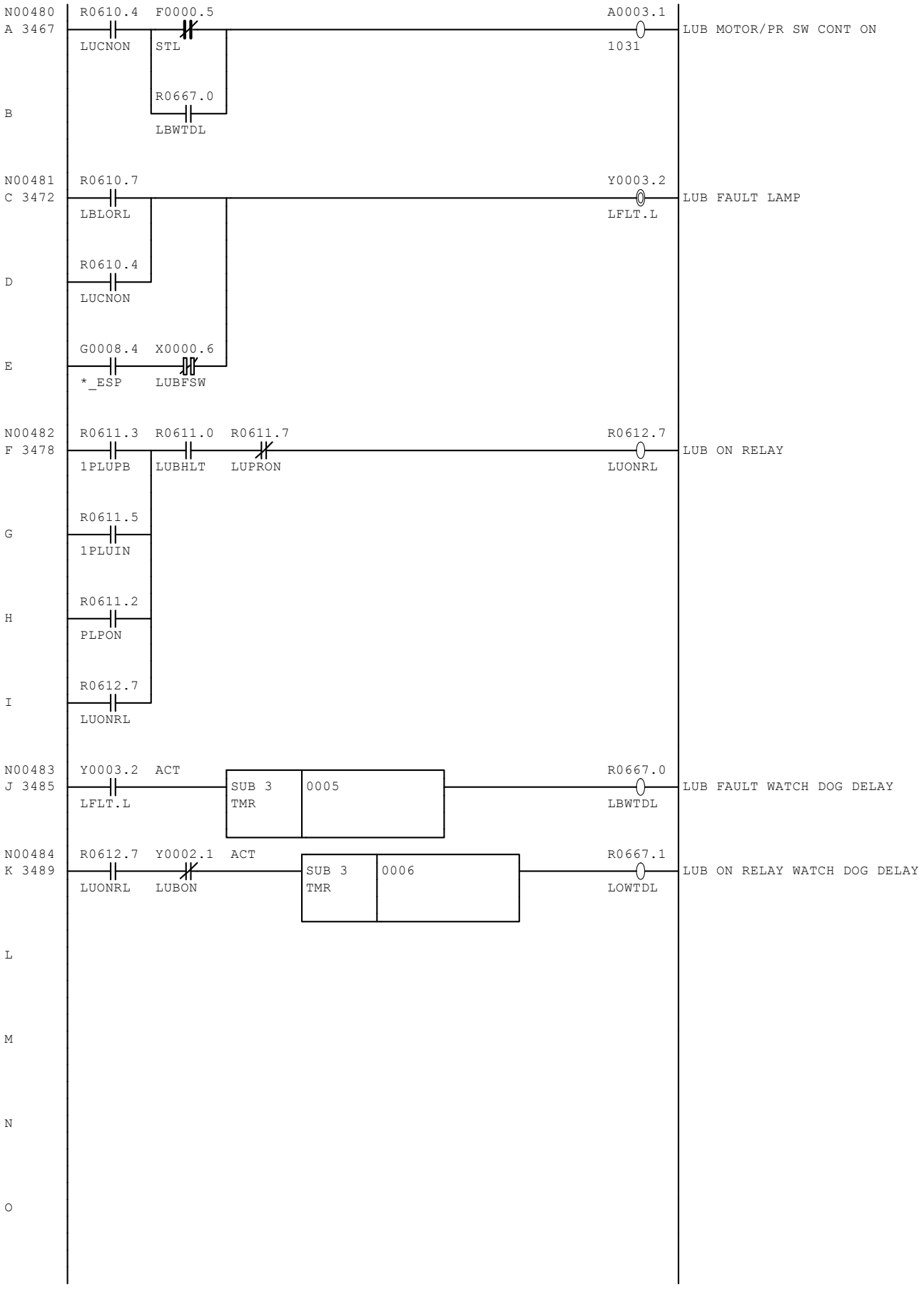
N00480
A 3467
R0610.4
LUCNON
F0000.5
STL
R0667.0
LBWTDL
B
A0003.1
1031
LUB MOTOR/PR SW CONT ON
N00481
C 3472
R0610.7
LBLORL
R0610.4
LUCNON
D
G0008.4
*_ESP
X0000.6
LUBFSW
E
Y0003.2
LFLT.L
LUB FAULT LAMP
N00482
F 3478
R0611.3
1PLUPB
R0611.0
LUBHLT
R0611.7
LUPRON
R0611.5
1PLUIN
G
R0611.2
PLPON
H
R0612.7
LUONRL
I
R0612.7
LUONRL
LUB ON RELAY
N00483
J 3485
Y0003.2
LFLT.L
ACT
SUB 3
TMR
0005
R0667.0
LBWTDL
LUB FAULT WATCH DOG DELAY
N00484
K 3489
R0612.7
LUONRL
Y0002.1
LUBON
ACT
SUB 3
TMR
0006
R0667.1
LOWTDL
LUB ON RELAY WATCH DOG DELAY
L
M
N
O

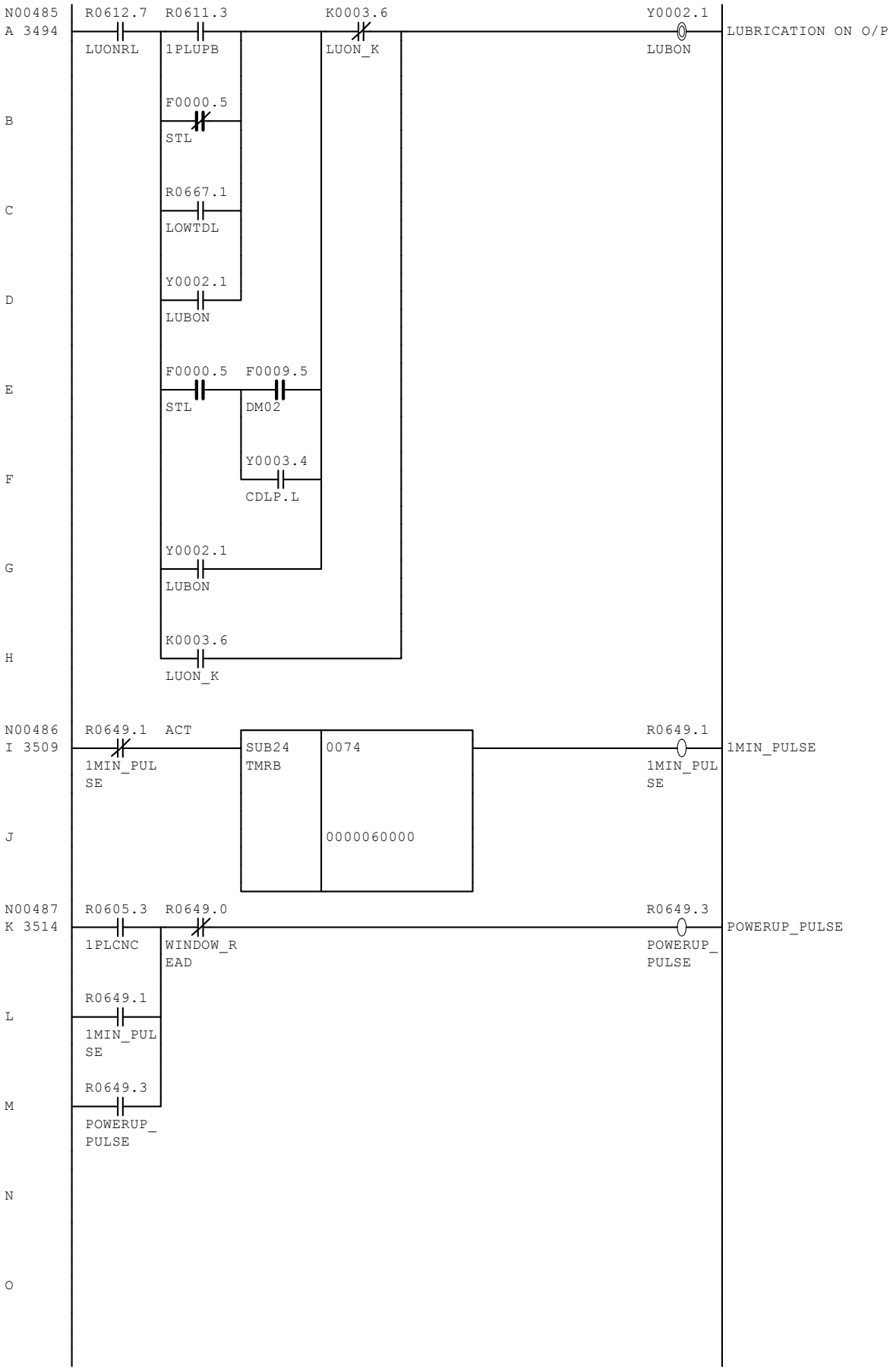
N00485
A 3494
R0612.7
LUONRL
R0611.3
1PLUPB
K0003.6
LUON_K
Y0002.1
LUBON
LUBRICATION ON O/P
B
F0000.5
STL
C
R0667.1
LOWTDL
D
Y0002.1
LUBON
E
F0000.5
STL
F0009.5
DM02
F
Y0003.4
CDLP.L
G
Y0002.1
LUBON
H
K0003.6
LUON_K
N00486
I 3509
R0649.1
1MIN_PUL
SE
ACT
SUB24
TMRB
0074
0000060000
J
R0649.1
1MIN_PUL
SE
1MIN_PULSE
N00487
K 3514
R0605.3
1PLCNC
R0649.0
WINDOW_R
EAD
R0649.3
POWERUP_
PULSE
POWERUP_PULSE
L
R0649.1
1MIN_PUL
SE
M
R0649.3
POWERUP_
PULSE
N
O

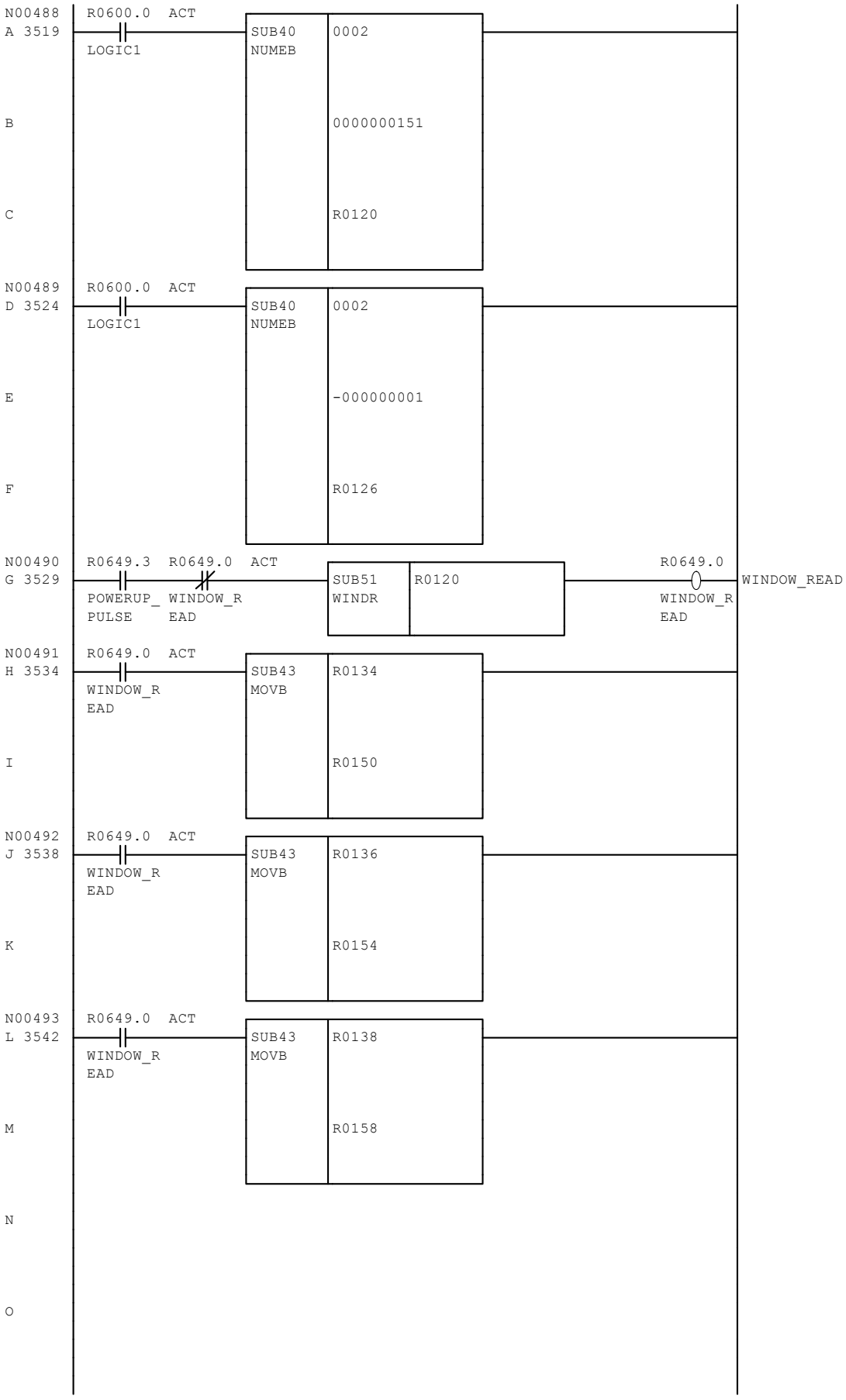
N00488
A 3519
R0600.0 ACT
LOGIC1
SUB40
NUMEB
0002
B
0000000151
C
R0120
N00489
D 3524
R0600.0 ACT
LOGIC1
SUB40
NUMEB
0002
E
-000000001
F
R0126
N00490
G 3529
R0649.3
POWERUP_
PULSE
R0649.0
WINDOW_R
EAD
ACT
SUB51
WINDR
R0120
R0649.0
WINDOW_R
EAD
WINDOW_READ
N00491
H 3534
R0649.0 ACT
WINDOW_R
EAD
SUB43
MOVB
R0134
I
R0150
N00492
J 3538
R0649.0 ACT
WINDOW_R
EAD
SUB43
MOVB
R0136
K
R0154
N00493
L 3542
R0649.0 ACT
WINDOW_R
EAD
SUB43
MOVB
R0138
M
R0158
N
O

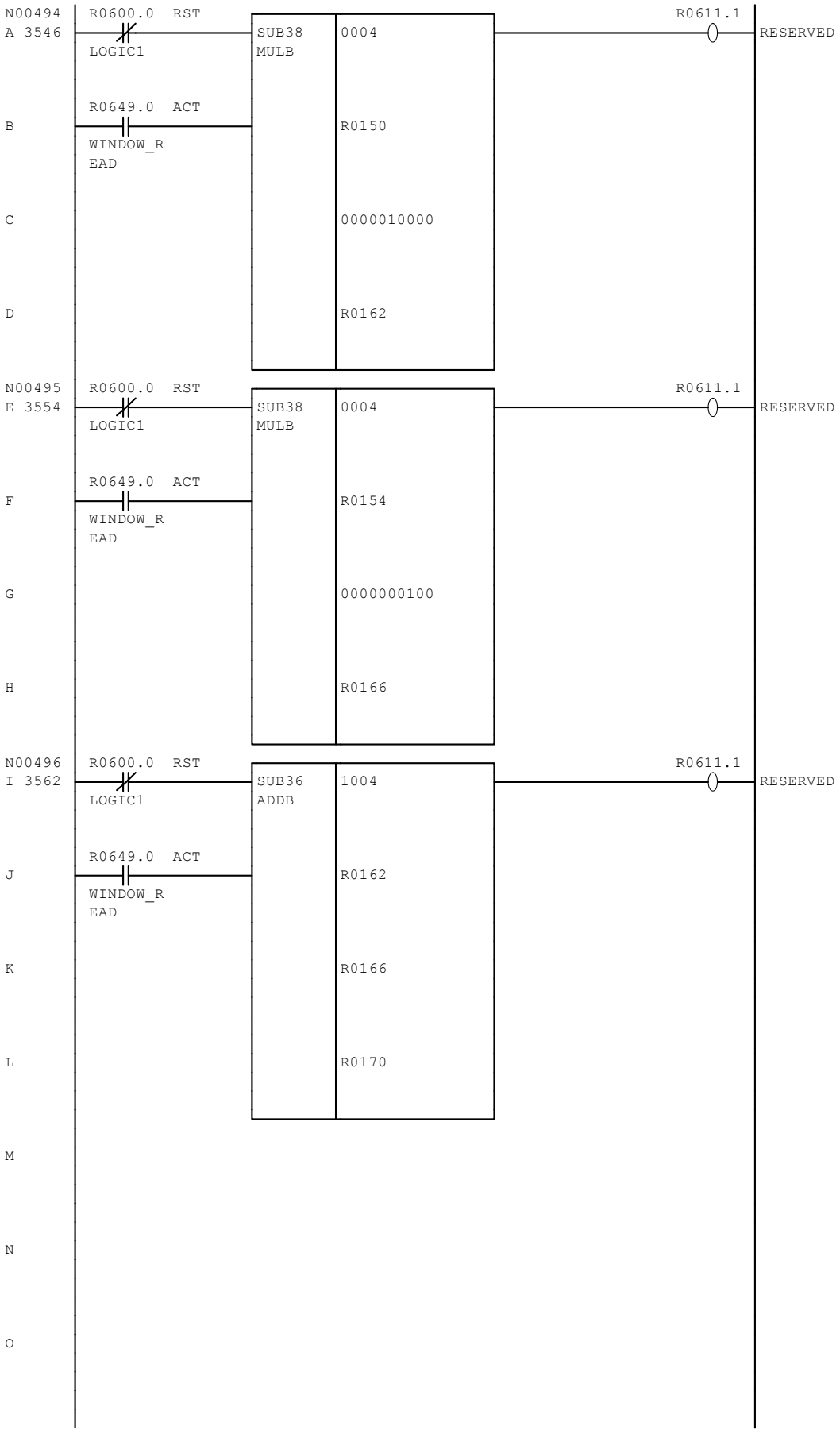
N00494
A 3546
R0600.0 RST
LOGIC1
R0649.0 ACT
B
WINDOW_R
EAD
C
D
SUB38
MULB
0004
R0150
0000010000
R0162
R0611.1
RESERVED
N00495
E 3554
R0600.0 RST
LOGIC1
R0649.0 ACT
F
WINDOW_R
EAD
G
H
SUB38
MULB
0004
R0154
0000000100
R0166
R0611.1
RESERVED
N00496
I 3562
R0600.0 RST
LOGIC1
R0649.0 ACT
J
WINDOW_R
EAD
K
L
M
N
O
SUB36
ADDB
1004
R0162
R0166
R0170
R0611.1
RESERVED

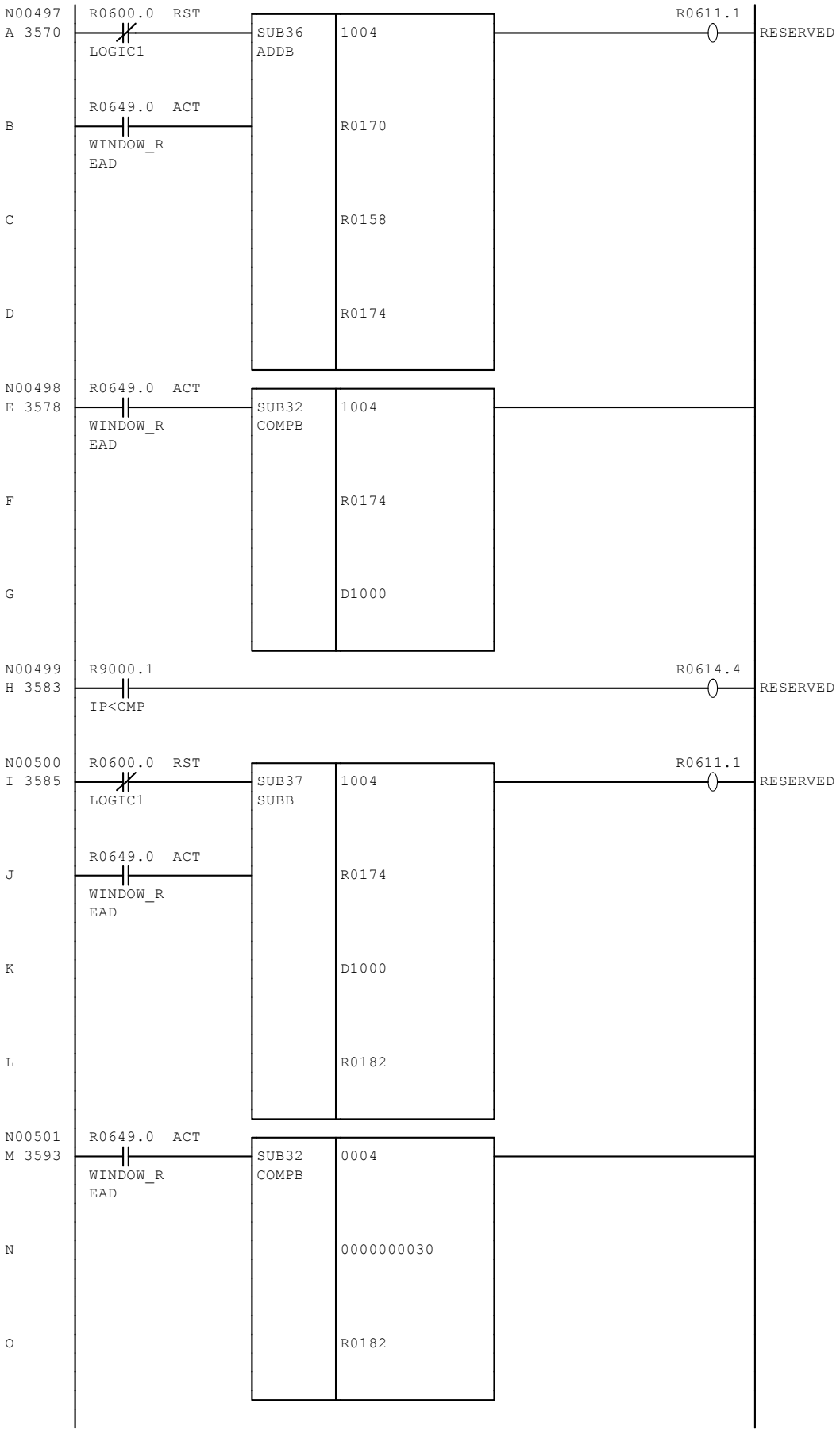
N00497
A 3570
R0600.0 RST
LOGIC1
SUB36
ADDB
1004
R0611.1
RESERVED
B
R0649.0 ACT
WINDOW_R
EAD
R0170
C
R0158
D
R0174
N00498
E 3578
R0649.0 ACT
WINDOW_R
EAD
SUB32
COMPB
1004
F
R0174
G
D1000
N00499
H 3583
R9000.1
IP<CMP
R0614.4
RESERVED
N00500
I 3585
R0600.0 RST
LOGIC1
SUB37
SUBB
1004
R0611.1
RESERVED
J
R0649.0 ACT
WINDOW_R
EAD
R0174
K
D1000
L
R0182
N00501
M 3593
R0649.0 ACT
WINDOW_R
EAD
SUB32
COMPB
0004
N
0000000030
O
R0182

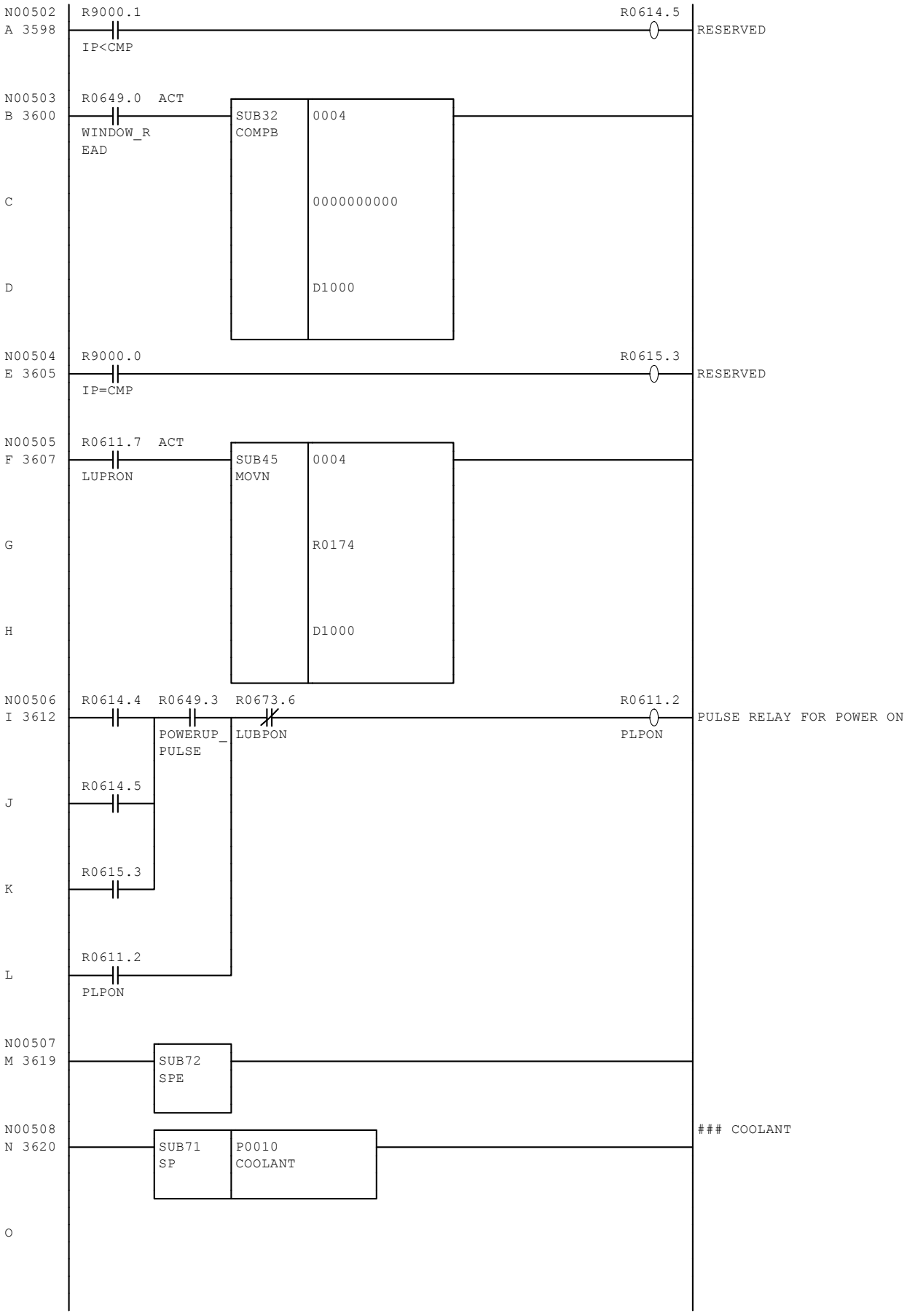
N00502
A 3598
R9000.1
IP<CMP
R0614.5
RESERVED
N00503
B 3600
R0649.0 ACT
WINDOW_R
EAD
SUB32
COMPB
0004
C
0000000000
D
D1000
N00504
E 3605
R9000.0
IP=CMP
R0615.3
RESERVED
N00505
F 3607
R0611.7 ACT
LUPRON
SUB45
MOVN
0004
G
R0174
H
D1000
N00506
I 3612
R0614.4
R0649.3
POWERUP_
PULSE
R0673.6
LUBPON
R0611.2
PLPON
PULSE RELAY FOR POWER ON
R0614.5
J
R0615.3
K
R0611.2
L
PLPON
N00507
M 3619
SUB72
SPE
N00508
N 3620
SUB71
SP
P0010
COOLANT
COOLANT
O

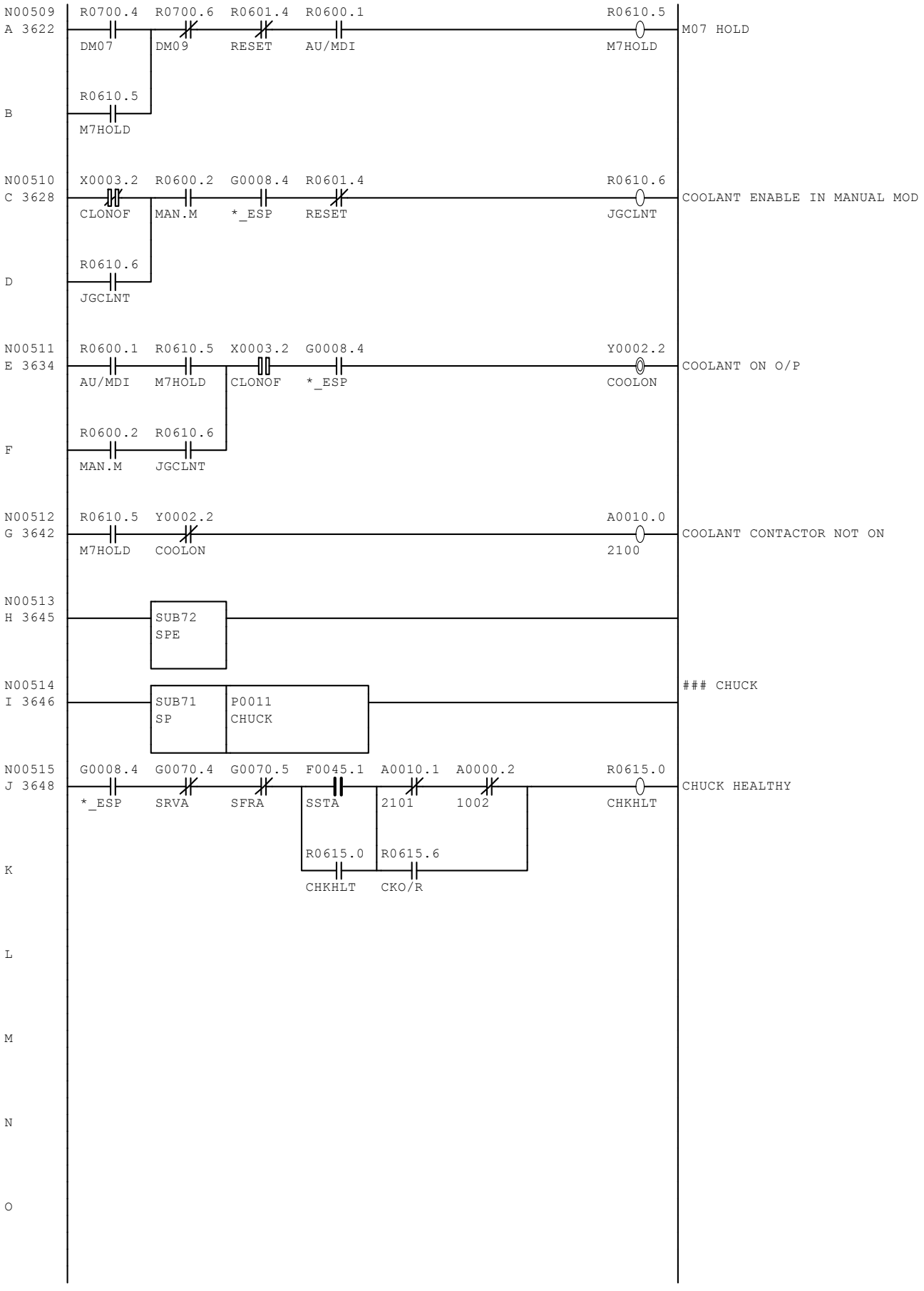
N00509
A 3622
R0700.4
DM07
R0700.6
DM09
R0601.4
RESET
R0600.1
AU/MDI
R0610.5
M7HOLD
M07 HOLD
B
R0610.5
M7HOLD
N00510
C 3628
X0003.2
CLONOF
R0600.2
MAN.M
G0008.4
*_ESP
R0601.4
RESET
R0610.6
JGCLNT
COOLANT ENABLE IN MANUAL MOD
D
R0610.6
JGCLNT
N00511
E 3634
R0600.1
AU/MDI
R0610.5
M7HOLD
X0003.2
CLONOF
G0008.4
*_ESP
Y0002.2
COOLON
COOLANT ON O/P
F
R0600.2
MAN.M
R0610.6
JGCLNT
N00512
G 3642
R0610.5
M7HOLD
Y0002.2
COOLON
A0010.0
2100
COOLANT CONTACTOR NOT ON
N00513
H 3645
SUB72
SPE
N00514
I 3646
SUB71
SP
P0011
CHUCK
CHUCK
N00515
J 3648
G0008.4
*_ESP
G0070.4
SRVA
G0070.5
SFRA
F0045.1
SSTA
A0010.1
2101
A0000.2
1002
R0615.0
CHKHLT
CHUCK HEALTHY
K
R0615.0
CHKHLT
R0615.6
CKO/R
L
M
N
O

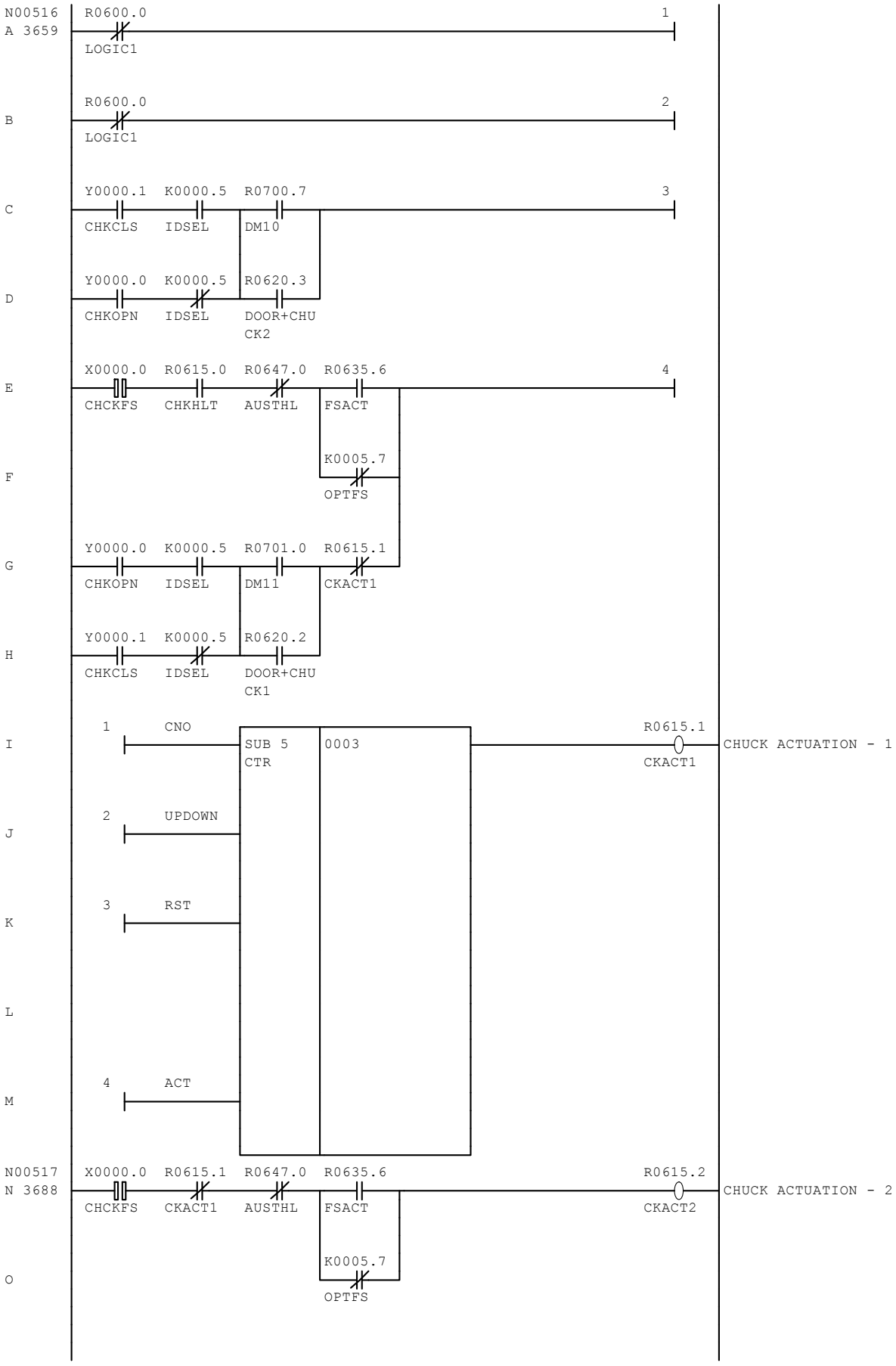
N00516
A 3659
R0600.0
LOGIC1
1
B
R0600.0
LOGIC1
2
C
Y0000.1
CHKCLS
K0000.5
IDSEL
R0700.7
DM10
3
D
Y0000.0
CHKOPN
K0000.5
IDSEL
R0620.3
DOOR+CHU CK2
E
X0000.0
CHCKFS
R0615.0
CHKHLT
R0647.0
AUSTHL
R0635.6
FSACT
4
F
K0005.7
OPTFS
G
Y0000.0
CHKOPN
K0000.5
IDSEL
R0701.0
DM11
R0615.1
CKACT1
H
Y0000.1
CHKCLS
K0000.5
IDSEL
R0620.2
DOOR+CHU CK1
I
1
CNO
SUB 5
CTR
0003
R0615.1
CKACT1
CHUCK ACTUATION - 1
J
2
UPDOWN
K
3
RST
L
M
4
ACT
N00517
N 3688
X0000.0
CHCKFS
R0615.1
CKACT1
R0647.0
AUSTHL
R0635.6
FSACT
R0615.2
CKACT2
CHUCK ACTUATION - 2
O
K0005.7
OPTFS

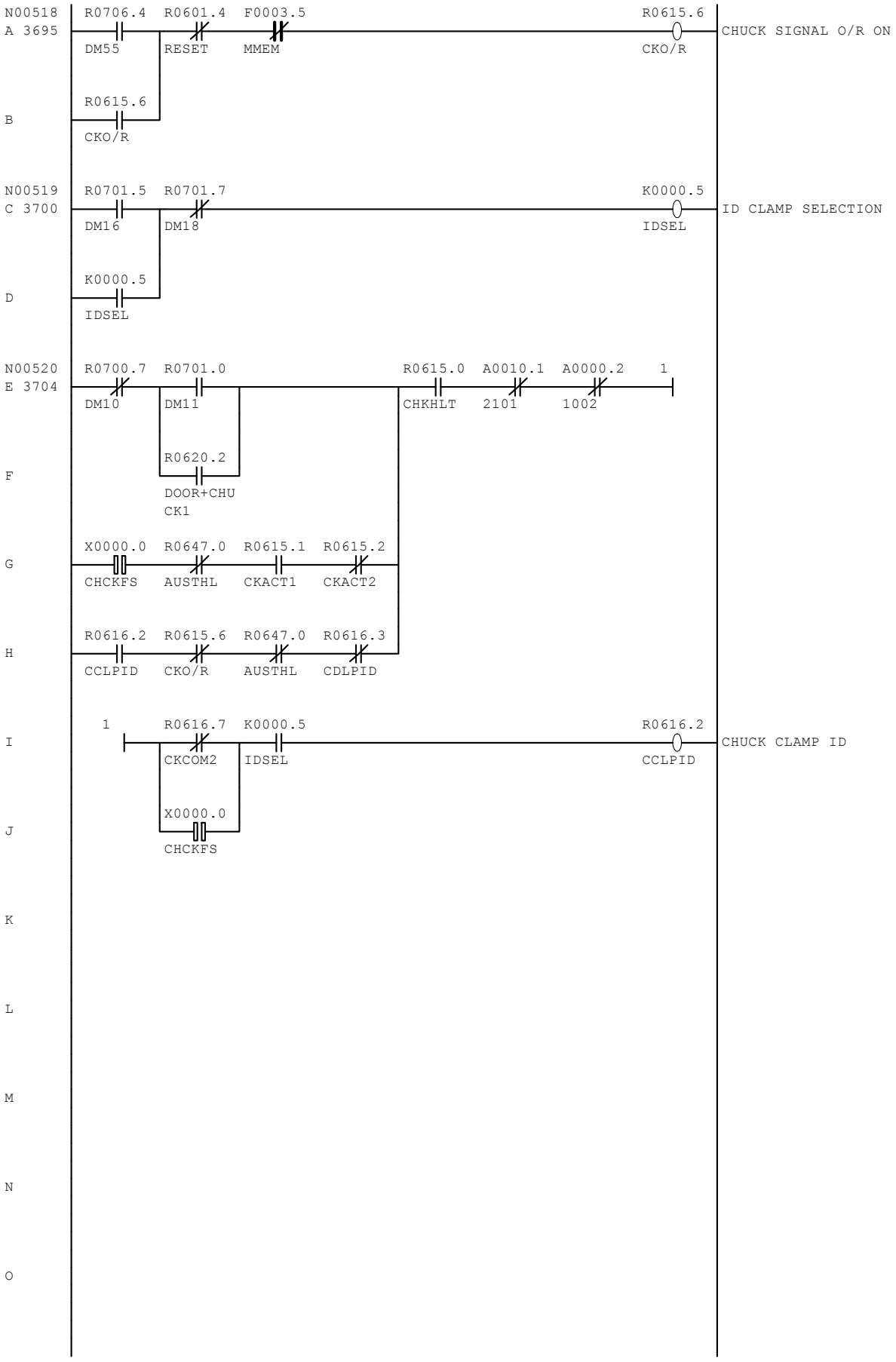
N00518
A 3695
R0706.4
DM55
R0601.4
RESET
F0003.5
MMEM
R0615.6
CKO/R
CHUCK SIGNAL O/R ON
B
R0615.6
CKO/R
N00519
C 3700
R0701.5
DM16
R0701.7
DM18
K0000.5
IDSEL
ID CLAMP SELECTION
D
K0000.5
IDSEL
N00520
E 3704
R0700.7
DM10
R0701.0
DM11
R0615.0
CHKHLT
A0010.1
2101
A0000.2
1002
1
F
R0620.2
DOOR+CHU
CK1
G
X0000.0
CHCKFS
R0647.0
AUSTHL
R0615.1
CKACT1
R0615.2
CKACT2
H
R0616.2
CCLPID
R0615.6
CKO/R
R0647.0
AUSTHL
R0616.3
CDLPID
I
1
R0616.7
CKCOM2
K0000.5
IDSEL
R0616.2
CCLPID
CHUCK CLAMP ID
J
X0000.0
CHCKFS
K
L
M
N
O

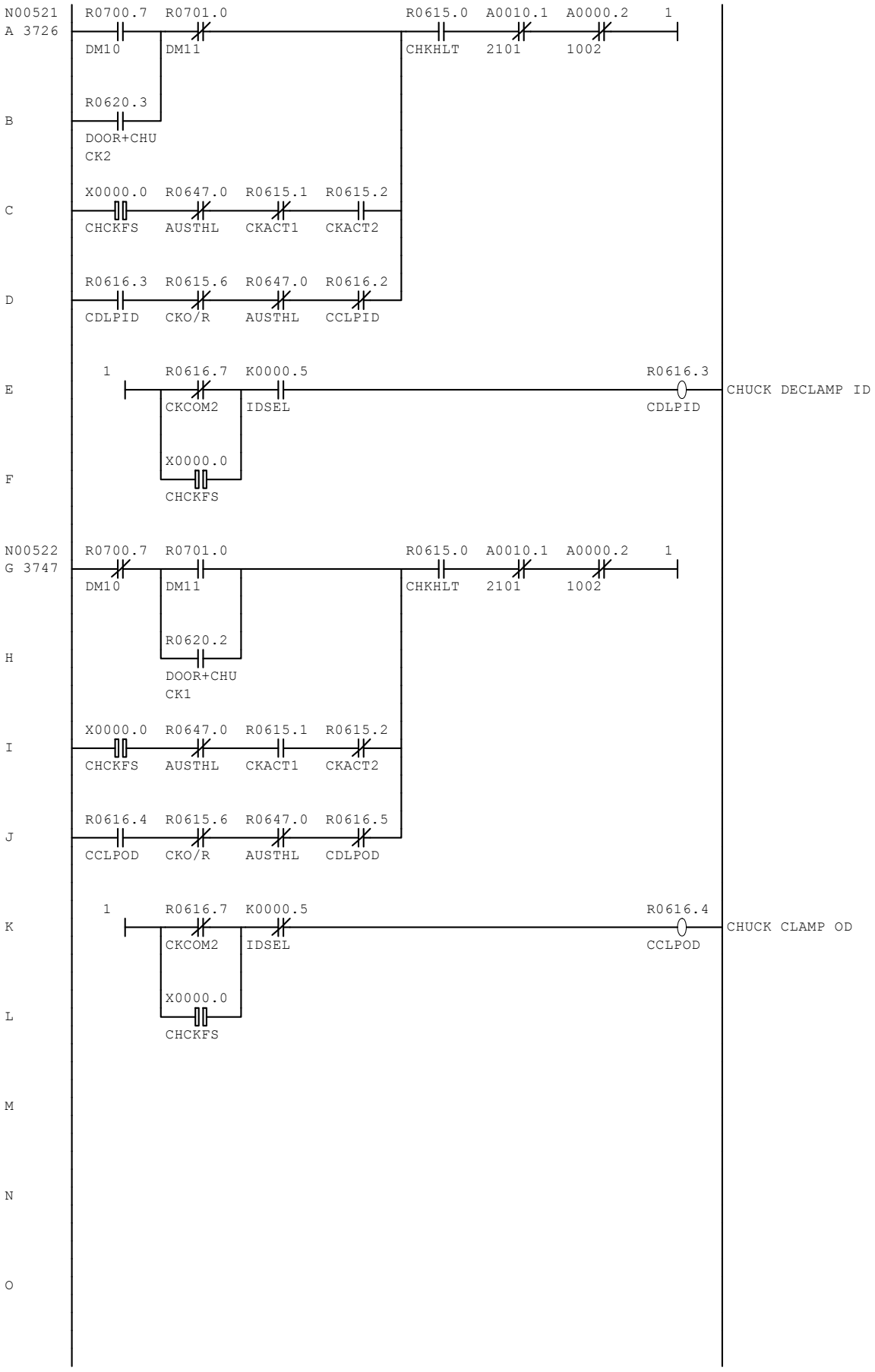
N00521
A 3726
R0700.7
DM10
R0701.0
DM11
R0615.0
CHKHLT
A0010.1
2101
A0000.2
1002
1
B
R0620.3
DOOR+CHU
CK2
C
X0000.0
CHCKFS
R0647.0
AUSTHL
R0615.1
CKACT1
R0615.2
CKACT2
D
R0616.3
CDLPID
R0615.6
CKO/R
R0647.0
AUSTHL
R0616.2
CCLPID
E
1
R0616.7
CKCOM2
K0000.5
IDSEL
R0616.3
CDLPID
CHUCK DECLAMP ID
F
X0000.0
CHCKFS
N00522
G 3747
R0700.7
DM10
R0701.0
DM11
R0615.0
CHKHLT
A0010.1
2101
A0000.2
1002
1
H
R0620.2
DOOR+CHU
CK1
I
X0000.0
CHCKFS
R0647.0
AUSTHL
R0615.1
CKACT1
R0615.2
CKACT2
J
R0616.4
CCLPOD
R0615.6
CKO/R
R0647.0
AUSTHL
R0616.5
CDLPOD
K
1
R0616.7
CKCOM2
K0000.5
IDSEL
R0616.4
CCLPOD
CHUCK CLAMP OD
L
X0000.0
CHCKFS
M
N
O

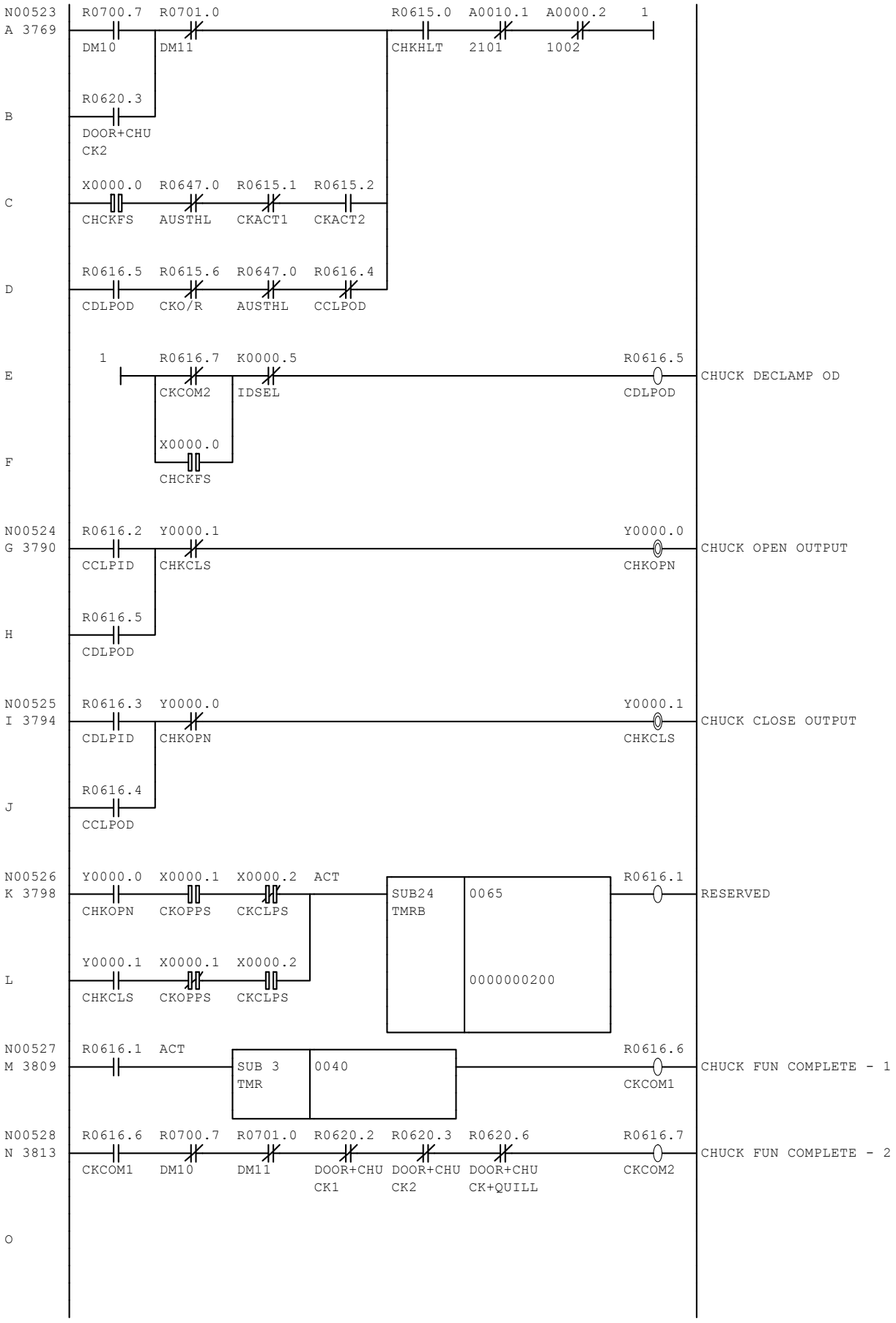
N00523
A 3769
R0700.7
DM10
R0701.0
DM11
R0615.0
CHKHLT
A0010.1
2101
A0000.2
1002
1
B
R0620.3
DOOR+CHU
CK2
C
X0000.0
CHCKFS
R0647.0
AUSTHL
R0615.1
CKACT1
R0615.2
CKACT2
D
R0616.5
CDLPOD
R0615.6
CKO/R
R0647.0
AUSTHL
R0616.4
CCLPOD
E
1
R0616.7
CKCOM2
K0000.5
IDSEL
R0616.5
CDLPOD
CHUCK DECLAMP OD
F
X0000.0
CHCKFS
N00524
G 3790
R0616.2
CCLPID
Y0000.1
CHKCLS
Y0000.0
CHKOPN
CHUCK OPEN OUTPUT
H
R0616.5
CDLPOD
N00525
I 3794
R0616.3
CDLPID
Y0000.0
CHKOPN
Y0000.1
CHKCLS
CHUCK CLOSE OUTPUT
J
R0616.4
CCLPOD
N00526
K 3798
Y0000.0
CHKOPN
X0000.1
CKOPPS
X0000.2
CKCLPS
ACT
SUB24
TMRB
0065
0000000200
R0616.1
RESERVED
L
Y0000.1
CHKCLS
X0000.1
CKOPPS
X0000.2
CKCLPS
N00527
M 3809
R0616.1
ACT
SUB 3
TMR
0040
R0616.6
CKCOM1
CHUCK FUN COMPLETE - 1
N00528
N 3813
R0616.6
CKCOM1
R0700.7
DM10
R0701.0
DM11
R0620.2
DOOR+CHU
CK1
R0620.3
DOOR+CHU
CK2
R0620.6
DOOR+CHU
CK+QUILL
R0616.7
CKCOM2
CHUCK FUN COMPLETE - 2
O

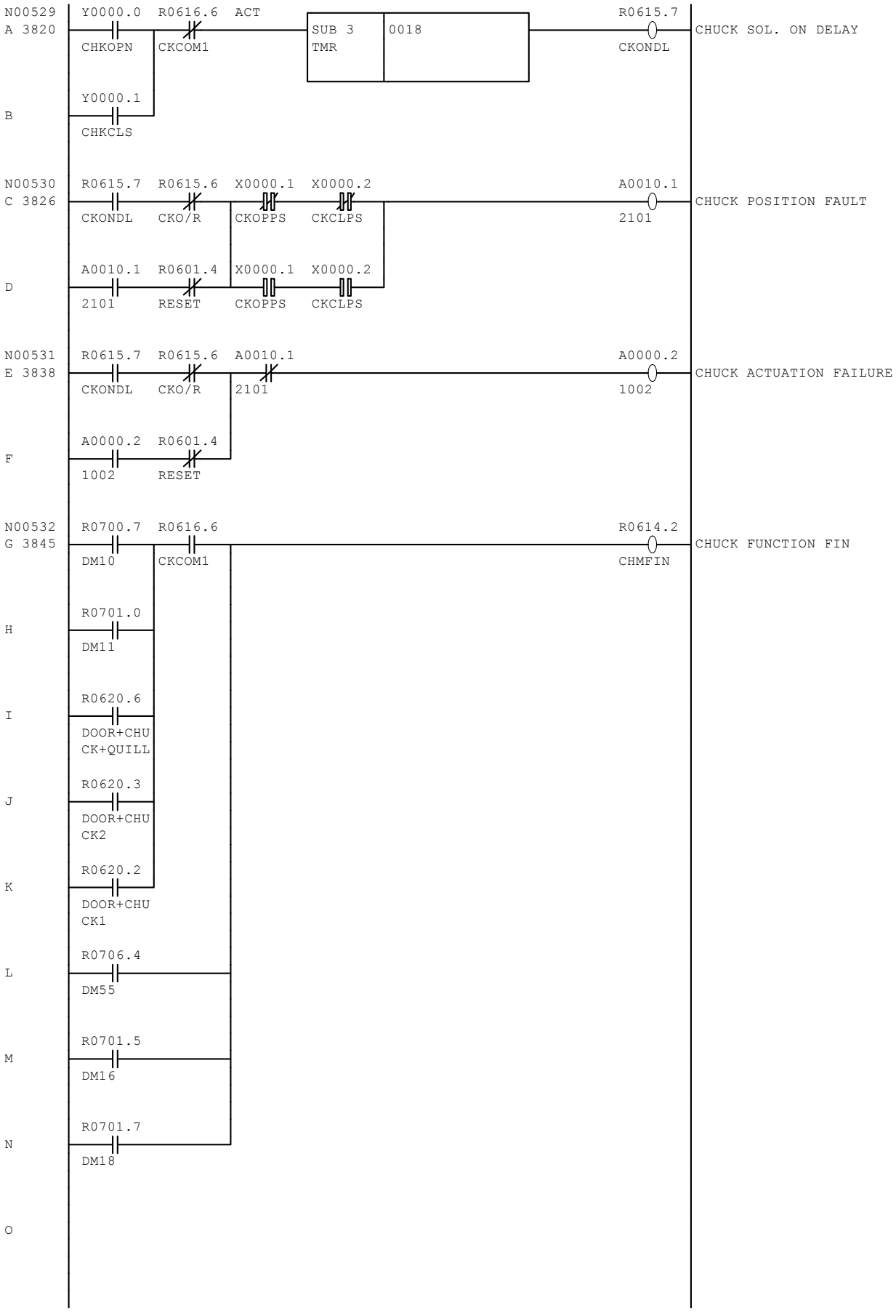
N00529
A 3820
Y0000.0
CHKOPN
R0616.6
CKCOM1
ACT
SUB 3
TMR
0018
R0615.7
CKONDL
CHUCK SOL. ON DELAY
B
Y0000.1
CHKCLS
N00530
C 3826
R0615.7
CKONDL
R0615.6
CKO/R
X0000.1
CKOPPS
X0000.2
CKCLPS
A0010.1
2101
CHUCK POSITION FAULT
D
A0010.1
2101
R0601.4
RESET
X0000.1
CKOPPS
X0000.2
CKCLPS
N00531
E 3838
R0615.7
CKONDL
R0615.6
CKO/R
A0010.1
2101
A0000.2
1002
CHUCK ACTUATION FAILURE
F
A0000.2
1002
R0601.4
RESET
N00532
G 3845
R0700.7
DM10
R0616.6
CKCOM1
R0614.2
CHMFIN
CHUCK FUNCTION FIN
H
R0701.0
DM11
I
R0620.6
DOOR+CHU
CK+QUILL
J
R0620.3
DOOR+CHU
CK2
K
R0620.2
DOOR+CHU
CK1
L
R0706.4
DM55
M
R0701.5
DM16
N
R0701.7
DM18
O

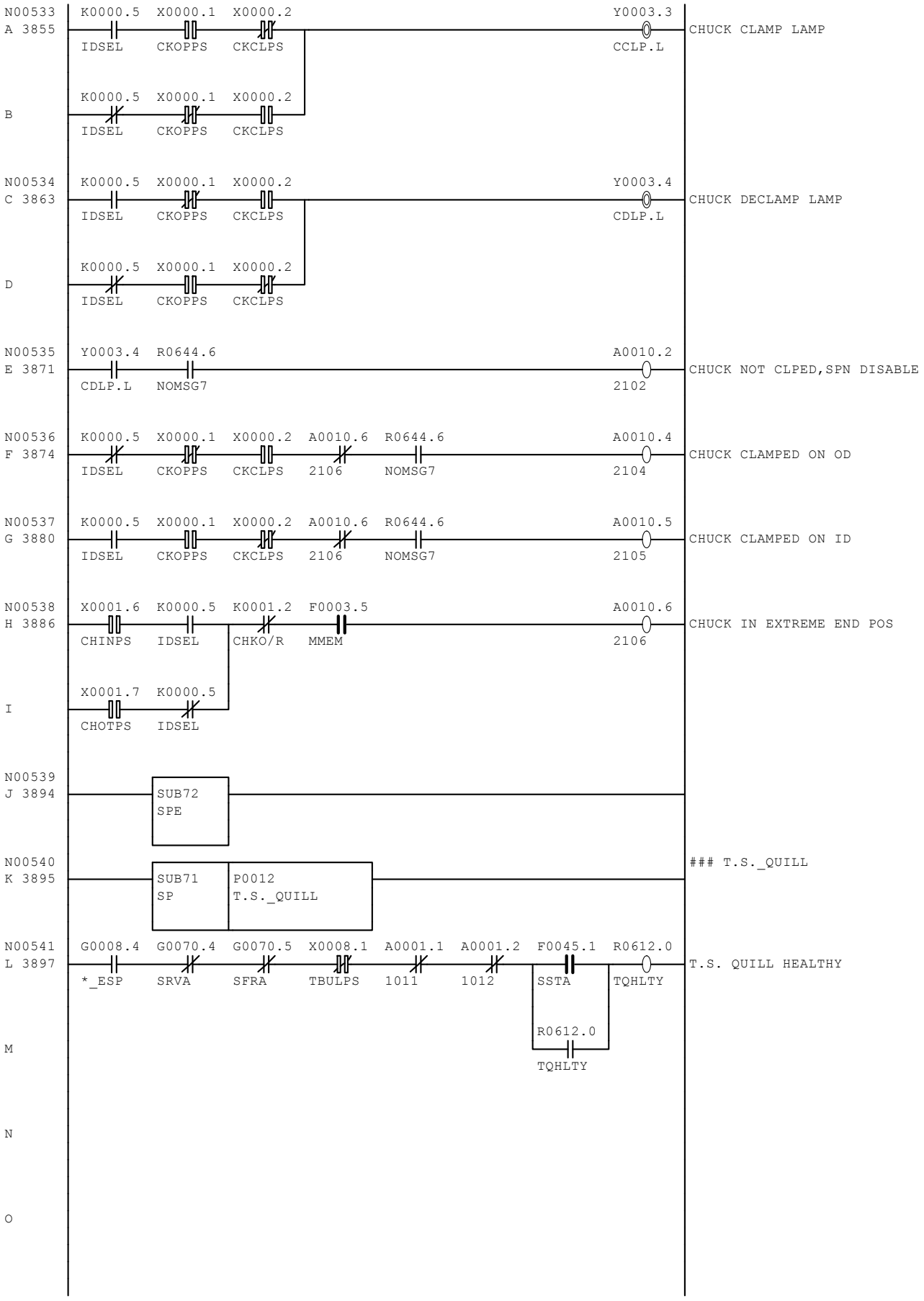
N00533
A 3855
K0000.5 IDSEL
X0000.1 CKOPPS
X0000.2 CKCLPS
Y0003.3 CCLP.L
CHUCK CLAMP LAMP
B
K0000.5 IDSEL
X0000.1 CKOPPS
X0000.2 CKCLPS
N00534
C 3863
K0000.5 IDSEL
X0000.1 CKOPPS
X0000.2 CKCLPS
Y0003.4 CDLP.L
CHUCK DECLAMP LAMP
D
K0000.5 IDSEL
X0000.1 CKOPPS
X0000.2 CKCLPS
N00535
E 3871
Y0003.4 CDLP.L
R0644.6 NOMSG7
A0010.2 2102
CHUCK NOT CLPED,SPN DISABLE
N00536
F 3874
K0000.5 IDSEL
X0000.1 CKOPPS
X0000.2 CKCLPS
A0010.6 2106
R0644.6 NOMSG7
A0010.4 2104
CHUCK CLAMPED ON OD
N00537
G 3880
K0000.5 IDSEL
X0000.1 CKOPPS
X0000.2 CKCLPS
A0010.6 2106
R0644.6 NOMSG7
A0010.5 2105
CHUCK CLAMPED ON ID
N00538
H 3886
X0001.6 CHINPS
K0000.5 IDSEL
K0001.2 CHKO/R
F0003.5 MMEM
A0010.6 2106
CHUCK IN EXTREME END POS
I
X0001.7 CHOTPS
K0000.5 IDSEL
N00539
J 3894
SUB72
SPE
N00540
K 3895
SUB71
SP
P0012
T.S._QUILL
T.S._QUILL
N00541
L 3897
G0008.4 *_ESP
G0070.4 SRVA
G0070.5 SFRA
X0008.1 TBULPS
A0001.1 1011
A0001.2 1012
F0045.1 SSTA
R0612.0 TQHLTY
T.S. QUILL HEALTHY
M
R0612.0
TQHLTY
N
O

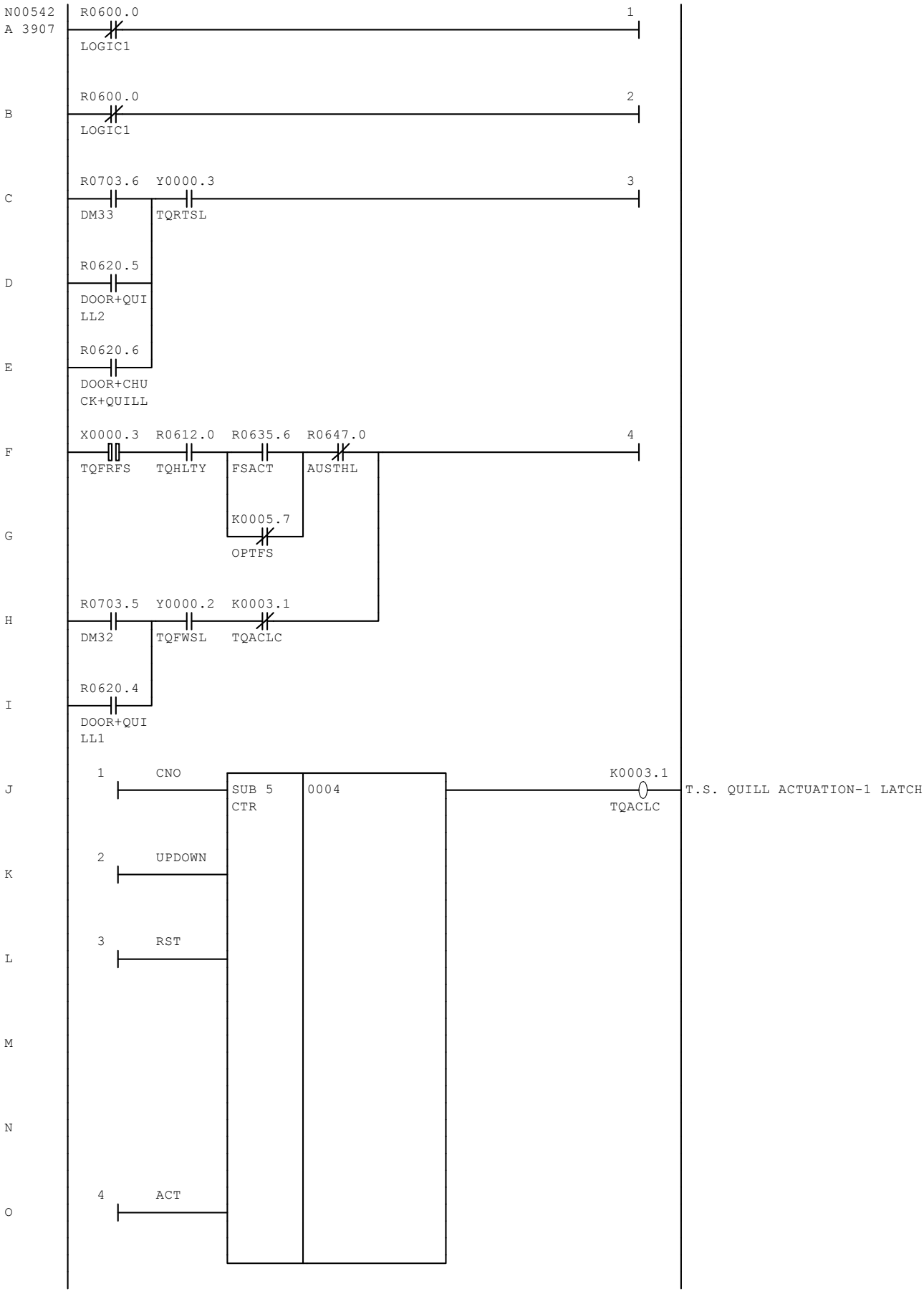
N00542
A 3907
R0600.0
LOGIC1
1
B
R0600.0
LOGIC1
2
C
R0703.6
DM33
Y0000.3
TQRTSL
3
D
R0620.5
DOOR+QUI
LL2
E
R0620.6
DOOR+CHU
CK+QUILL
F
X0000.3
TQFRFS
R0612.0
TQHLTY
R0635.6
FSACT
R0647.0
AUSTHL
4
G
K0005.7
OPTFS
H
R0703.5
DM32
Y0000.2
TQFWSL
K0003.1
TQACLC
I
R0620.4
DOOR+QUI
LL1
J
1
CNO
SUB 5
CTR
0004
K0003.1
TQACLC
T.S. QUILL ACTUATION-1 LATCH
K
2
UPDOWN
L
3
RST
M
N
O
4
ACT

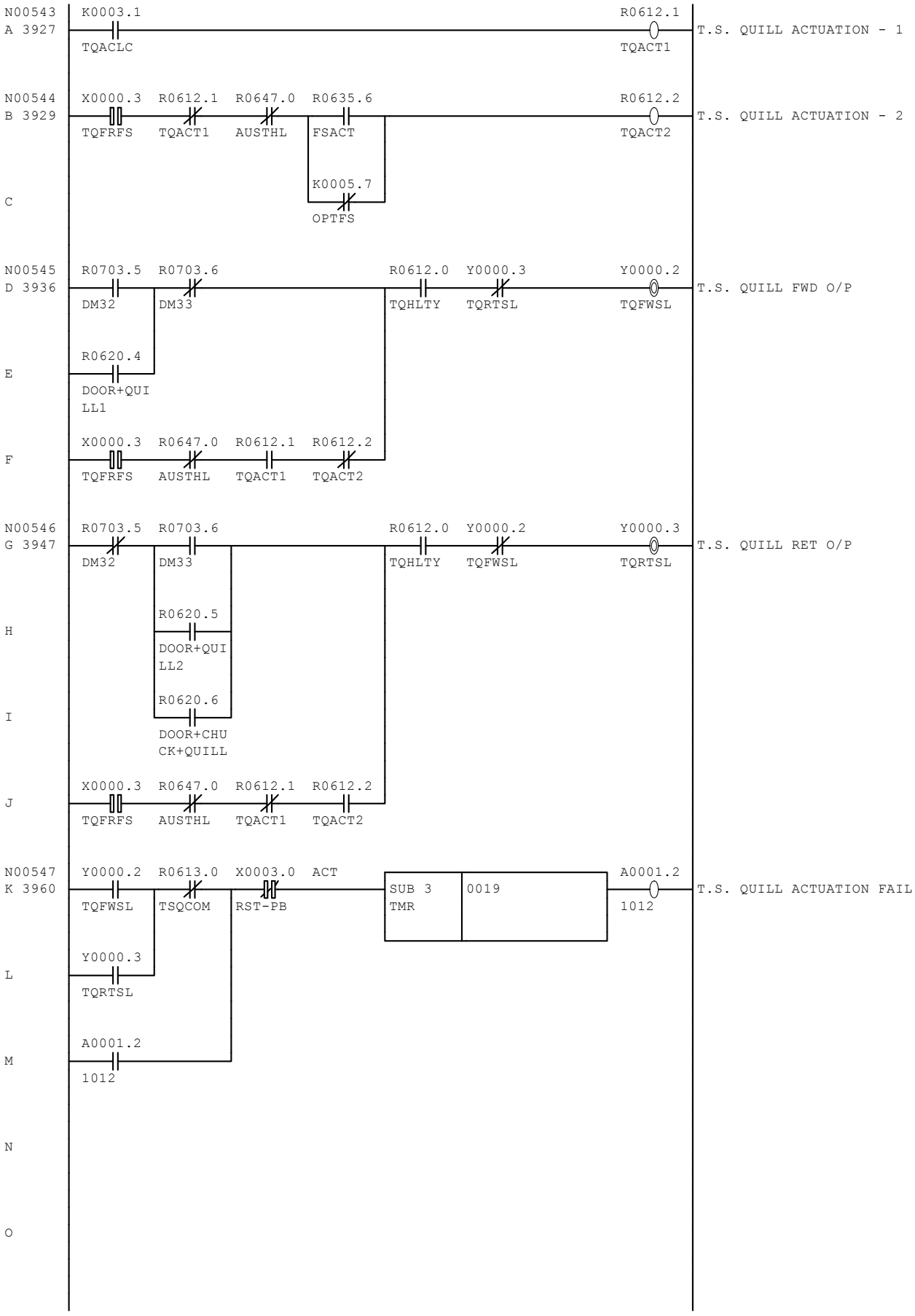
N00543
A 3927
K0003.1
TQACLC
R0612.1
TQACT1
T.S. QUILL ACTUATION - 1
N00544
B 3929
X0000.3
TQFRFS
R0612.1
TQACT1
R0647.0
AUSTHL
R0635.6
FSACT
R0612.2
TQACT2
T.S. QUILL ACTUATION - 2
C
K0005.7
OPTFS
N00545
D 3936
R0703.5
DM32
R0703.6
DM33
R0612.0
TQHLTY
Y0000.3
TQRTSL
Y0000.2
TQFWSL
T.S. QUILL FWD O/P
E
R0620.4
DOOR+QUILL1
F
X0000.3
TQFRFS
R0647.0
AUSTHL
R0612.1
TQACT1
R0612.2
TQACT2
N00546
G 3947
R0703.5
DM32
R0703.6
DM33
R0612.0
TQHLTY
Y0000.2
TQFWSL
Y0000.3
TQRTSL
T.S. QUILL RET O/P
H
R0620.5
DOOR+QUILL2
I
R0620.6
DOOR+CHUCK+QUILL
J
X0000.3
TQFRFS
R0647.0
AUSTHL
R0612.1
TQACT1
R0612.2
TQACT2
N00547
K 3960
Y0000.2
TQFWSL
R0613.0
TSQCOM
X0003.0
RST-PB
ACT
SUB 3
TMR
0019
A0001.2
1012
T.S. QUILL ACTUATION FAIL
L
Y0000.3
TQRTSL
M
A0001.2
1012
N
O

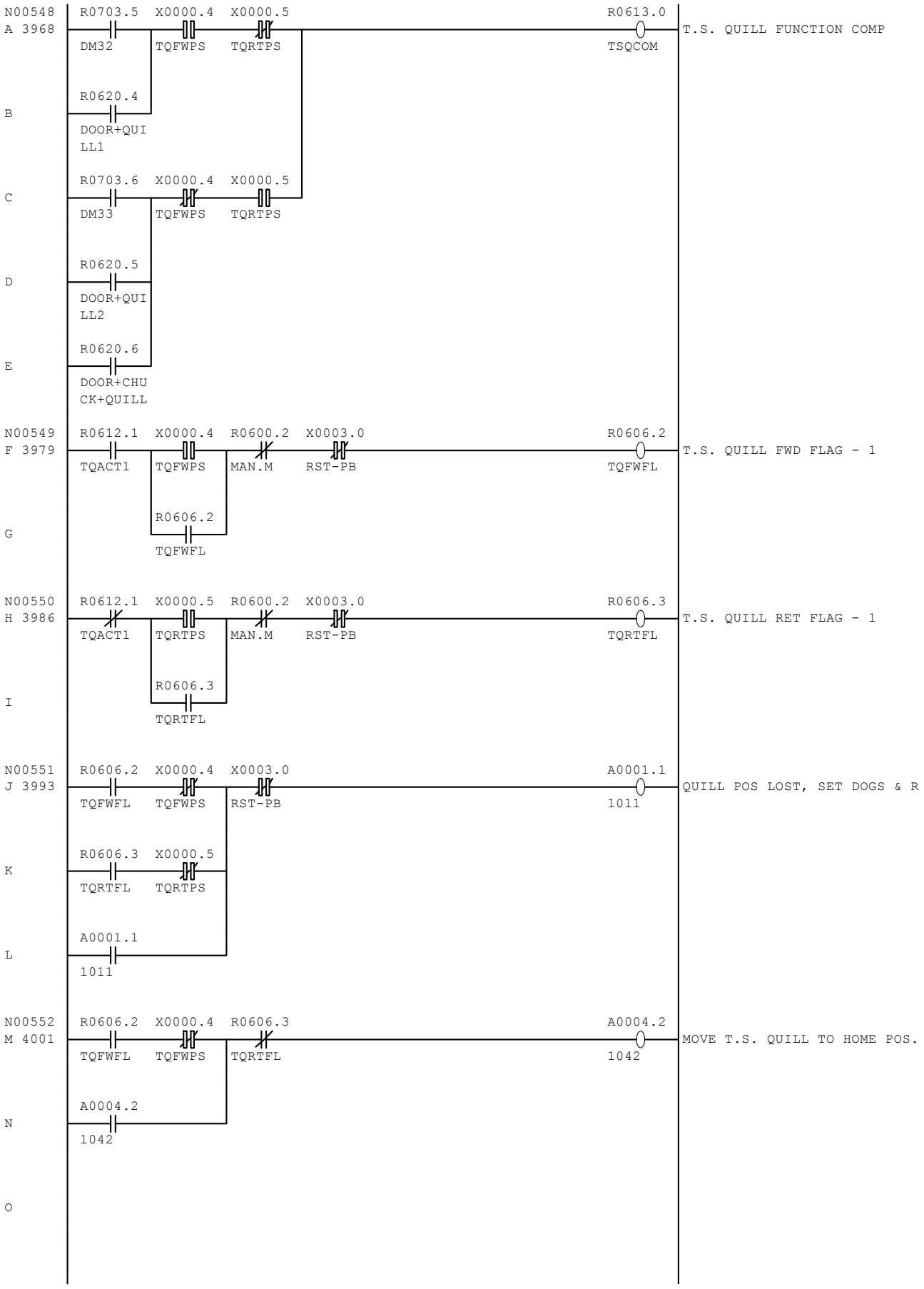
N00548
A 3968
R0703.5
DM32
X0000.4
TQFWPS
X0000.5
TQRTPS
R0613.0
TSQCOM
T.S. QUILL FUNCTION COMP
B
R0620.4
DOOR+QUI
LL1
C
R0703.6
DM33
X0000.4
TQFWPS
X0000.5
TQRTPS
D
R0620.5
DOOR+QUI
LL2
E
R0620.6
DOOR+CHU
CK+QUILL
N00549
F 3979
R0612.1
TQACT1
X0000.4
TQFWPS
R0600.2
MAN.M
X0003.0
RST-PB
R0606.2
TQFWFL
T.S. QUILL FWD FLAG - 1
G
R0606.2
TQFWFL
N00550
H 3986
R0612.1
TQACT1
X0000.5
TQRTPS
R0600.2
MAN.M
X0003.0
RST-PB
R0606.3
TQRTFL
T.S. QUILL RET FLAG - 1
I
R0606.3
TQRTFL
N00551
J 3993
R0606.2
TQFWFL
X0000.4
TQFWPS
X0003.0
RST-PB
A0001.1
1011
QUILL POS LOST, SET DOGS & R
K
R0606.3
TQRTFL
X0000.5
TQRTPS
L
A0001.1
1011
N00552
M 4001
R0606.2
TQFWFL
X0000.4
TQFWPS
R0606.3
TQRTFL
A0004.2
1042
MOVE T.S. QUILL TO HOME POS.
N
A0004.2
1042
O

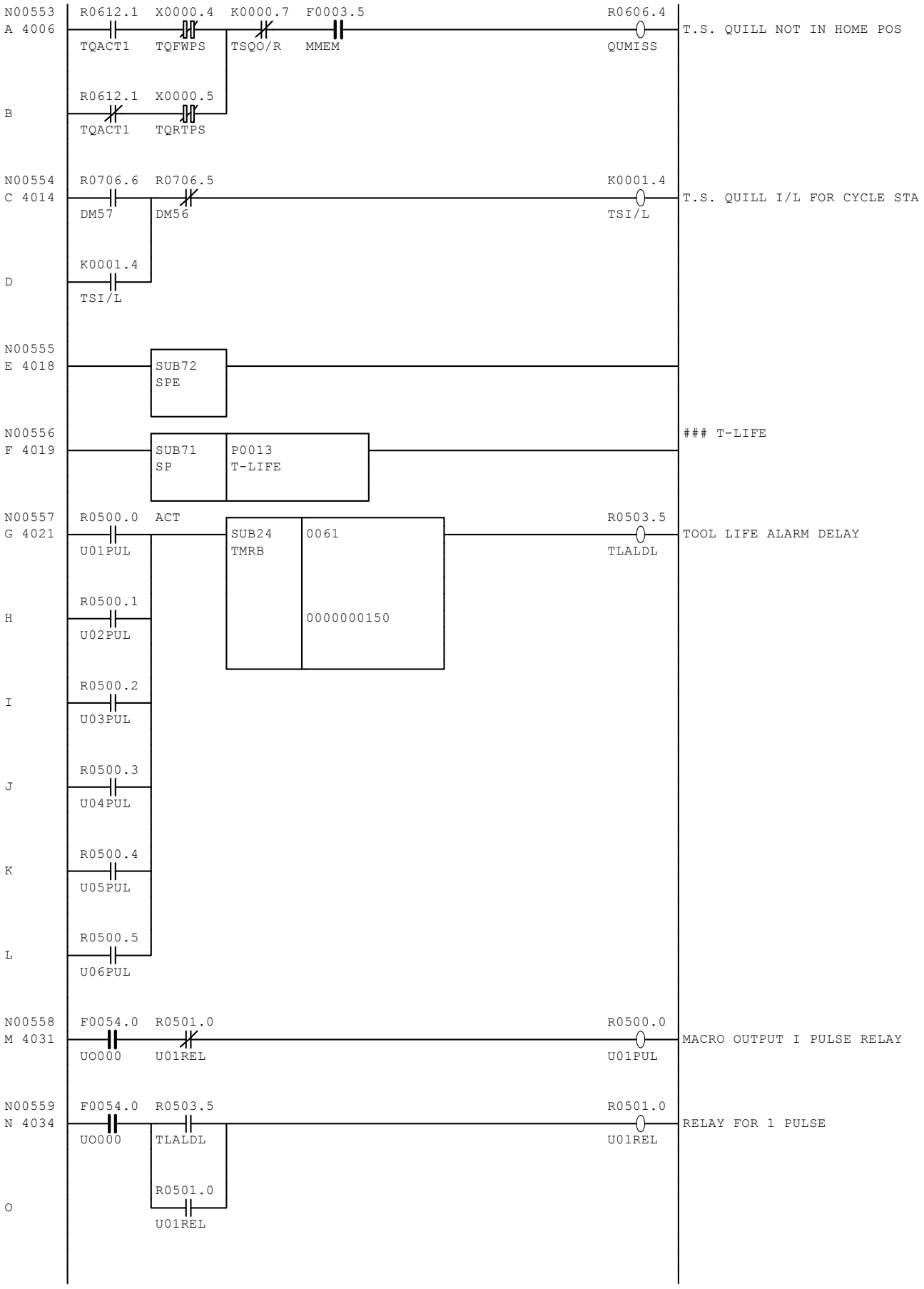
N00553
A 4006
R0612.1
TQACT1
X0000.4
TQFWPS
K0000.7
TSQO/R
F0003.5
MMEM
R0606.4
QUMISS
T.S. QUILL NOT IN HOME POS
B
R0612.1
TQACT1
X0000.5
TQRTPS
N00554
C 4014
R0706.6
DM57
R0706.5
DM56
K0001.4
TSI/L
T.S. QUILL I/L FOR CYCLE STA
D
K0001.4
TSI/L
N00555
E 4018
SUB72
SPE
N00556
F 4019
SUB71
SP
P0013
T-LIFE
T-LIFE
N00557
G 4021
R0500.0
U01PUL
ACT
SUB24
TMRB
0061
0000000150
R0503.5
TLALDL
TOOL LIFE ALARM DELAY
H
R0500.1
U02PUL
I
R0500.2
U03PUL
J
R0500.3
U04PUL
K
R0500.4
U05PUL
L
R0500.5
U06PUL
N00558
M 4031
F0054.0
UO000
R0501.0
U01REL
R0500.0
U01PUL
MACRO OUTPUT I PULSE RELAY
N00559
N 4034
F0054.0
UO000
R0503.5
TLALDL
R0501.0
U01REL
RELAY FOR 1 PULSE
O
R0501.0
U01REL

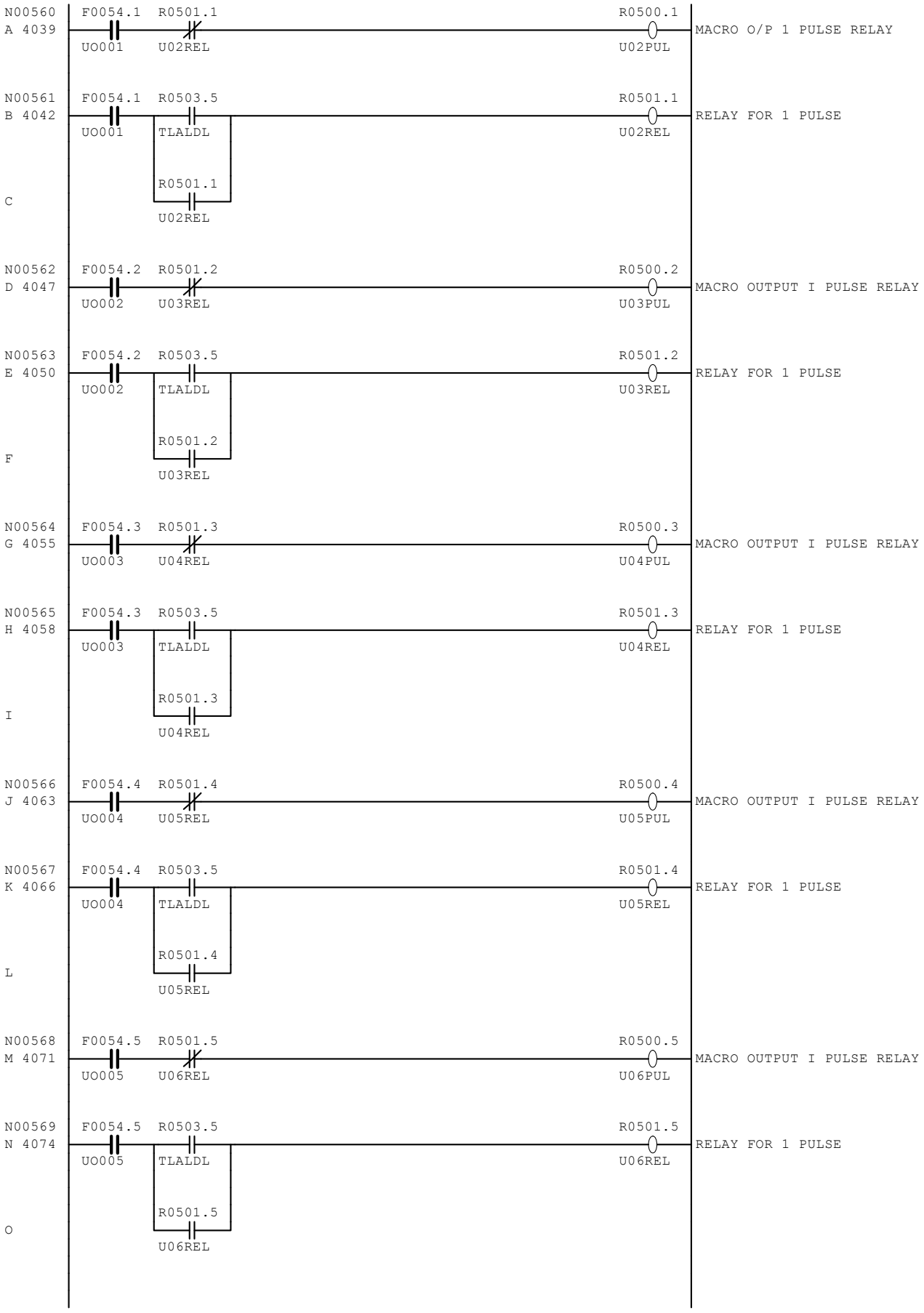
N00560
A 4039
F0054.1
UO001
R0501.1
U02REL
R0500.1
U02PUL
MACRO O/P 1 PULSE RELAY
N00561
B 4042
F0054.1
UO001
R0503.5
TLALDL
R0501.1
U02REL
C
R0501.1
U02REL
RELAY FOR 1 PULSE
N00562
D 4047
F0054.2
UO002
R0501.2
U03REL
R0500.2
U03PUL
MACRO OUTPUT I PULSE RELAY
N00563
E 4050
F0054.2
UO002
R0503.5
TLALDL
R0501.2
U03REL
F
R0501.2
U03REL
RELAY FOR 1 PULSE
N00564
G 4055
F0054.3
UO003
R0501.3
U04REL
R0500.3
U04PUL
MACRO OUTPUT I PULSE RELAY
N00565
H 4058
F0054.3
UO003
R0503.5
TLALDL
R0501.3
U04REL
I
R0501.3
U04REL
RELAY FOR 1 PULSE
N00566
J 4063
F0054.4
UO004
R0501.4
U05REL
R0500.4
U05PUL
MACRO OUTPUT I PULSE RELAY
N00567
K 4066
F0054.4
UO004
R0503.5
TLALDL
R0501.4
U05REL
L
R0501.4
U05REL
RELAY FOR 1 PULSE
N00568
M 4071
F0054.5
UO005
R0501.5
U06REL
R0500.5
U06PUL
MACRO OUTPUT I PULSE RELAY
N00569
N 4074
F0054.5
UO005
R0503.5
TLALDL
R0501.5
U06REL
O
R0501.5
U06REL
RELAY FOR 1 PULSE

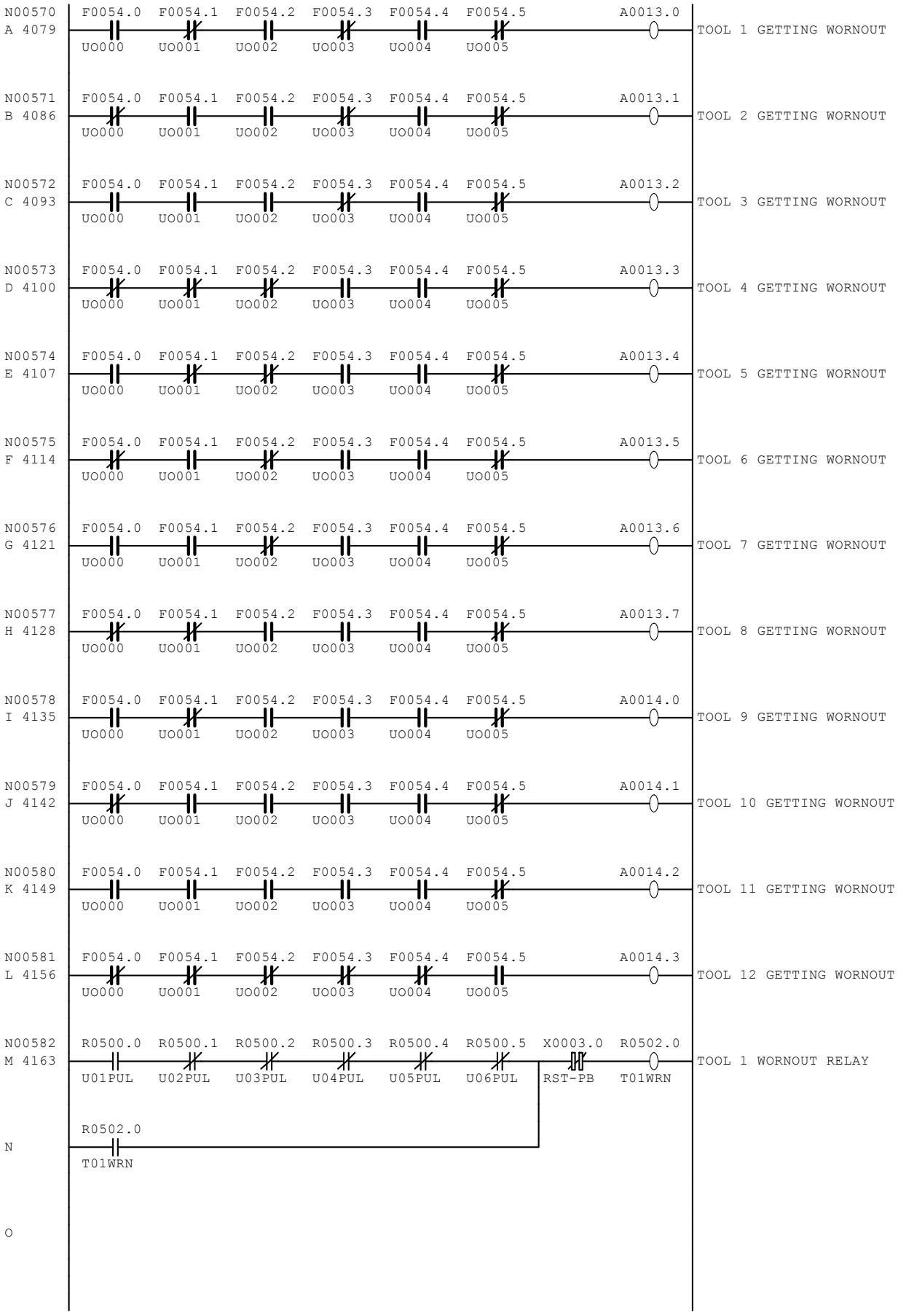
N00570
A 4079
F0054.0 F0054.1 F0054.2 F0054.3 F0054.4 F0054.5 A0013.0
UO000 UO001 UO002 UO003 UO004 UO005
TOOL 1 GETTING WORNOUT
N00571
B 4086
F0054.0 F0054.1 F0054.2 F0054.3 F0054.4 F0054.5 A0013.1
UO000 UO001 UO002 UO003 UO004 UO005
TOOL 2 GETTING WORNOUT
N00572
C 4093
F0054.0 F0054.1 F0054.2 F0054.3 F0054.4 F0054.5 A0013.2
UO000 UO001 UO002 UO003 UO004 UO005
TOOL 3 GETTING WORNOUT
N00573
D 4100
F0054.0 F0054.1 F0054.2 F0054.3 F0054.4 F0054.5 A0013.3
UO000 UO001 UO002 UO003 UO004 UO005
TOOL 4 GETTING WORNOUT
N00574
E 4107
F0054.0 F0054.1 F0054.2 F0054.3 F0054.4 F0054.5 A0013.4
UO000 UO001 UO002 UO003 UO004 UO005
TOOL 5 GETTING WORNOUT
N00575
F 4114
F0054.0 F0054.1 F0054.2 F0054.3 F0054.4 F0054.5 A0013.5
UO000 UO001 UO002 UO003 UO004 UO005
TOOL 6 GETTING WORNOUT
N00576
G 4121
F0054.0 F0054.1 F0054.2 F0054.3 F0054.4 F0054.5 A0013.6
UO000 UO001 UO002 UO003 UO004 UO005
TOOL 7 GETTING WORNOUT
N00577
H 4128
F0054.0 F0054.1 F0054.2 F0054.3 F0054.4 F0054.5 A0013.7
UO000 UO001 UO002 UO003 UO004 UO005
TOOL 8 GETTING WORNOUT
N00578
I 4135
F0054.0 F0054.1 F0054.2 F0054.3 F0054.4 F0054.5 A0014.0
UO000 UO001 UO002 UO003 UO004 UO005
TOOL 9 GETTING WORNOUT
N00579
J 4142
F0054.0 F0054.1 F0054.2 F0054.3 F0054.4 F0054.5 A0014.1
UO000 UO001 UO002 UO003 UO004 UO005
TOOL 10 GETTING WORNOUT
N00580
K 4149
F0054.0 F0054.1 F0054.2 F0054.3 F0054.4 F0054.5 A0014.2
UO000 UO001 UO002 UO003 UO004 UO005
TOOL 11 GETTING WORNOUT
N00581
L 4156
F0054.0 F0054.1 F0054.2 F0054.3 F0054.4 F0054.5 A0014.3
UO000 UO001 UO002 UO003 UO004 UO005
TOOL 12 GETTING WORNOUT
N00582
M 4163
R0500.0 R0500.1 R0500.2 R0500.3 R0500.4 R0500.5 X0003.0 R0502.0
U01PUL U02PUL U03PUL U04PUL U05PUL U06PUL RST-PB T01WRN
TOOL 1 WORNOUT RELAY
R0502.0
N
T01WRN
O

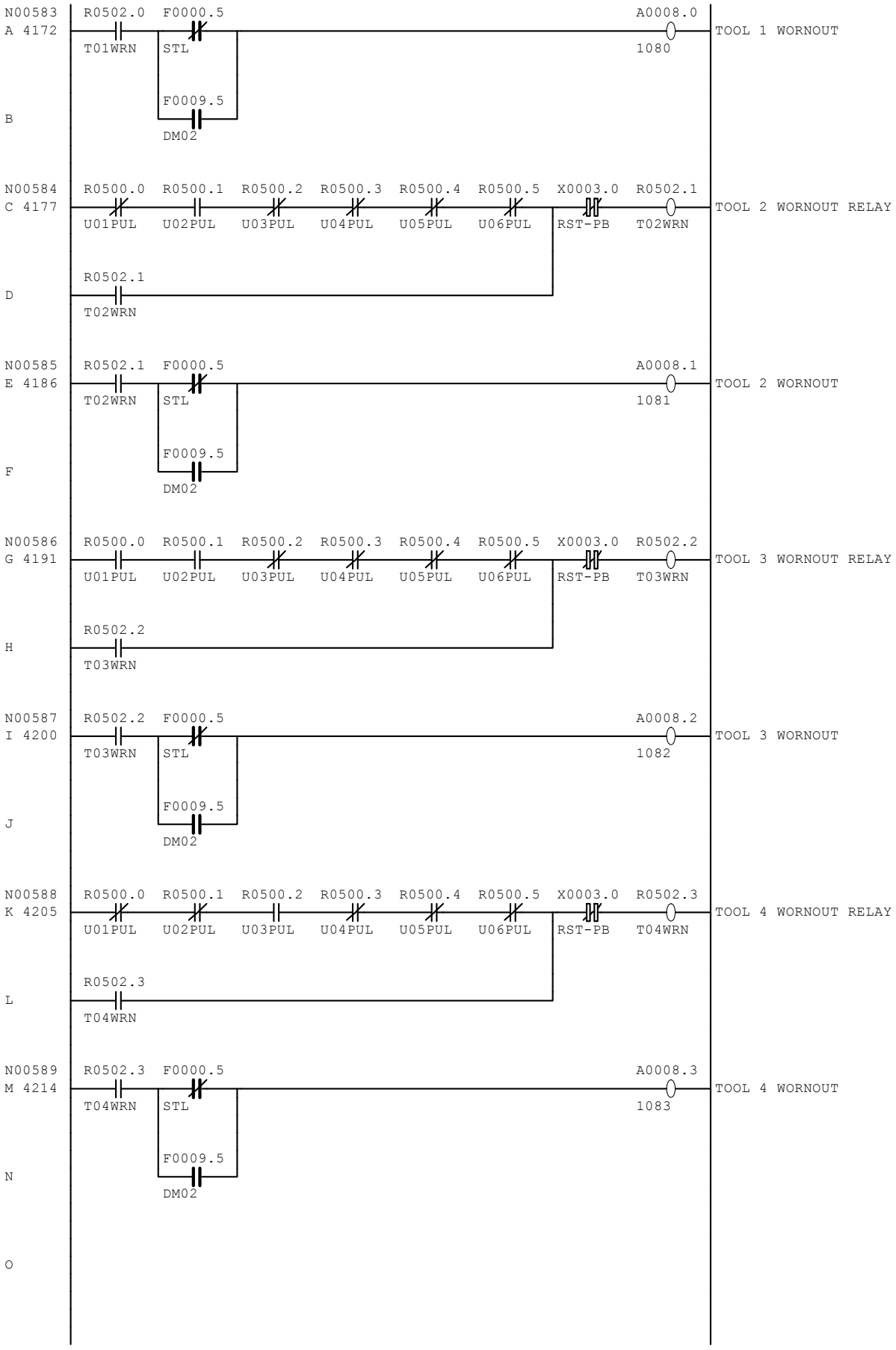
N00583
A 4172
R0502.0
T01WRN
F0000.5
STL
F0009.5
DM02
B
A0008.0
1080
TOOL 1 WORNOUT
N00584
C 4177
R0500.0
U01PUL
R0500.1
U02PUL
R0500.2
U03PUL
R0500.3
U04PUL
R0500.4
U05PUL
R0500.5
U06PUL
X0003.0
RST-PB
R0502.1
T02WRN
TOOL 2 WORNOUT RELAY
D
R0502.1
T02WRN
N00585
E 4186
R0502.1
T02WRN
F0000.5
STL
F0009.5
DM02
F
A0008.1
1081
TOOL 2 WORNOUT
N00586
G 4191
R0500.0
U01PUL
R0500.1
U02PUL
R0500.2
U03PUL
R0500.3
U04PUL
R0500.4
U05PUL
R0500.5
U06PUL
X0003.0
RST-PB
R0502.2
T03WRN
TOOL 3 WORNOUT RELAY
H
R0502.2
T03WRN
N00587
I 4200
R0502.2
T03WRN
F0000.5
STL
F0009.5
DM02
J
A0008.2
1082
TOOL 3 WORNOUT
N00588
K 4205
R0500.0
U01PUL
R0500.1
U02PUL
R0500.2
U03PUL
R0500.3
U04PUL
R0500.4
U05PUL
R0500.5
U06PUL
X0003.0
RST-PB
R0502.3
T04WRN
TOOL 4 WORNOUT RELAY
L
R0502.3
T04WRN
N00589
M 4214
R0502.3
T04WRN
F0000.5
STL
F0009.5
DM02
N
A0008.3
1083
TOOL 4 WORNOUT
O

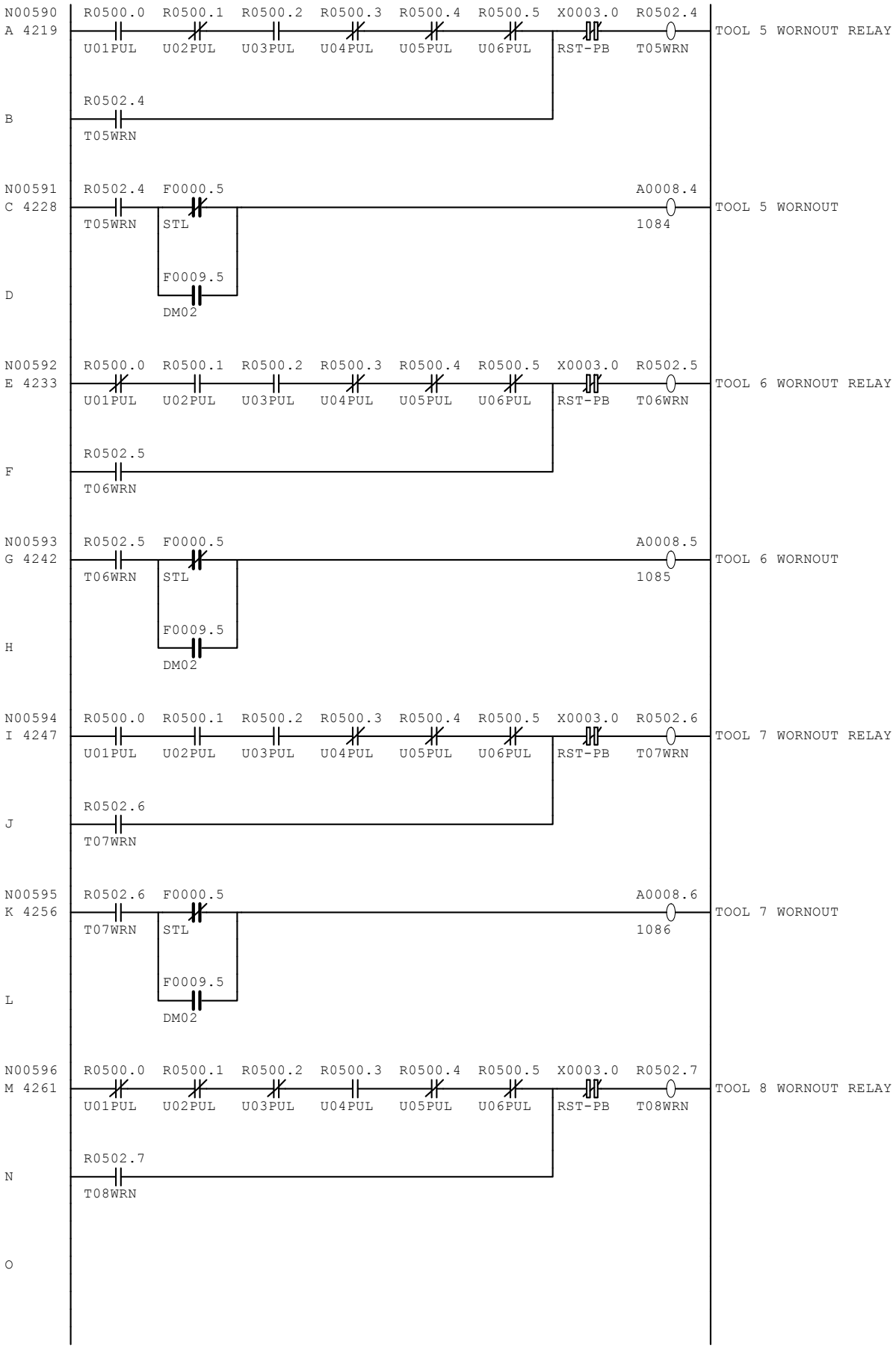
N00590
A 4219
R0500.0
U01PUL
R0500.1
U02PUL
R0500.2
U03PUL
R0500.3
U04PUL
R0500.4
U05PUL
R0500.5
U06PUL
X0003.0
RST-PB
R0502.4
T05WRN
TOOL 5 WORNOUT RELAY
B
R0502.4
T05WRN
N00591
C 4228
R0502.4
T05WRN
F0000.5
STL
A0008.4
1084
TOOL 5 WORNOUT
D
F0009.5
DM02
N00592
E 4233
R0500.0
U01PUL
R0500.1
U02PUL
R0500.2
U03PUL
R0500.3
U04PUL
R0500.4
U05PUL
R0500.5
U06PUL
X0003.0
RST-PB
R0502.5
T06WRN
TOOL 6 WORNOUT RELAY
F
R0502.5
T06WRN
N00593
G 4242
R0502.5
T06WRN
F0000.5
STL
A0008.5
1085
TOOL 6 WORNOUT
H
F0009.5
DM02
N00594
I 4247
R0500.0
U01PUL
R0500.1
U02PUL
R0500.2
U03PUL
R0500.3
U04PUL
R0500.4
U05PUL
R0500.5
U06PUL
X0003.0
RST-PB
R0502.6
T07WRN
TOOL 7 WORNOUT RELAY
J
R0502.6
T07WRN
N00595
K 4256
R0502.6
T07WRN
F0000.5
STL
A0008.6
1086
TOOL 7 WORNOUT
L
F0009.5
DM02
N00596
M 4261
R0500.0
U01PUL
R0500.1
U02PUL
R0500.2
U03PUL
R0500.3
U04PUL
R0500.4
U05PUL
R0500.5
U06PUL
X0003.0
RST-PB
R0502.7
T08WRN
TOOL 8 WORNOUT RELAY
N
R0502.7
T08WRN
O

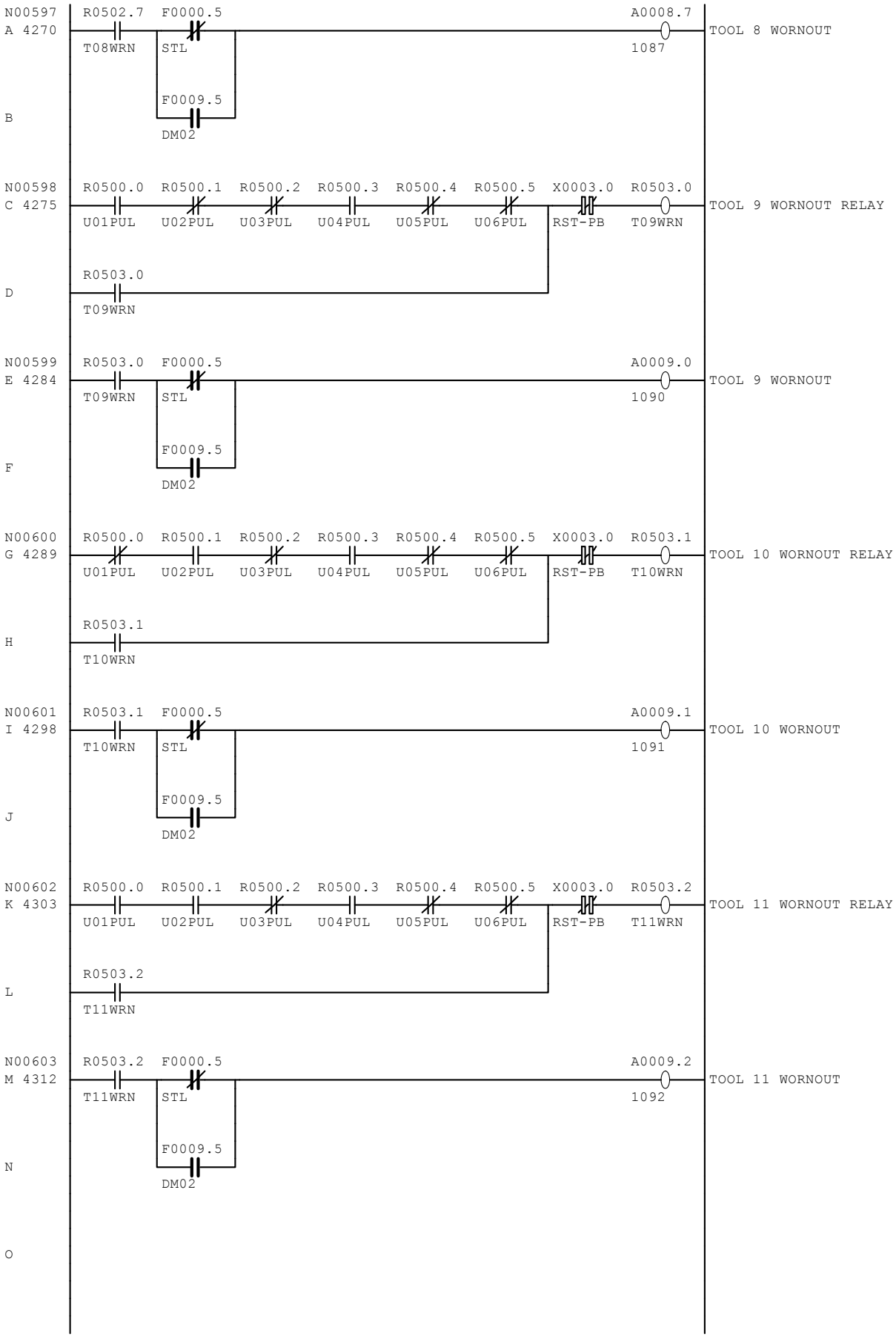
N00597
A 4270
R0502.7
T08WRN
F0000.5
STL
F0009.5
DM02
A0008.7
1087
TOOL 8 WORNOUT
B
N00598
C 4275
R0500.0
U01PUL
R0500.1
U02PUL
R0500.2
U03PUL
R0500.3
U04PUL
R0500.4
U05PUL
R0500.5
U06PUL
X0003.0
RST-PB
R0503.0
T09WRN
TOOL 9 WORNOUT RELAY
R0503.0
T09WRN
D
N00599
E 4284
R0503.0
T09WRN
F0000.5
STL
F0009.5
DM02
A0009.0
1090
TOOL 9 WORNOUT
F
N00600
G 4289
R0500.0
U01PUL
R0500.1
U02PUL
R0500.2
U03PUL
R0500.3
U04PUL
R0500.4
U05PUL
R0500.5
U06PUL
X0003.0
RST-PB
R0503.1
T10WRN
TOOL 10 WORNOUT RELAY
R0503.1
T10WRN
H
N00601
I 4298
R0503.1
T10WRN
F0000.5
STL
F0009.5
DM02
A0009.1
1091
TOOL 10 WORNOUT
J
N00602
K 4303
R0500.0
U01PUL
R0500.1
U02PUL
R0500.2
U03PUL
R0500.3
U04PUL
R0500.4
U05PUL
R0500.5
U06PUL
X0003.0
RST-PB
R0503.2
T11WRN
TOOL 11 WORNOUT RELAY
R0503.2
T11WRN
L
N00603
M 4312
R0503.2
T11WRN
F0000.5
STL
F0009.5
DM02
A0009.2
1092
TOOL 11 WORNOUT
N
O

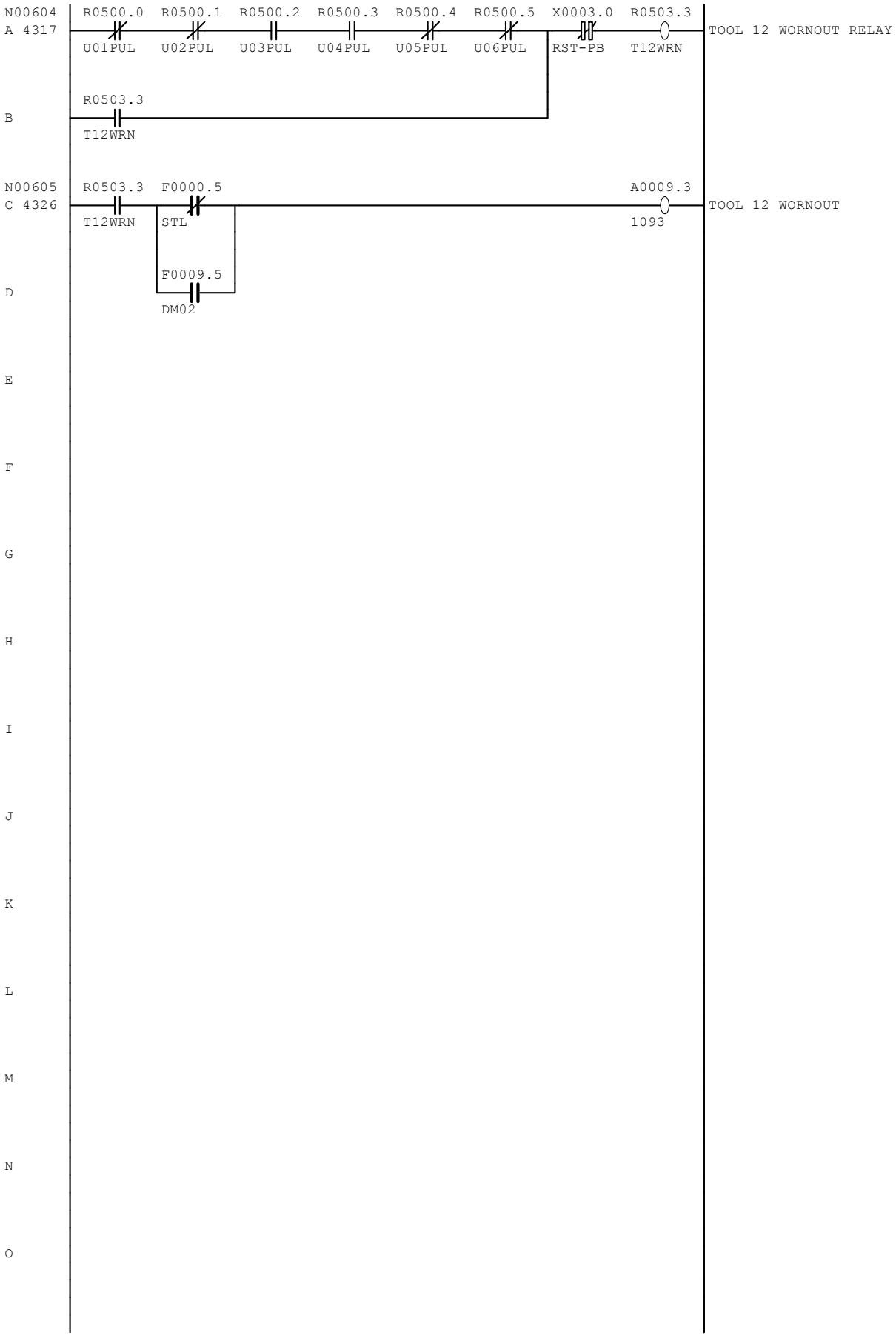
N00604
A 4317
R0500.0
U01PUL
R0500.1
U02PUL
R0500.2
U03PUL
R0500.3
U04PUL
R0500.4
U05PUL
R0500.5
U06PUL
X0003.0
RST-PB
R0503.3
T12WRN
TOOL 12 WORNOUT RELAY
B
R0503.3
T12WRN
N00605
C 4326
R0503.3
T12WRN
F0000.5
STL
A0009.3
1093
TOOL 12 WORNOUT
D
F0009.5
DM02
E
F
G
H
I
J
K
L
M
N
O

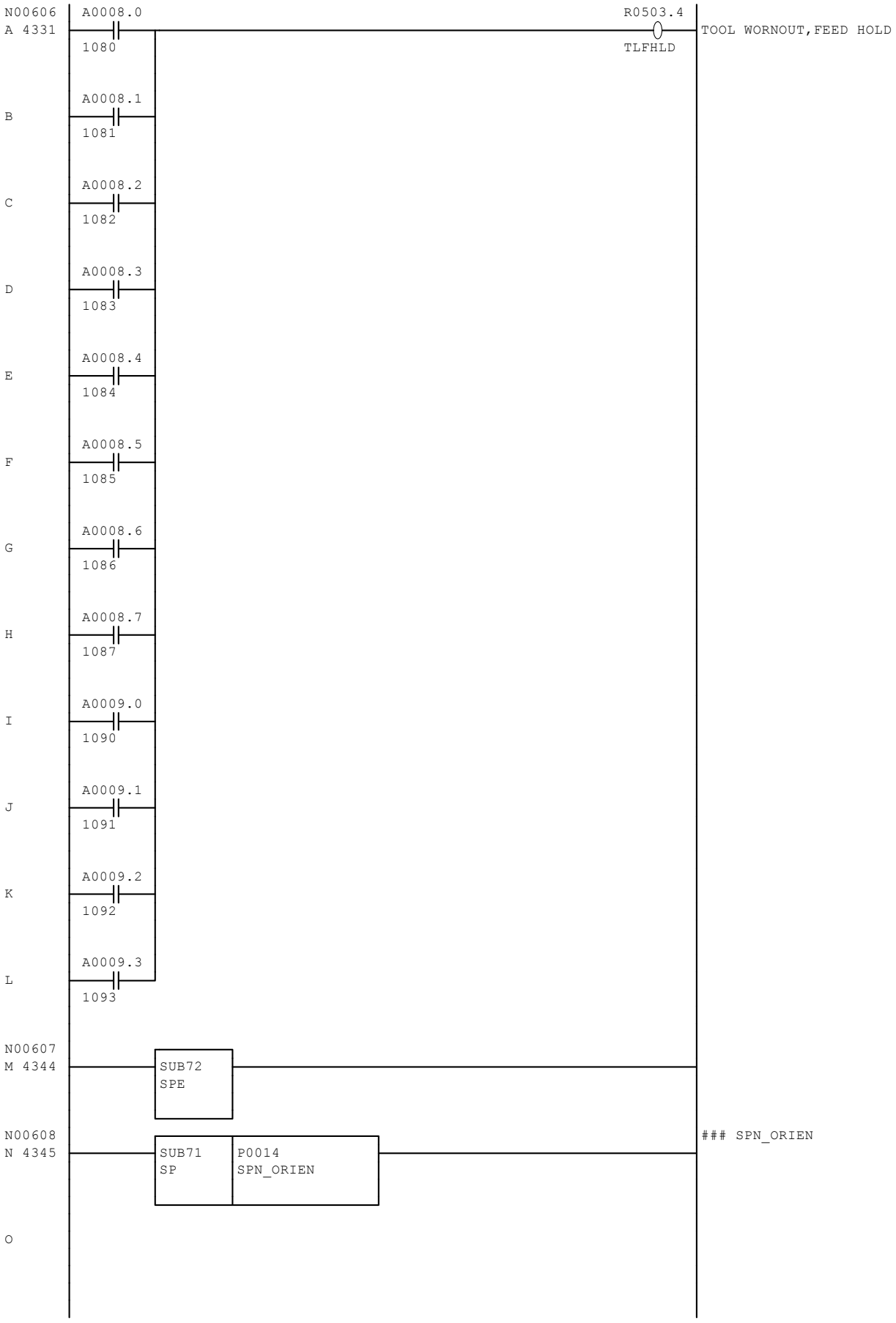
N00606
A 4331
A0008.0
1080
R0503.4
TLFHLD
TOOL WORNOUT,FEED HOLD
B
A0008.1
1081
C
A0008.2
1082
D
A0008.3
1083
E
A0008.4
1084
F
A0008.5
1085
G
A0008.6
1086
H
A0008.7
1087
I
A0009.0
1090
J
A0009.1
1091
K
A0009.2
1092
L
A0009.3
1093
N00607
M 4344
SUB72
SPE
N00608
N 4345
SUB71
SP
P0014
SPN_ORIEN
SPN_ORIEN
O

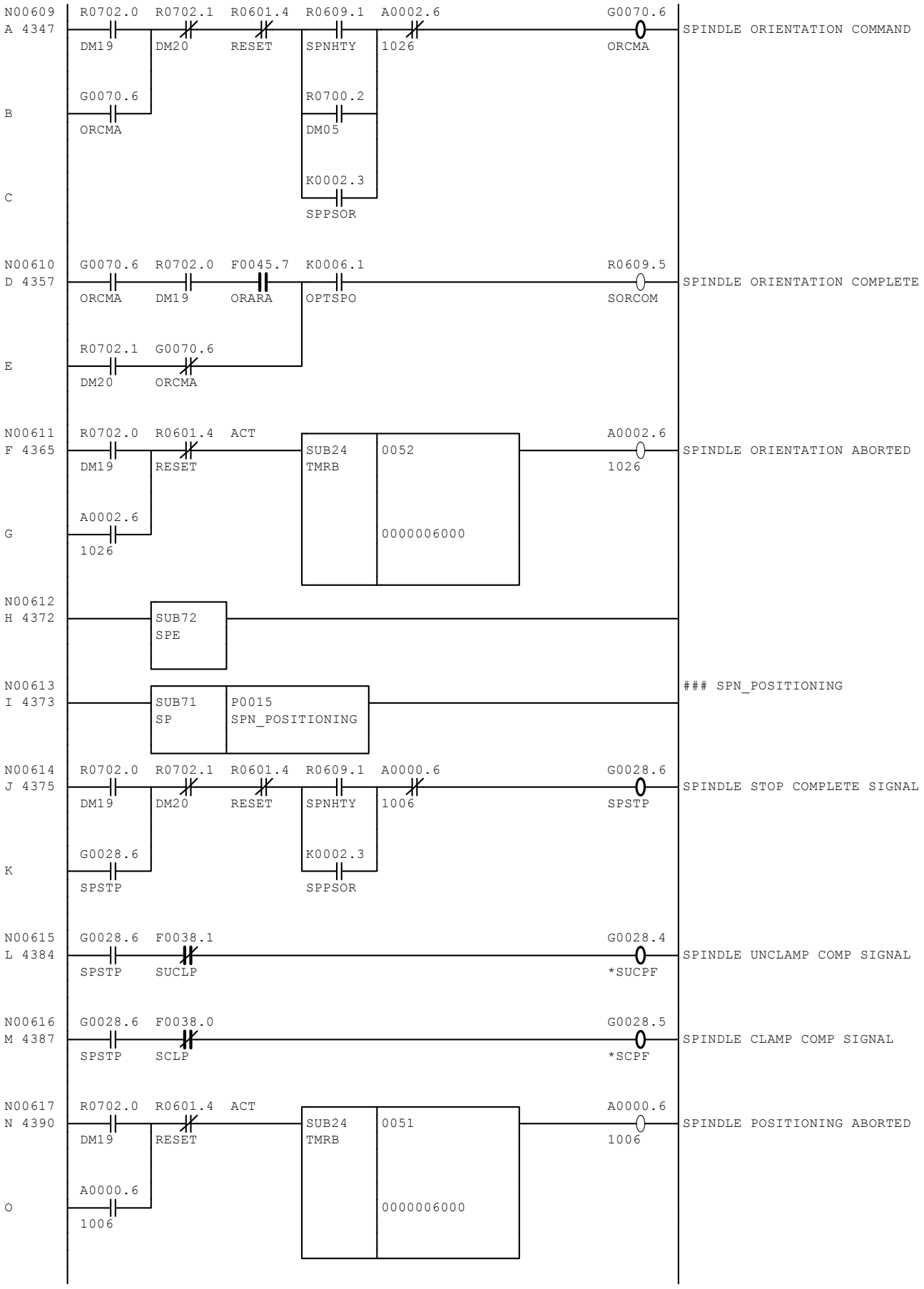
N00609
A 4347
R0702.0
DM19
R0702.1
DM20
R0601.4
RESET
R0609.1
SPNHTY
A0002.6
1026
G0070.6
ORCMA
SPINDLE ORIENTATION COMMAND
B
G0070.6
ORCMA
R0700.2
DM05
C
K0002.3
SPPSOR
N00610
D 4357
G0070.6
ORCMA
R0702.0
DM19
F0045.7
ORARA
K0006.1
OPTSPO
R0609.5
SORCOM
SPINDLE ORIENTATION COMPLETE
E
R0702.1
DM20
G0070.6
ORCMA
N00611
F 4365
R0702.0
DM19
R0601.4
RESET
ACT
SUB24
TMRB
0052
0000006000
A0002.6
1026
SPINDLE ORIENTATION ABORTED
G
A0002.6
1026
N00612
H 4372
SUB72
SPE
N00613
I 4373
SUB71
SP
P0015
SPN_POSITIONING
SPN_POSITIONING
N00614
J 4375
R0702.0
DM19
R0702.1
DM20
R0601.4
RESET
R0609.1
SPNHTY
A0000.6
1006
G0028.6
SPSTP
SPINDLE STOP COMPLETE SIGNAL
K
G0028.6
SPSTP
K0002.3
SPPSOR
N00615
L 4384
G0028.6
SPSTP
F0038.1
SUCLP
G0028.4
*SUCPF
SPINDLE UNCLAMP COMP SIGNAL
N00616
M 4387
G0028.6
SPSTP
F0038.0
SCLP
G0028.5
*SCPF
SPINDLE CLAMP COMP SIGNAL
N00617
N 4390
R0702.0
DM19
R0601.4
RESET
ACT
SUB24
TMRB
0051
0000006000
A0000.6
1006
SPINDLE POSITIONING ABORTED
O
A0000.6
1006

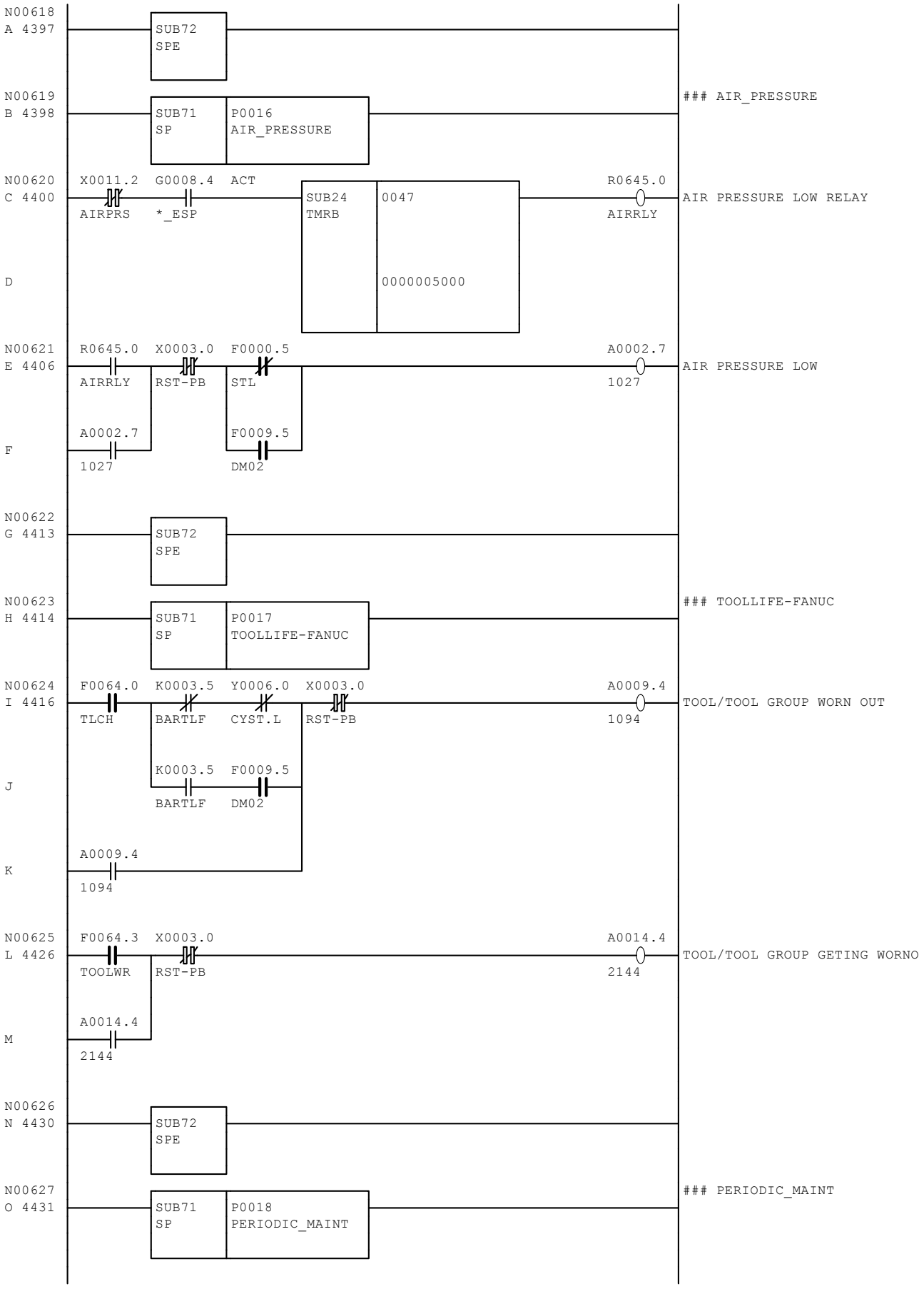
N00618
A 4397
SUB72
SPE
N00619
B 4398
SUB71
SP
P0016
AIR_PRESSURE
AIR_PRESSURE
N00620
C 4400
X0011.2
AIRPRS
G0008.4
*_ESP
ACT
SUB24
TMRB
0047
0000005000
D
R0645.0
AIRRLY
AIR PRESSURE LOW RELAY
N00621
E 4406
R0645.0
AIRRLY
X0003.0
RST-PB
F0000.5
STL
A0002.7
1027
AIR PRESSURE LOW
F
A0002.7
1027
F0009.5
DM02
N00622
G 4413
SUB72
SPE
N00623
H 4414
SUB71
SP
P0017
TOOLLIFE-FANUC
TOOLLIFE-FANUC
N00624
I 4416
F0064.0
TLCH
K0003.5
BARTLF
Y0006.0
CYST.L
X0003.0
RST-PB
A0009.4
1094
TOOL/TOOL GROUP WORN OUT
J
K0003.5
BARTLF
F0009.5
DM02
K
A0009.4
1094
N00625
L 4426
F0064.3
TOOLWR
X0003.0
RST-PB
A0014.4
2144
TOOL/TOOL GROUP GETING WORNO
M
A0014.4
2144
N00626
N 4430
SUB72
SPE
N00627
O 4431
SUB71
SP
P0018
PERIODIC_MAINT
PERIODIC_MAINT

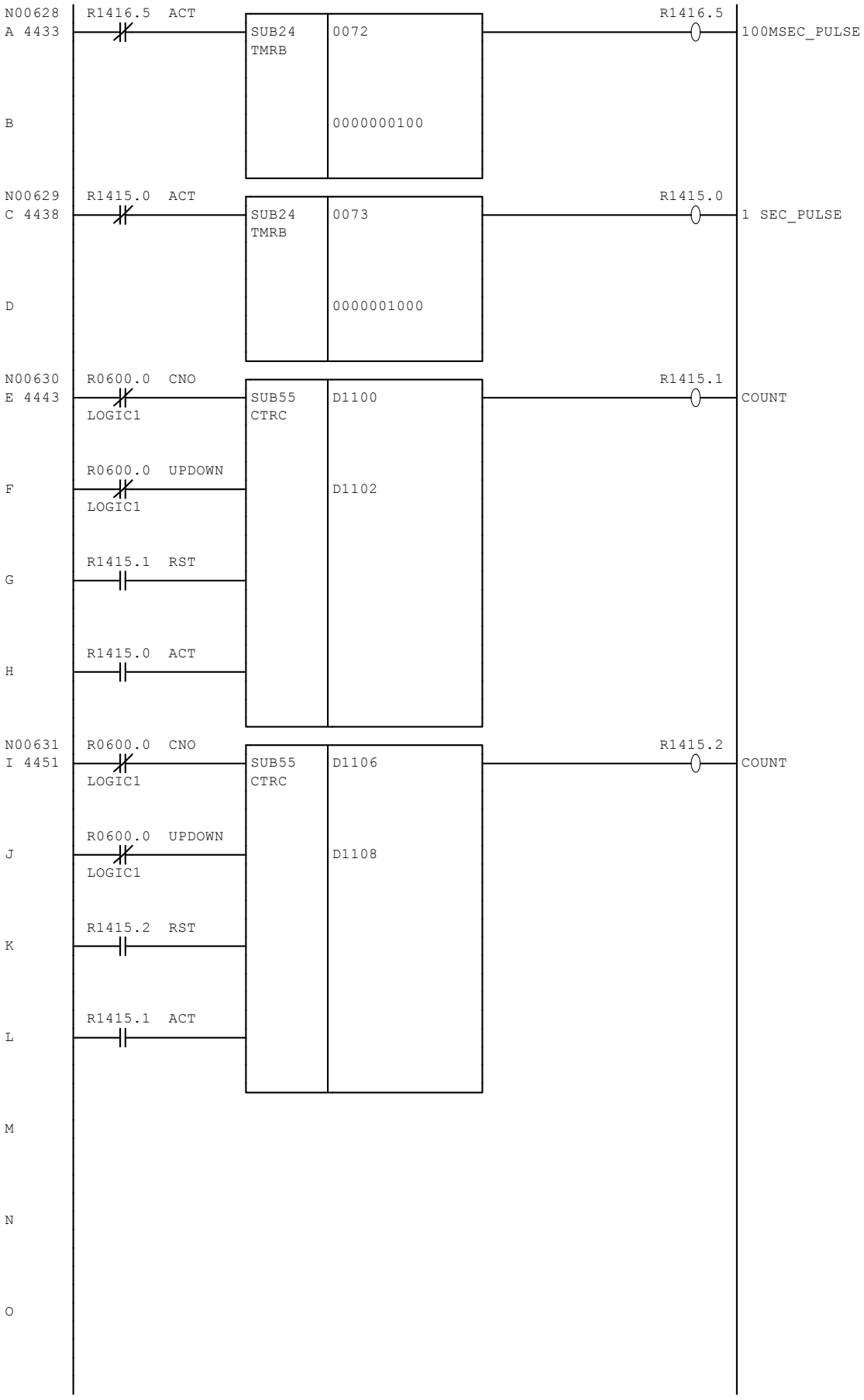
N00628
A 4433
R1416.5 ACT
SUB24
TMRB
0072
0000000100
R1416.5
100MSEC_PULSE
B
N00629
C 4438
R1415.0 ACT
SUB24
TMRB
0073
0000001000
R1415.0
1 SEC_PULSE
D
N00630
E 4443
R0600.0 CNO
LOGIC1
SUB55
CTRC
D1100
D1102
R1415.1
COUNT
F
R0600.0 UPDOWN
LOGIC1
G
R1415.1 RST
H
R1415.0 ACT
N00631
I 4451
R0600.0 CNO
LOGIC1
SUB55
CTRC
D1106
D1108
R1415.2
COUNT
J
R0600.0 UPDOWN
LOGIC1
K
R1415.2 RST
L
R1415.1 ACT
M
N
O

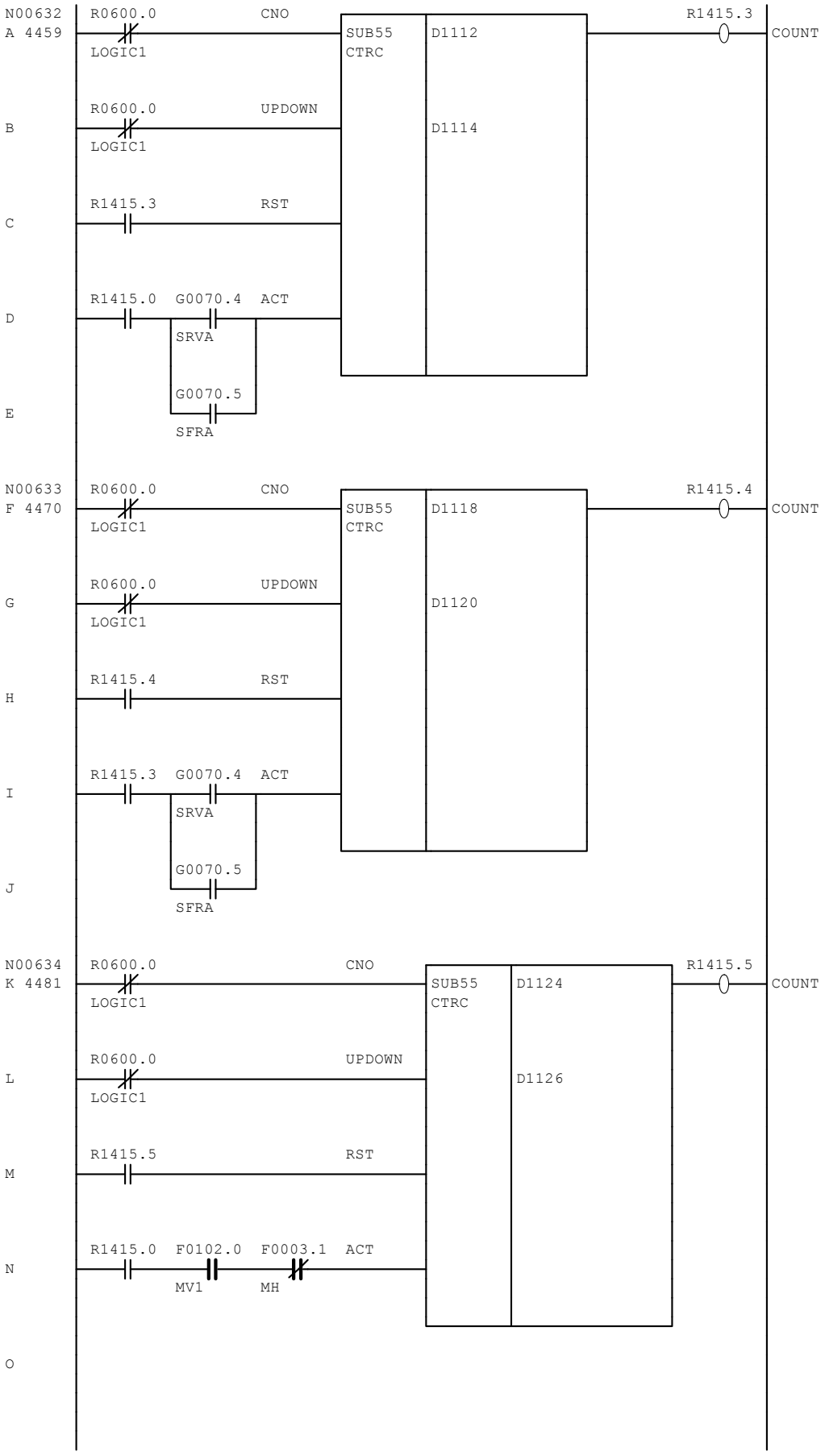
N00632
A 4459
R0600.0
LOGIC1
CNO
SUB55
CTRC
D1112
R1415.3
COUNT
B
R0600.0
LOGIC1
UPDOWN
D1114
C
R1415.3
RST
D
R1415.0
G0070.4
ACT
SRVA
E
G0070.5
SFRA
N00633
F 4470
R0600.0
LOGIC1
CNO
SUB55
CTRC
D1118
R1415.4
COUNT
G
R0600.0
LOGIC1
UPDOWN
D1120
H
R1415.4
RST
I
R1415.3
G0070.4
ACT
SRVA
J
G0070.5
SFRA
N00634
K 4481
R0600.0
LOGIC1
CNO
SUB55
CTRC
D1124
R1415.5
COUNT
L
R0600.0
LOGIC1
UPDOWN
D1126
M
R1415.5
RST
N
R1415.0
F0102.0
MV1
F0003.1
MH
ACT
O

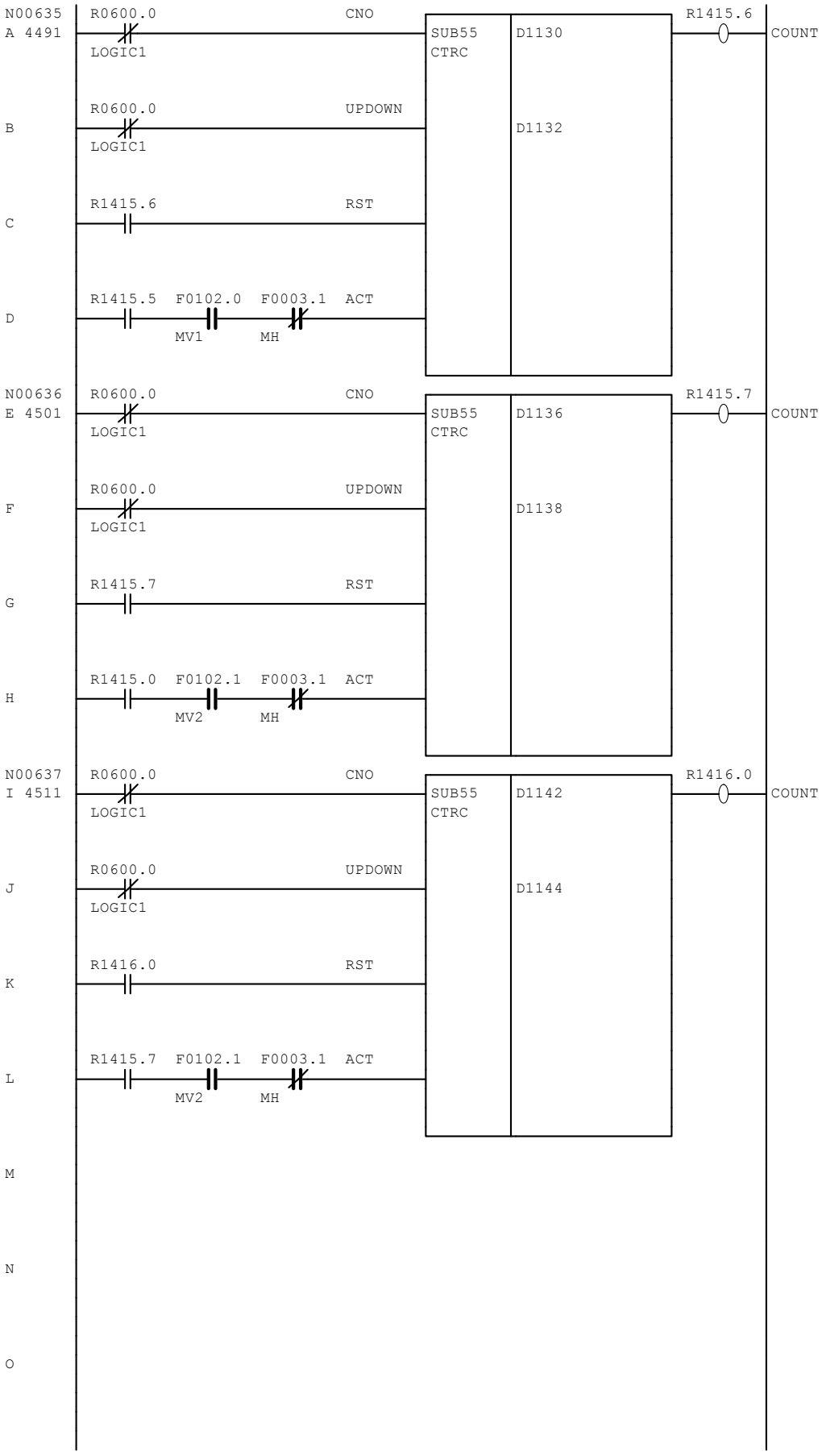
N00635
A 4491
R0600.0
LOGIC1
CNO
SUB55
CTRC
D1130
R1415.6
COUNT
B
R0600.0
LOGIC1
UPDOWN
D1132
C
R1415.6
RST
D
R1415.5
MV1
F0102.0
F0003.1
MH
ACT
N00636
E 4501
R0600.0
LOGIC1
CNO
SUB55
CTRC
D1136
R1415.7
COUNT
F
R0600.0
LOGIC1
UPDOWN
D1138
G
R1415.7
RST
H
R1415.0
MV2
F0102.1
F0003.1
MH
ACT
N00637
I 4511
R0600.0
LOGIC1
CNO
SUB55
CTRC
D1142
R1416.0
COUNT
J
R0600.0
LOGIC1
UPDOWN
D1144
K
R1416.0
RST
L
R1415.7
MV2
F0102.1
F0003.1
MH
ACT
M
N
O

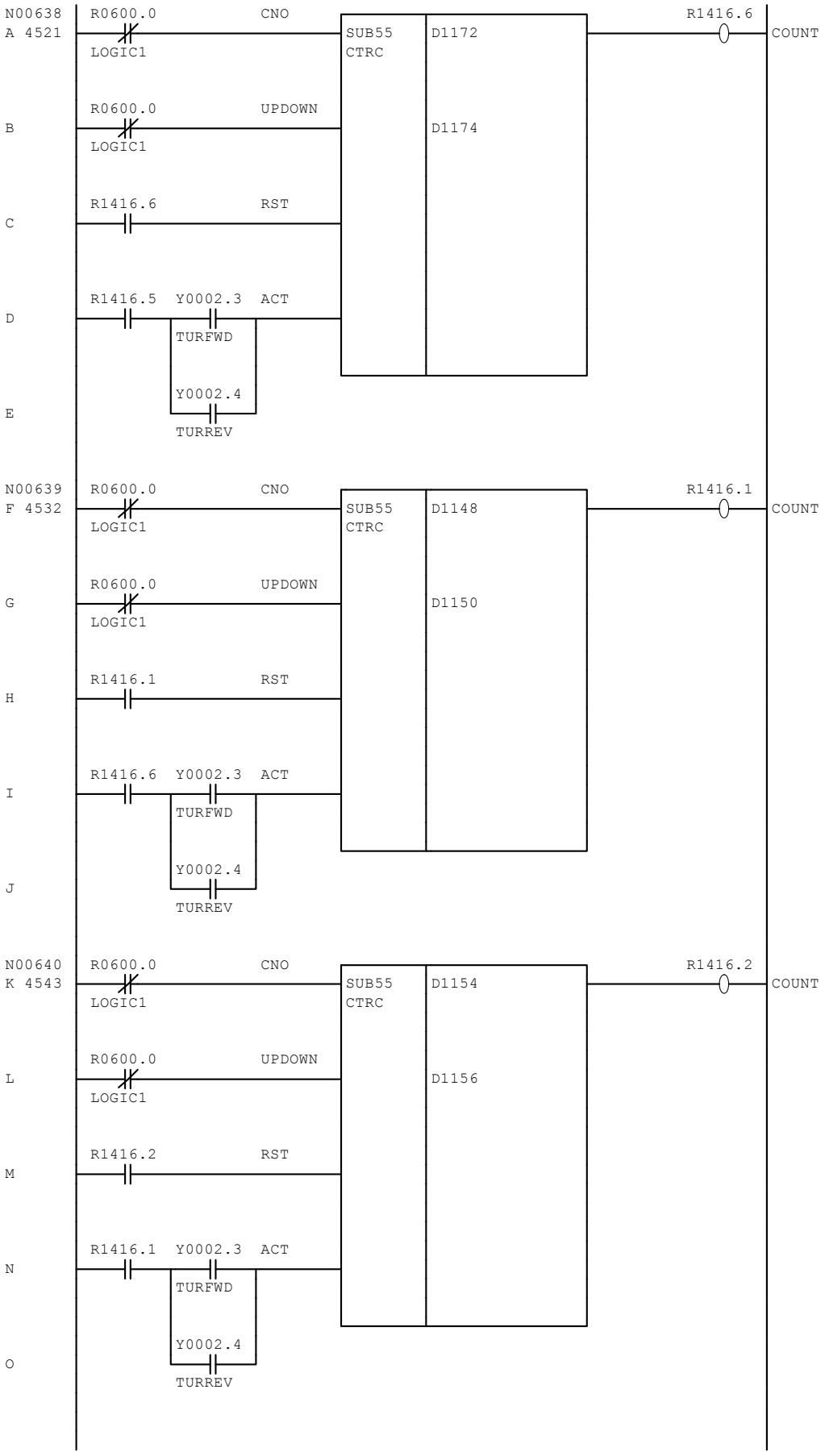
N00638
A 4521
R0600.0
LOGIC1
CNO
SUB55
CTRC
D1172
R1416.6
COUNT
B
R0600.0
LOGIC1
UPDOWN
D1174
C
R1416.6
RST
D
R1416.5
Y0002.3
TURFWD
ACT
E
Y0002.4
TURREV
N00639
F 4532
R0600.0
LOGIC1
CNO
SUB55
CTRC
D1148
R1416.1
COUNT
G
R0600.0
LOGIC1
UPDOWN
D1150
H
R1416.1
RST
I
R1416.6
Y0002.3
TURFWD
ACT
J
Y0002.4
TURREV
N00640
K 4543
R0600.0
LOGIC1
CNO
SUB55
CTRC
D1154
R1416.2
COUNT
L
R0600.0
LOGIC1
UPDOWN
D1156
M
R1416.2
RST
N
R1416.1
Y0002.3
TURFWD
ACT
O
Y0002.4
TURREV

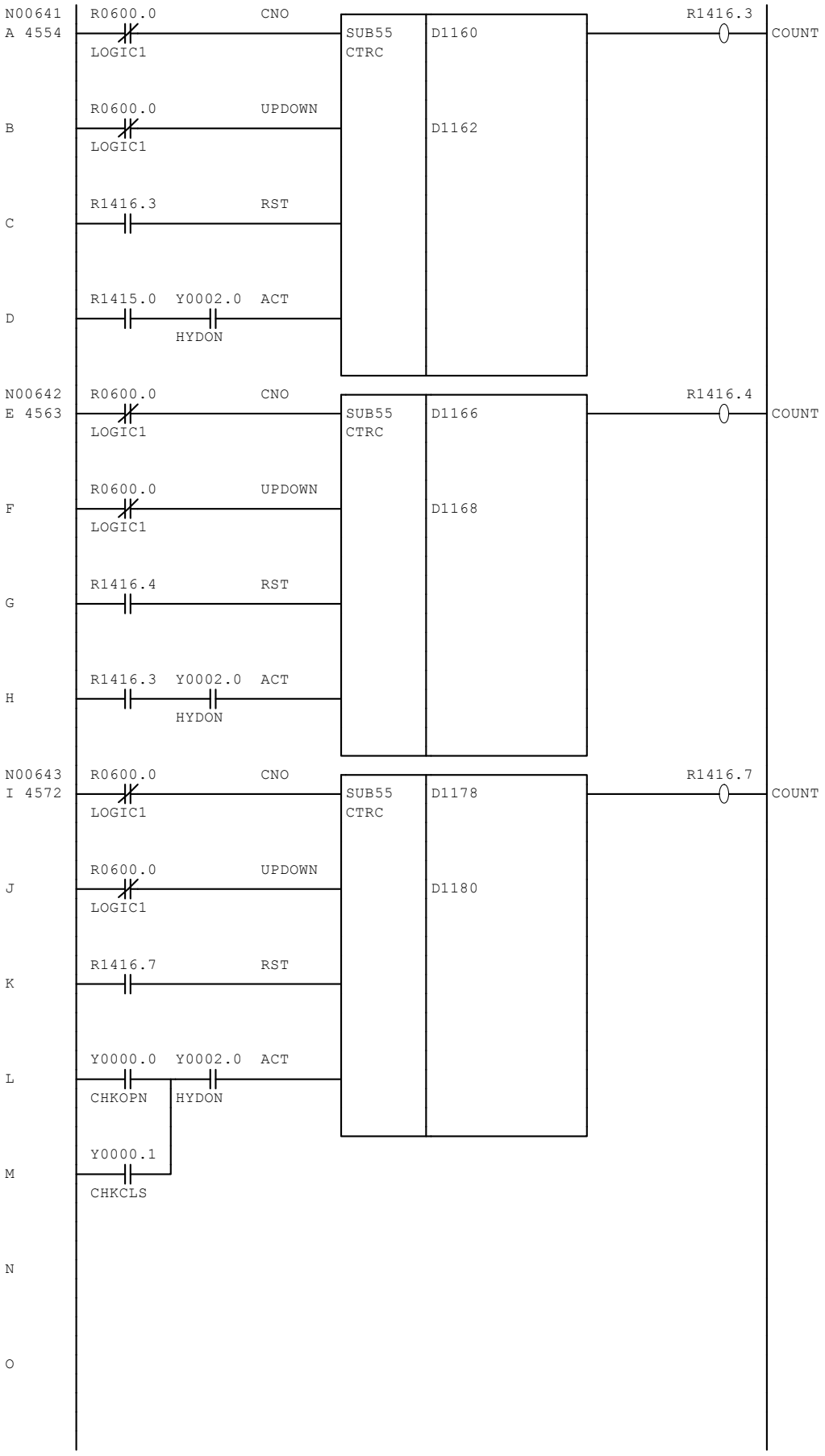
N00641
A 4554
R0600.0
LOGIC1
CNO
SUB55
CTRC
D1160
R1416.3
COUNT
B
R0600.0
LOGIC1
UPDOWN
D1162
C
R1416.3
RST
D
R1415.0
Y0002.0
HYDON
ACT
N00642
E 4563
R0600.0
LOGIC1
CNO
SUB55
CTRC
D1166
R1416.4
COUNT
F
R0600.0
LOGIC1
UPDOWN
D1168
G
R1416.4
RST
H
R1416.3
Y0002.0
HYDON
ACT
N00643
I 4572
R0600.0
LOGIC1
CNO
SUB55
CTRC
D1178
R1416.7
COUNT
J
R0600.0
LOGIC1
UPDOWN
D1180
K
R1416.7
RST
L
Y0000.0
CHKOPN
Y0002.0
HYDON
ACT
M
Y0000.1
CHKCLS
N
O

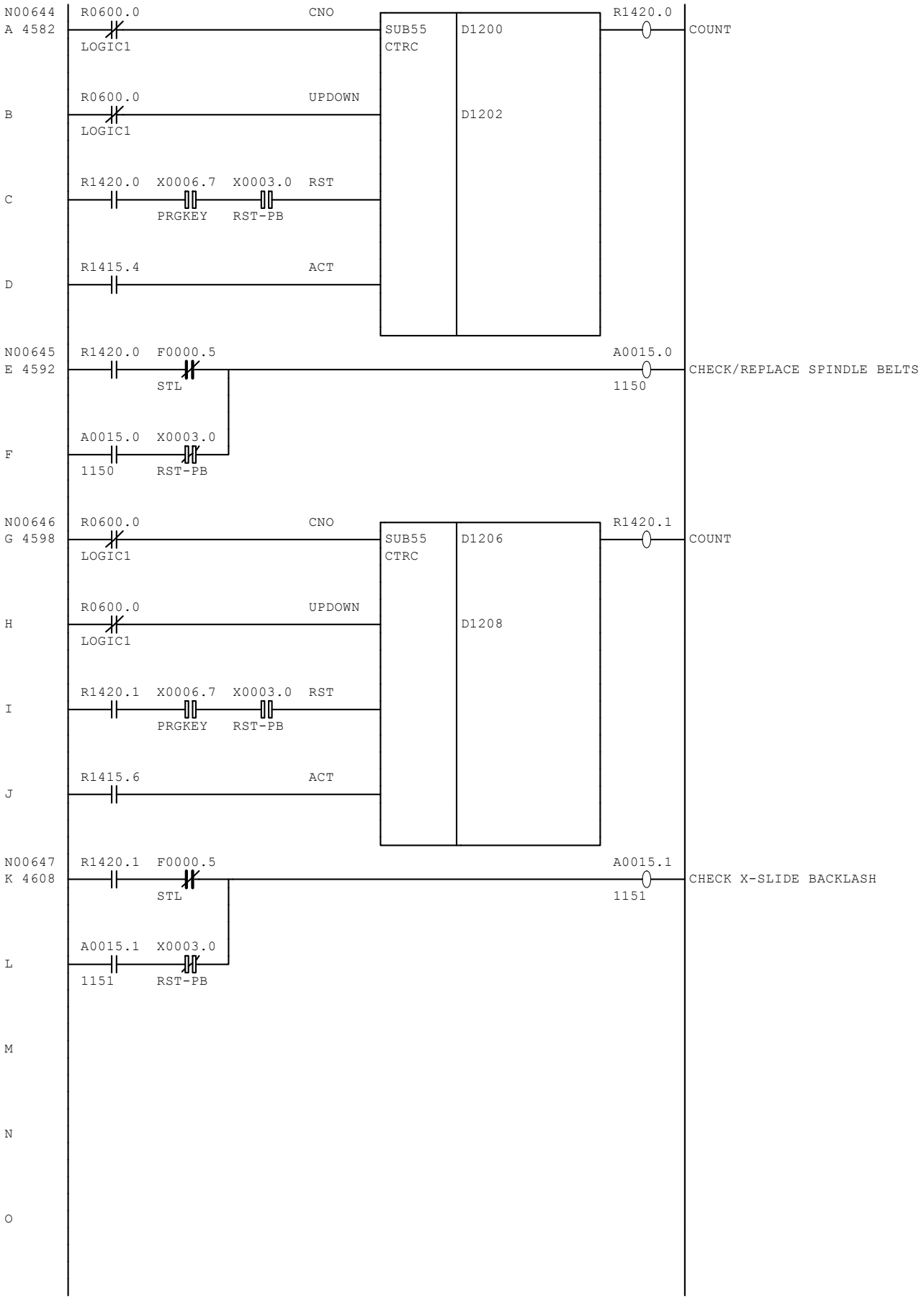
N00644
A 4582
R0600.0
LOGIC1
CNO
SUB55
CTRC
D1200
D1202
R1420.0
COUNT
B
R0600.0
LOGIC1
UPDOWN
C
R1420.0
X0006.7
PRGKEY
X0003.0
RST-PB
RST
D
R1415.4
ACT
N00645
E 4592
R1420.0
F0000.5
STL
A0015.0
1150
CHECK/REPLACE SPINDLE BELTS
F
A0015.0
1150
X0003.0
RST-PB
N00646
G 4598
R0600.0
LOGIC1
CNO
SUB55
CTRC
D1206
D1208
R1420.1
COUNT
H
R0600.0
LOGIC1
UPDOWN
I
R1420.1
X0006.7
PRGKEY
X0003.0
RST-PB
RST
J
R1415.6
ACT
N00647
K 4608
R1420.1
F0000.5
STL
A0015.1
1151
CHECK X-SLIDE BACKLASH
L
A0015.1
1151
X0003.0
RST-PB
M
N
O

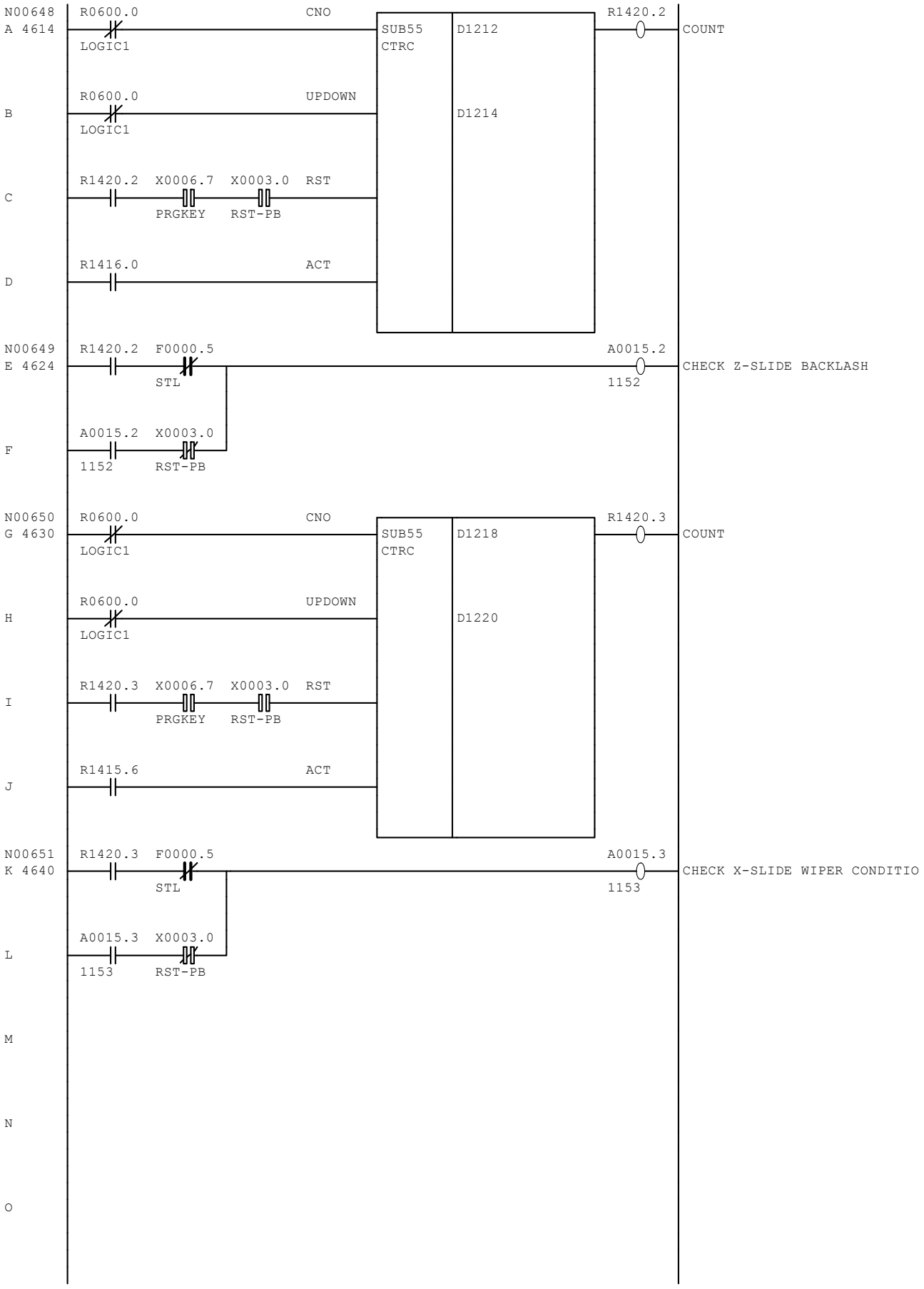
N00648
A 4614
R0600.0
LOGIC1
CNO
SUB55
CTRC
D1212
D1214
R1420.2
COUNT
B
R0600.0
LOGIC1
UPDOWN
C
R1420.2
X0006.7
PRGKEY
X0003.0
RST-PB
RST
D
R1416.0
ACT
N00649
E 4624
R1420.2
F0000.5
STL
A0015.2
1152
CHECK Z-SLIDE BACKLASH
F
A0015.2
1152
X0003.0
RST-PB
N00650
G 4630
R0600.0
LOGIC1
CNO
SUB55
CTRC
D1218
D1220
R1420.3
COUNT
H
R0600.0
LOGIC1
UPDOWN
I
R1420.3
X0006.7
PRGKEY
X0003.0
RST-PB
RST
J
R1415.6
ACT
N00651
K 4640
R1420.3
F0000.5
STL
A0015.3
1153
CHECK X-SLIDE WIPER CONDITIO
L
A0015.3
1153
X0003.0
RST-PB
M
N
O

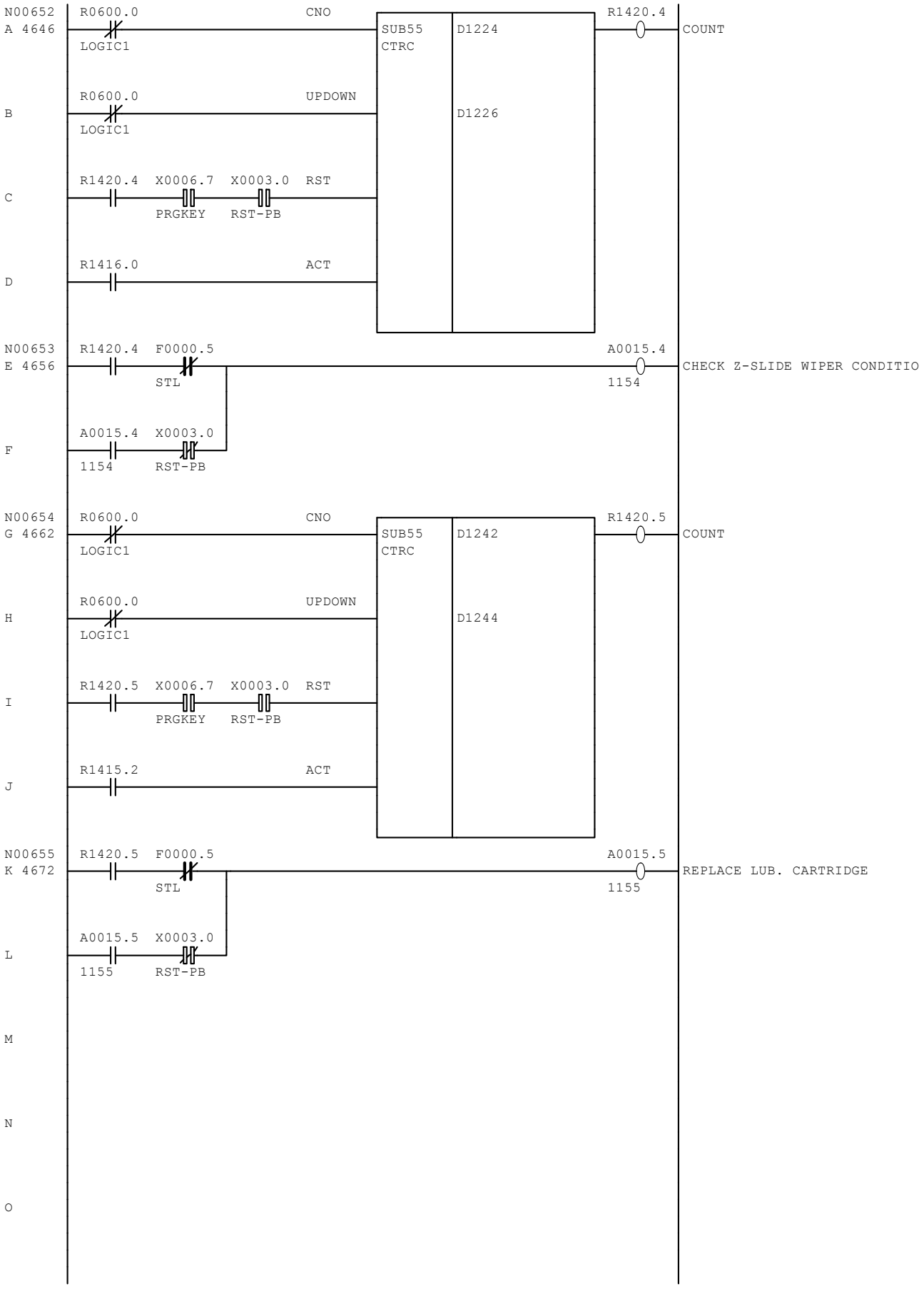
N00652
A 4646
R0600.0
LOGIC1
CNO
SUB55
CTRC
D1224
D1226
R1420.4
COUNT
B
R0600.0
LOGIC1
UPDOWN
C
R1420.4
X0006.7
PRGKEY
X0003.0
RST-PB
RST
D
R1416.0
ACT
N00653
E 4656
R1420.4
F0000.5
STL
A0015.4
1154
CHECK Z-SLIDE WIPER CONDITIO
F
A0015.4
1154
X0003.0
RST-PB
N00654
G 4662
R0600.0
LOGIC1
CNO
SUB55
CTRC
D1242
D1244
R1420.5
COUNT
H
R0600.0
LOGIC1
UPDOWN
I
R1420.5
X0006.7
PRGKEY
X0003.0
RST-PB
RST
J
R1415.2
ACT
N00655
K 4672
R1420.5
F0000.5
STL
A0015.5
1155
REPLACE LUB. CARTRIDGE
L
A0015.5
1155
X0003.0
RST-PB
M
N
O

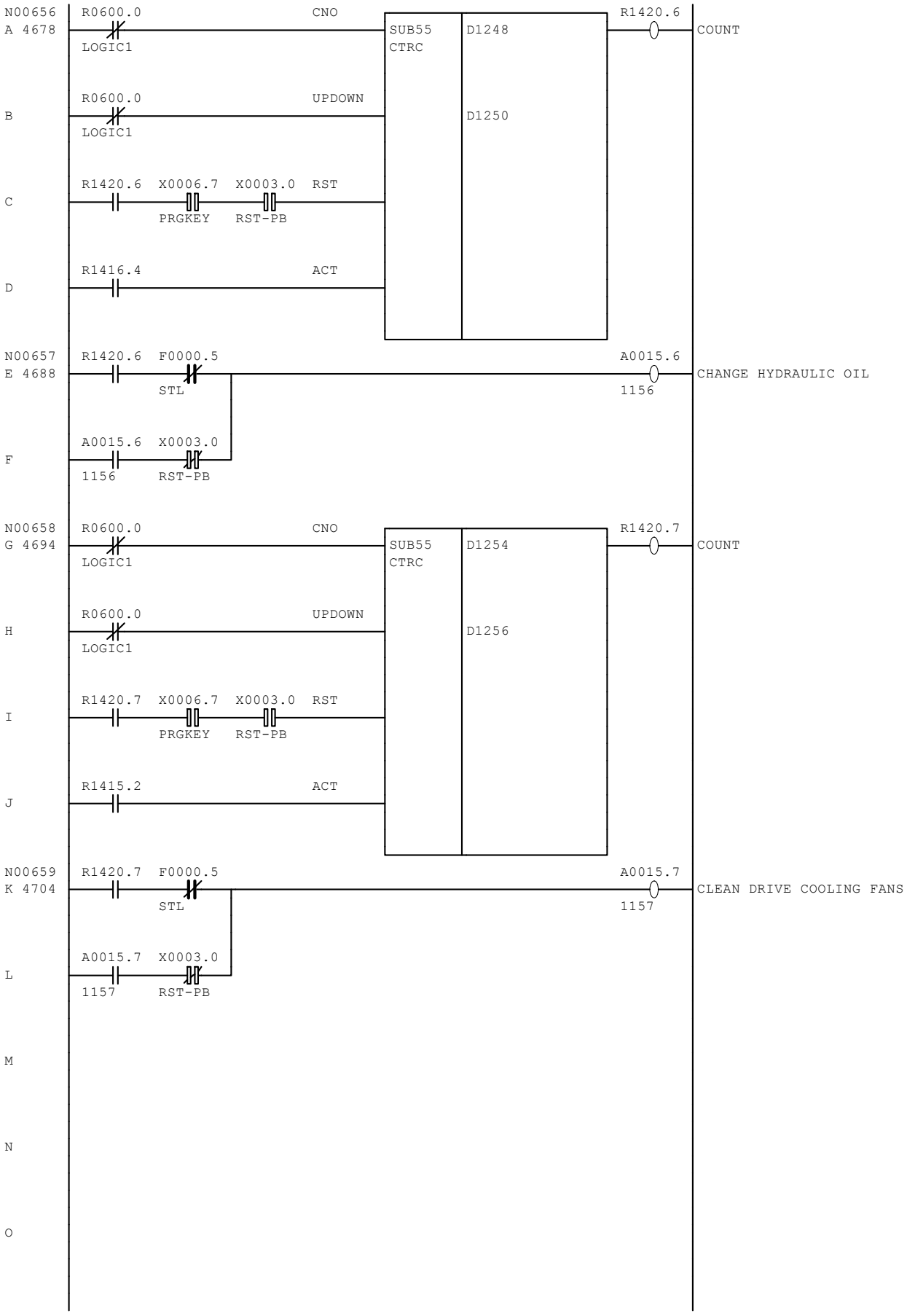
N00656
A 4678
R0600.0
LOGIC1
CNO
SUB55
CTRC
D1248
D1250
R1420.6
COUNT
B
R0600.0
LOGIC1
UPDOWN
C
R1420.6
X0006.7
PRGKEY
X0003.0
RST-PB
RST
D
R1416.4
ACT
N00657
E 4688
R1420.6
F0000.5
STL
A0015.6
1156
CHANGE HYDRAULIC OIL
F
A0015.6
1156
X0003.0
RST-PB
N00658
G 4694
R0600.0
LOGIC1
CNO
SUB55
CTRC
D1254
D1256
R1420.7
COUNT
H
R0600.0
LOGIC1
UPDOWN
I
R1420.7
X0006.7
PRGKEY
X0003.0
RST-PB
RST
J
R1415.2
ACT
N00659
K 4704
R1420.7
F0000.5
STL
A0015.7
1157
CLEAN DRIVE COOLING FANS
L
A0015.7
1157
X0003.0
RST-PB
M
N
O

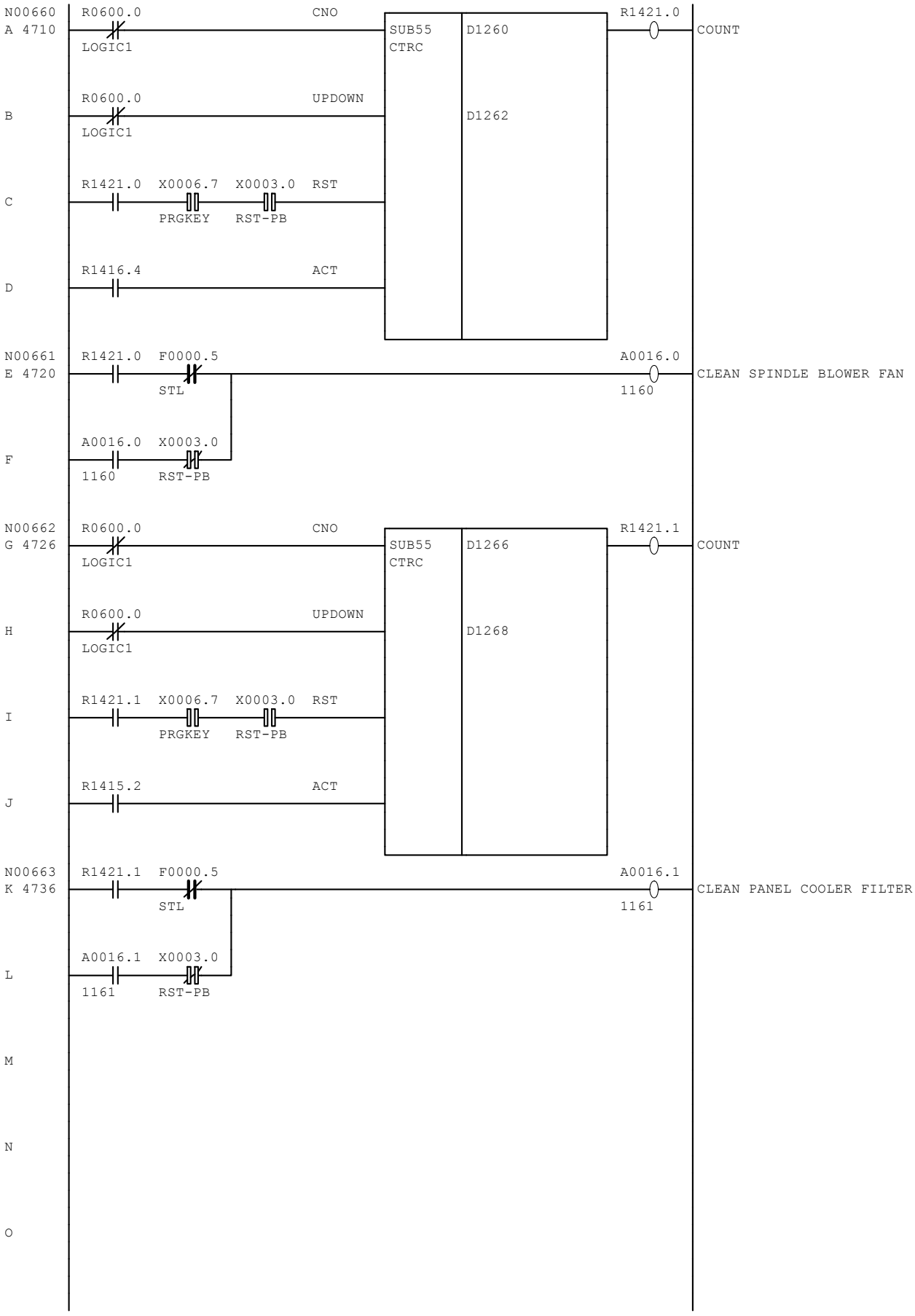
N00660
A 4710
R0600.0
LOGIC1
CNO
SUB55
CTRC
D1260
D1262
R1421.0
COUNT
B
R0600.0
LOGIC1
UPDOWN
C
R1421.0
X0006.7
PRGKEY
X0003.0
RST-PB
RST
D
R1416.4
ACT
N00661
E 4720
R1421.0
F0000.5
STL
A0016.0
1160
CLEAN SPINDLE BLOWER FAN
F
A0016.0
1160
X0003.0
RST-PB
N00662
G 4726
R0600.0
LOGIC1
CNO
SUB55
CTRC
D1266
D1268
R1421.1
COUNT
H
R0600.0
LOGIC1
UPDOWN
I
R1421.1
X0006.7
PRGKEY
X0003.0
RST-PB
RST
J
R1415.2
ACT
N00663
K 4736
R1421.1
F0000.5
STL
A0016.1
1161
CLEAN PANEL COOLER FILTER
L
A0016.1
1161
X0003.0
RST-PB
M
N
O

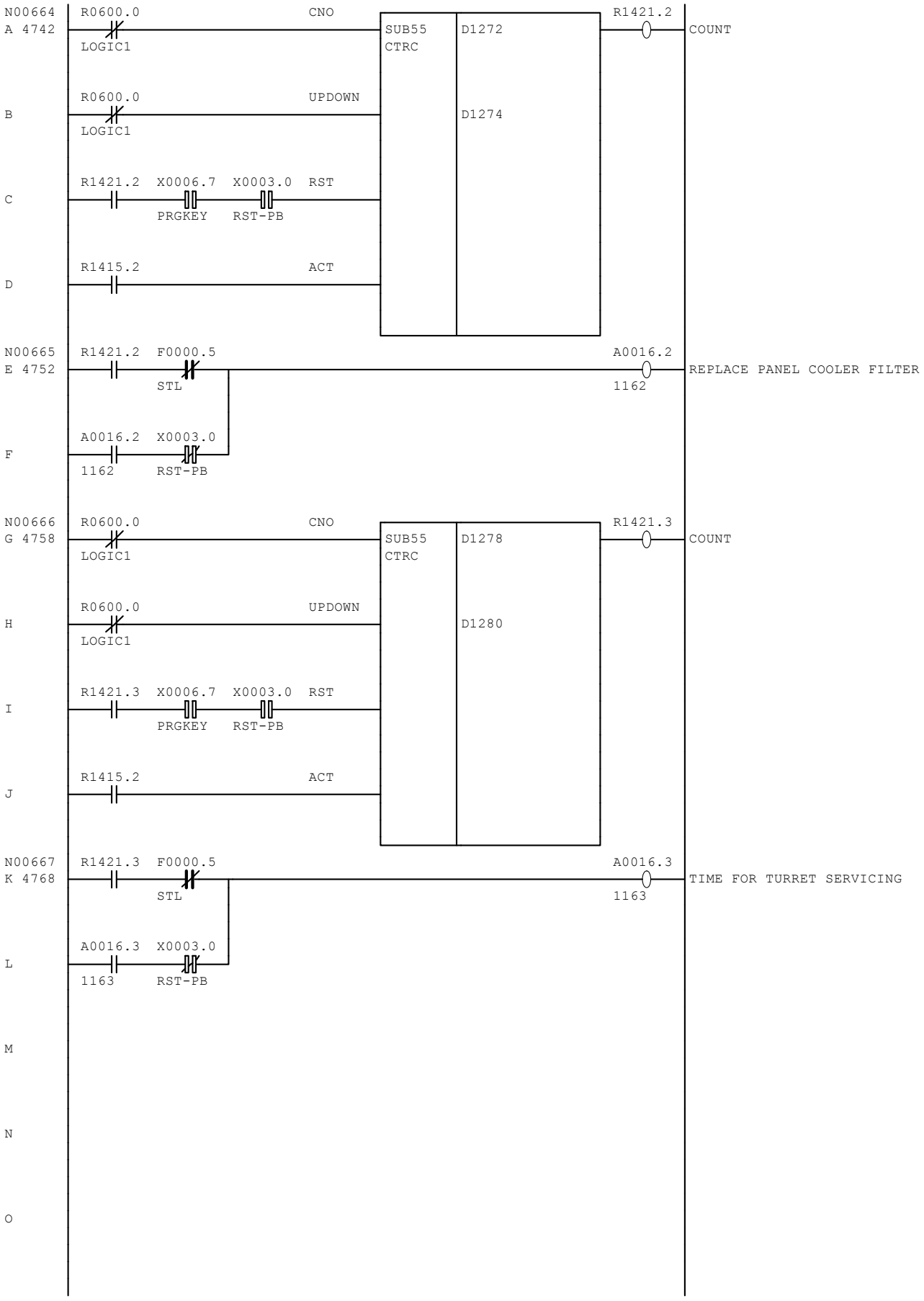
N00664
A 4742
R0600.0
LOGIC1
CNO
SUB55
CTRC
D1272
D1274
R1421.2
COUNT
B
R0600.0
LOGIC1
UPDOWN
C
R1421.2
X0006.7
PRGKEY
X0003.0
RST-PB
RST
D
R1415.2
ACT
N00665
E 4752
R1421.2
F0000.5
STL
A0016.2
1162
REPLACE PANEL COOLER FILTER
F
A0016.2
1162
X0003.0
RST-PB
N00666
G 4758
R0600.0
LOGIC1
CNO
SUB55
CTRC
D1278
D1280
R1421.3
COUNT
H
R0600.0
LOGIC1
UPDOWN
I
R1421.3
X0006.7
PRGKEY
X0003.0
RST-PB
RST
J
R1415.2
ACT
N00667
K 4768
R1421.3
F0000.5
STL
A0016.3
1163
TIME FOR TURRET SERVICING
L
A0016.3
1163
X0003.0
RST-PB
M
N
O

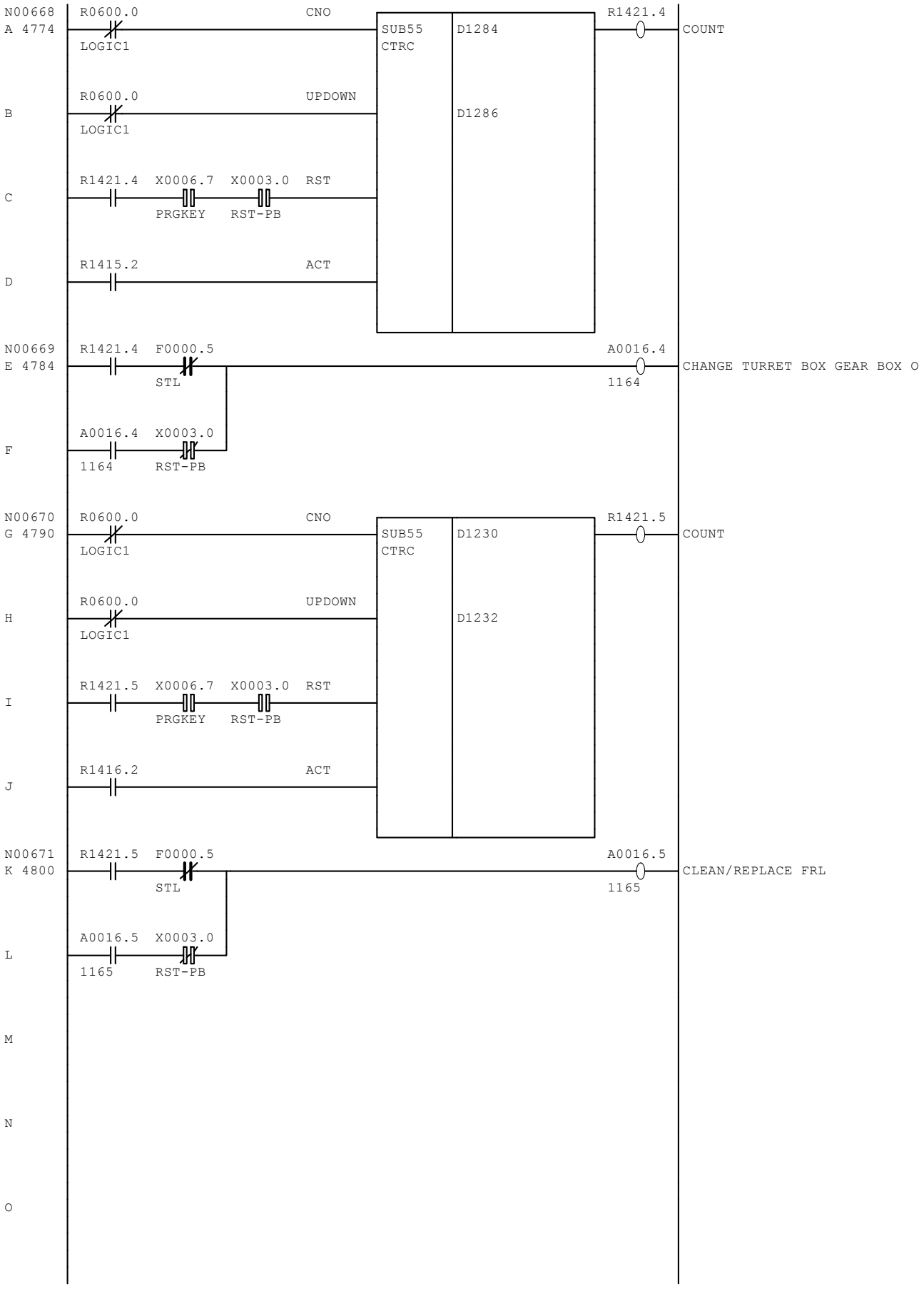
N00668
A 4774
R0600.0
LOGIC1
CNO
SUB55
CTRC
D1284
D1286
R1421.4
COUNT
B
R0600.0
LOGIC1
UPDOWN
C
R1421.4
X0006.7
PRGKEY
X0003.0
RST-PB
RST
D
R1415.2
ACT
N00669
E 4784
R1421.4
F0000.5
STL
A0016.4
1164
CHANGE TURRET BOX GEAR BOX O
F
A0016.4
1164
X0003.0
RST-PB
N00670
G 4790
R0600.0
LOGIC1
CNO
SUB55
CTRC
D1230
D1232
R1421.5
COUNT
H
R0600.0
LOGIC1
UPDOWN
I
R1421.5
X0006.7
PRGKEY
X0003.0
RST-PB
RST
J
R1416.2
ACT
N00671
K 4800
R1421.5
F0000.5
STL
A0016.5
1165
CLEAN/REPLACE FRL
L
A0016.5
1165
X0003.0
RST-PB
M
N
O

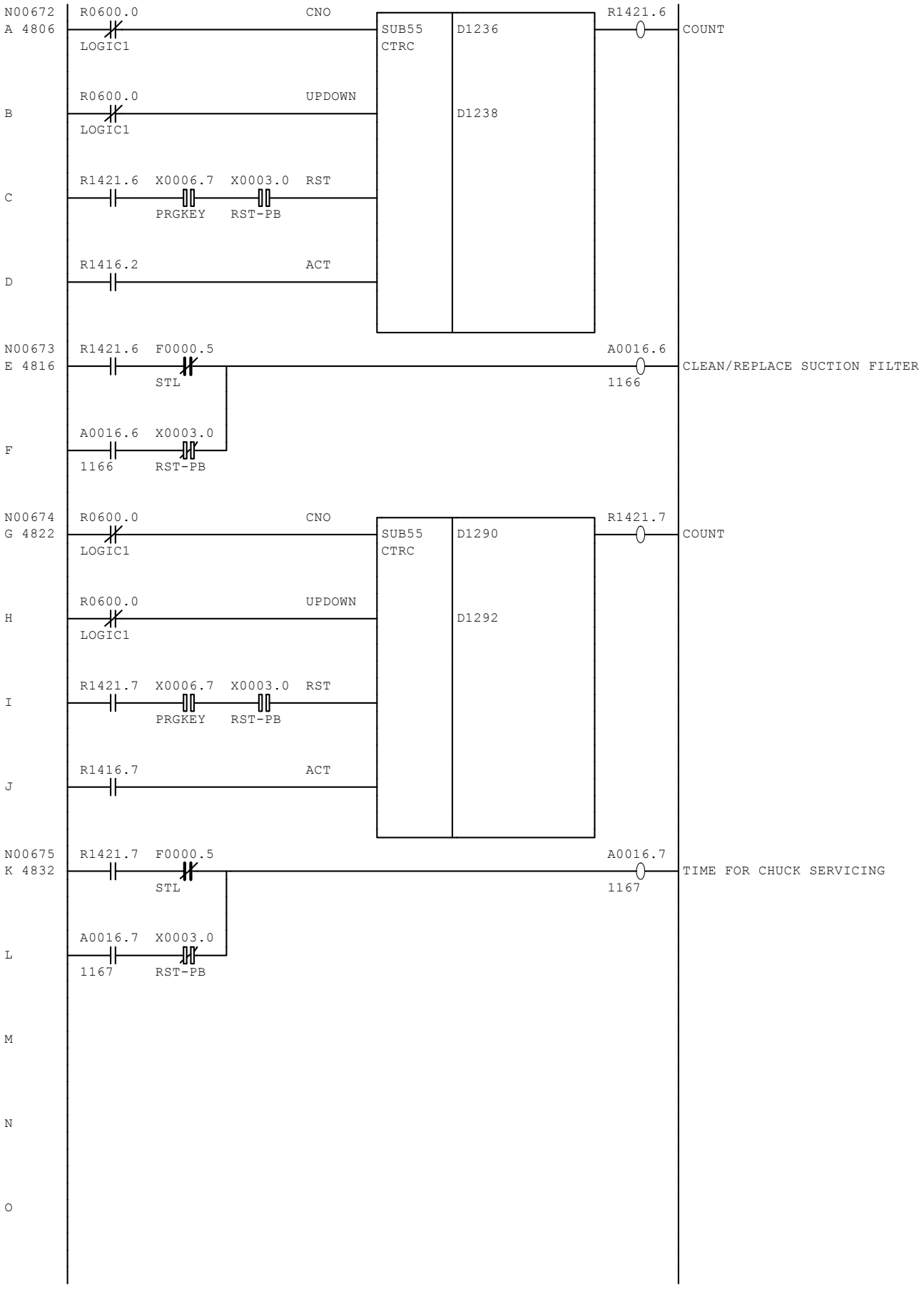
N00672
A 4806
R0600.0
LOGIC1
CNO
SUB55
CTRC
D1236
D1238
R1421.6
COUNT
B
R0600.0
LOGIC1
UPDOWN
C
R1421.6
X0006.7
PRGKEY
X0003.0
RST-PB
RST
D
R1416.2
ACT
N00673
E 4816
R1421.6
F0000.5
STL
A0016.6
1166
CLEAN/REPLACE SUCTION FILTER
F
A0016.6
1166
X0003.0
RST-PB
N00674
G 4822
R0600.0
LOGIC1
CNO
SUB55
CTRC
D1290
D1292
R1421.7
COUNT
H
R0600.0
LOGIC1
UPDOWN
I
R1421.7
X0006.7
PRGKEY
X0003.0
RST-PB
RST
J
R1416.7
ACT
N00675
K 4832
R1421.7
F0000.5
STL
A0016.7
1167
TIME FOR CHUCK SERVICING
L
A0016.7
1167
X0003.0
RST-PB
M
N
O

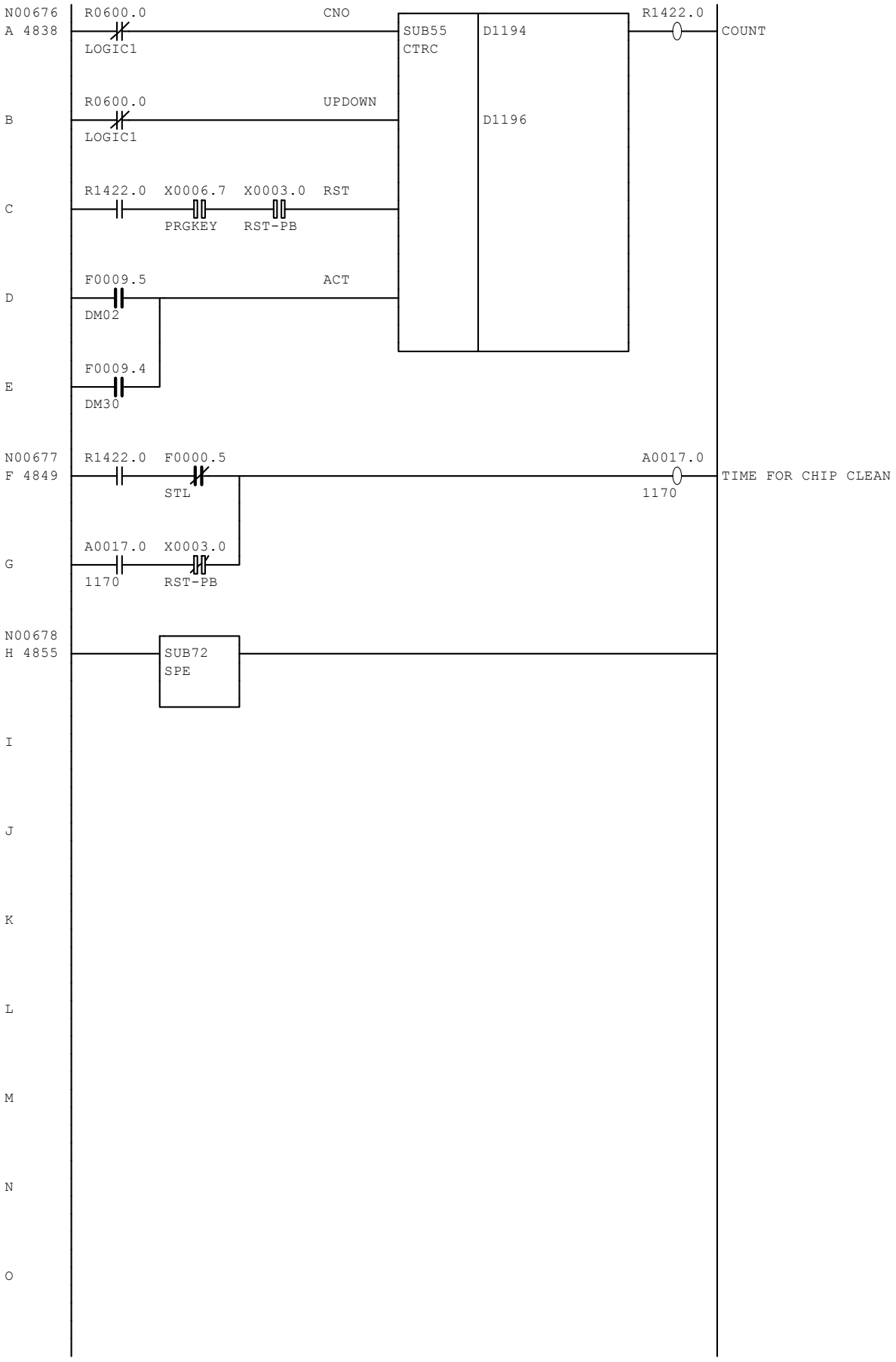
N00676
A 4838
R0600.0
LOGIC1
CNO
SUB55
CTRC
D1194
D1196
R1422.0
COUNT
B
R0600.0
LOGIC1
UPDOWN
C
R1422.0
X0006.7
PRGKEY
X0003.0
RST-PB
RST
D
F0009.5
DM02
ACT
E
F0009.4
DM30
N00677
F 4849
R1422.0
F0000.5
STL
A0017.0
1170
TIME FOR CHIP CLEAN
G
A0017.0
1170
X0003.0
RST-PB
N00678
H 4855
SUB72
SPE
I
J
K
L
M
N
O

NO.	ADDRESS	MESSAGE
0001	A000.0	1000 LOW LUB OIL LEVEL, CYCLE INTERRUPT
0002	A000.1	1001 LOW LUB PRESSURE, CYCLE INTERRUPT
0003	A000.2	1002 CHUCK ACTUATION FAILURE
0004	A000.3	1003 T.S. BODY UNCLAMP FAULT
0005	A000.4	1004 T.S. BODY ACTUATION FAILURE
0006	A000.5	1005 T.S. QUILL NOT IN POSITION, CYCLE INTERRUPT
0007	A000.6	1006 SPINDLE POSITIONING ABORTED
0008	A000.7	1007 PRG CNTL SW OPRTD, RST & HOME X & Z AXES
0009	A001.0	1010 TURRET CLAMP SIGNAL FAULTY
0010	A001.1	1011 T.S. QUILL POSITION LOST, SET DOGS & RESET
0011	A001.2	1012 T.S. QUILL ACTUATION FAIL
0012	A001.3	1013 SPN O/L, CHK TOOL TIP, DEPTH OF CUT & F/R
0013	A001.4	1014 X-AXIS CLUTCH TRIPPED
0014	A001.5	1015 Z-AXIS CLUTCH TRIPPED
0015	A001.6	1016 TOOL WORNOUT, REPLACE THE INSERT
0016	A001.7	1017 TURRET INDEX ABORTED
0017	A002.0	1020 TURRET NOT IN SAFE ZONE, GO X/Z-HOME
0018	A002.1	1021 TURRET MOTOR OVER HEATED
0019	A002.2	1022 TOOL NUMBER HIGH
0020	A002.3	1023 TURRET UNCLAMPED, MOVE SAFE ZONE INDEX
0021	A002.4	1024 PARTS CATCHER ACTUATION FAILURE
0022	A002.5	1025 DOOR ACTUATION FAILURE
0023	A002.6	1026 SPINDLE ORIENTATION ABORTED
0024	A002.7	1027 AIR PRESSURE LOW
0025	A003.0	1030 T.P ACTUATION FAILURE
0026	A003.1	1031 LUB MOTOR/PR SW CONTINUOUSLY ON
0027	A003.2	1032 HOMING FAILURE
0028	A003.3	1033 CANCEL CSS BEFORE T-COMMAND
0029	A003.4	1034 HYDRAULIC OIL LEVEL LOW
0030	A003.5	1035 CONVEYOR TH. TRIP/LOAD
0031	A003.6	
0032	A003.7	
0033	A004.0	
0034	A004.1	
0035	A004.2	1042 MOVE T.S. QUILL TO HOME POS.
0036	A004.3	
0037	A004.4	1044 CHECK TURRET ENCODER
0038	A004.5	
0039	A004.6	
0040	A004.7	
0041	A005.0	1050 PARTS MACHINED = PARTS SET
0042	A005.1	1051 RELEASE EMG PUSH BUTTON
0043	A005.2	1052 HYD/COOLANT TH. OVERLOAD
0044	A005.3	1053 M/C IDLE TRIP, PRESS M/C RESET
0045	A005.4	1054 MOVE T.S.BODY IN OPPOSITE DIR
0046	A005.5	1055 COUNTER BALANCE PRESSURE LOW
0047	A005.6	
0048	A005.7	
0049	A006.0	1060 CABINET TEMP. TOO HIGH
0050	A006.1	1061 PLC O/P OVERLOAD/SHORT CKT.
0051	A006.2	1062 PLC I/P SHORT CKT.,
0052	A006.3	1063 CHECK TURRET STATION
0053	A006.4	
0054	A006.5	
0055	A006.6	
0056	A006.7	
0057	A007.0	
0058	A007.1	
0059	A007.2	
0060	A007.3	
0061	A007.4	
0062	A007.5	
0063	A007.6	1076 SERVO AMP.WARNING(REF MAINT)
0064	A007.7	1077 SPINDLE AMP.WARNING(REF MAINT)
0065	A008.0	1080 TOOL 1 WORNOUT, CHANGE INSERT
0066	A008.1	1081 TOOL 2 WORNOUT, CHANGE INSERT
0067	A008.2	1082 TOOL 3 WORNOUT, CHANGE INSERT
0068	A008.3	1083 TOOL 4 WORNOUT, CHANGE INSERT
0069	A008.4	1084 TOOL 5 WORNOUT, CHANGE INSERT
0070	A008.5	1085 TOOL 6 WORNOUT, CHANGE INSERT
0071	A008.6	1086 TOOL 7 WORNOUT, CHANGE INSERT

NO.	ADDRESS	MESSAGE
0072	A008.7	1087 TOOL 8 WORNOUT, CHANGE INSERT
0073	A009.0	1090 TOOL 9 WORNOUT, CHANGE INSERT
0074	A009.1	1091 TOOL 10 WORNOUT, CHANGE INSERT
0075	A009.2	1092 TOOL 11 WORNOUT, CHANGE INSERT
0076	A009.3	1093 TOOL 12 WORNOUT, CHANGE INSERT
0077	A009.4	1094 TOOL/TOOL GROUP WORNOUT
0078	A009.5	1095 ABS ENCODER NOT SET(P1815.5)
0079	A009.6	1096 OPEN & CLOSE THE DOOR ONCE
0080	A009.7	
0081	A010.0	2100 COOLANT CONTACTOR NOT ON
0082	A010.1	2101 CHUCK POSITION FAULT
0083	A010.2	2102 CHUCK NOT CLAMPED, SPINDLE INHIBIT
0084	A010.3	2103 TOOL IS WEARING OUT
0085	A010.4	2104 CHUCK CLAMPED ON O. D.
0086	A010.5	2105 CHUCK CLAMPED ON I.D.
0087	A010.6	2106 CHUCK IN EXTREME END POSITION
0088	A010.7	2107 AXES NOT REFERENCED, HOME X & Z
0089	A011.0	2110 HOME X BEFORE Z
0090	A011.1	2111 HOME Z BEFORE X
0091	A011.2	2112 CLAMP CHUCK BEFORE SPINDLE START
0092	A011.3	2113 DOOR NOT CLOSED, CLOSE BEFORE CY START
0093	A011.4	2114 CONVEYOR THERMAL TRIP/ L.S. OPEN
0094	A011.5	2115 TOOL PROBING INCOMPLETE,PROBE OTHER AXIS
0095	A011.6	2116 PRESS MACHINE RESET PB
0096	A011.7	2117 COOLANT-2 CONTACTOR NOT ON
0097	A012.0	2120 SPINDLE STOP, DOOR OPEN
0098	A012.1	
0099	A012.2	
0100	A012.3	
0101	A012.4	
0102	A012.5	
0103	A012.6	
0104	A012.7	
0105	A013.0	2130 TOOL 1 GETTING WORNOUT
0106	A013.1	2131 TOOL 2 GETTING WORNOUT
0107	A013.2	2132 TOOL 3 GETTING WORNOUT
0108	A013.3	2133 TOOL 4 GETTING WORNOUT
0109	A013.4	2134 TOOL 5 GETTING WORNOUT
0110	A013.5	2135 TOOL 6 GETTING WORNOUT
0111	A013.6	2136 TOOL 7 GETTING WORNOUT
0112	A013.7	2137 TOOL 8 GETTING WORNOUT
0113	A014.0	2140 TOOL 9 GETTING WORNOUT
0114	A014.1	2141 TOOL 10 GETTING WORNOUT
0115	A014.2	2142 TOOL 11 GETTING WORNOUT
0116	A014.3	2143 TOOL 12 GETTING WORNOUT
0117	A014.4	2144 TOOL/TOOL GROUP GETTING WORNOUT
0118	A014.5	
0119	A014.6	
0120	A014.7	
0121	A015.0	1150 CHECK/REPLACE SPINDLE BELTS
0122	A015.1	1151 CHECK X-SLIDE BACKLASH
0123	A015.2	1152 CHECK Z-SLIDE BACKLASH
0124	A015.3	1153 CHECK X-SLIDE WIPER CONDITION
0125	A015.4	1154 CHECK Z-SLIDE WIPER CONDITION
0126	A015.5	1155 REPLACE LUB. CARTRIDGE
0127	A015.6	1156 CHANGE HYDRAULIC OIL
0128	A015.7	1157 CLEAN DRIVE COOLING FANS
0129	A016.0	1160 CLEAN SPINDLE BLOWER FAN
0130	A016.1	1161 CLEAN PANEL COOLER FILTER
0131	A016.2	1162 REPLACE PANEL COOLER FILTER
0132	A016.3	1163 TIME FOR TURRET SERVICING
0133	A016.4	1164 CHANGE TURRET BOX GEAR BOX OIL
0134	A016.5	1165 CLEAN/REPLACE FRL
0135	A016.6	1166 CLEAN/REPLACE SUCTION FILTER
0136	A016.7	1167 TIME FOR CHUCK SERVICING
0137	A017.0	1170 TIME FOR CHIP CLEAN
0138	A017.1	
0139	A017.2	
0140	A017.3	
0141	A017.4	
0142	A017.5	

ADDRESS	SYMBOL	FIRST COMMENT	STEP NO./NET NO.

X0000.0 CHCKFS CHUCK CLAMP/DECLAMP F.S.
S001633/N00226 S003669/N00516 S003688/N00517 S003708/N00520 S003722/N00520
S003729/N00521 S003743/N00521 S003751/N00522 S003765/N00522 S003772/N00523
S003786/N00523

X0000.1 CKOPPS CHUCK OPEN PR.SW.
S003799/N00526 S003802/N00526 S003831/N00530 S003833/N00530 S003856/N00533
S003859/N00533 S003864/N00534 S003867/N00534 S003875/N00536 S003881/N00537

X0000.2 CKCLPS CHUCK CLOSE PR. SW.
S003800/N00526 S003803/N00526 S003832/N00530 S003834/N00530 S003857/N00533
S003860/N00533 S003865/N00534 S003868/N00534 S003876/N00536 S003882/N00537

X0000.3 TQFRFS T.S. QUILL FWD/RET F.S.
S001634/N00226 S003913/N00542 S003929/N00544 S003939/N00545 S003952/N00546

X0000.4 TQFWPS T.S. QUILL FWD PROX. SW.
S000813/N00112 S003970/N00548 S003975/N00548 S003980/N00549 S003994/N00551
S004002/N00552 S004007/N00553

X0000.5 TQRTPS T.S. QUILL HOME PROX. SW.
S002628/N00372 S002688/N00376 S002710/N00378 S002733/N00380 S002753/N00382
S003293/N00445 S003338/N00455 S003971/N00548 S003976/N00548 S003987/N00550
S003996/N00551 S004009/N00553

X0000.6 LUBFSW LUB. FLOAT SW.
S000142/N00025 S003408/N00469 S003452/N00478 S003475/N00481

X0000.7 LUBPRS LUB. PRESSURE SW.
S003433/N00475 S003438/N00476 S003458/N00479

X0001.0 CHTHTP CHIP CONVEYOR TH. TRIP
S002547/N00360 S002575/N00364 S002584/N00365

X0001.1 TUCLPS TURRET CLAMP PROX. SW.
S000222/N00030 S000262/N00035 S000286/N00037 S000290/N00038 S001236/N00175
S001241/N00176 S001746/N00239 S001761/N00241 S001767/N00242 S001862/N00260

X0001.2 TUTHSW TURRET MOTOR THERMAL CONTACT
S000143/N00025 S001929/N00268

X0001.3 XCLTPS X-CLUTCH TRIP PROX. SW.
S000006/N00002 S000008/N00002 S000013/N00002 S000015/N00002 S000062/N00009
S000065/N00009 S000073/N00010 S000075/N00010 S000158/N00026 S000161/N00026
S000229/N00031 S000232/N00031 S000672/N00095 S000675/N00095 S000695/N00098
S000698/N00098 S000711/N00099 S000714/N00099 S000729/N00100 S000732/N00100
S000946/N00132 S000948/N00132 S002031/N00282 S002033/N00282 S002054/N00284
S002056/N00284 S002075/N00286 S002077/N00286 S002082/N00287 S002084/N00287
S002089/N00287 S002091/N00287 S002117/N00290 S002119/N00290 S002290/N00316
S002292/N00316

X0001.4 ZCLTPS Z-CLUTCH TRIP PROX. SW.
S000022/N00003 S000024/N00003 S000029/N00003 S000031/N00003 S000063/N00009
S000066/N00009 S000164/N00026 S000167/N00026 S000230/N00031 S000233/N00031
S000673/N00095 S000676/N00095 S000696/N00098 S000699/N00098 S000712/N00099
S000715/N00099 S000730/N00100 S000733/N00100 S000971/N00134 S000973/N00134
S002042/N00283 S002044/N00283 S002065/N00285 S002067/N00285 S002096/N00288
S002098/N00288 S002103/N00289 S002105/N00289 S002110/N00289 S002112/N00289
S002126/N00291 S002128/N00291 S002315/N00318 S002317/N00318

X0001.5 PSMRDY PSM P.S. READY SIGNAL
S000041/N00005

X0001.6 CHINPS CHUCK IN PROX. SW.
S003886/N00538

ADDRESS	SYMBOL	FIRST COMMENT	STEP NO./NET NO.

X0001.7 CHOTPS CHUCK OUT PROX. SW.
S003888/N00538

X0002.0 TUFB-1 TURRET BIN F/B-1
S000144/N00025 S001838/N00254 S002796/N00392 S002800/N00392 S002806/N00392
S002810/N00392 S002817/N00392 S002821/N00392 S002827/N00393 S002832/N00393
S002836/N00393 S002842/N00393 S002846/N00393 S002851/N00393 S002859/N00394
S002865/N00394 S002868/N00394 S002874/N00394 S002881/N00395 S002887/N00395
S002890/N00395 S002897/N00395 S003050/N00421 S003054/N00421 S003060/N00421
S003064/N00421 S003071/N00421 S003075/N00421 S003081/N00422 S003086/N00422
S003090/N00422 S003096/N00422 S003100/N00422 S003105/N00422 S003113/N00423
S003119/N00423 S003122/N00423 S003128/N00423 S003135/N00424 S003141/N00424
S003144/N00424 S003151/N00424

X0002.1 TUFB-2 TURRET BIN F/B-2
S000145/N00025 S001840/N00255 S002795/N00392 S002801/N00392 S002805/N00392
S002811/N00392 S002814/N00392 S002822/N00392 S002828/N00393 S002833/N00393
S002837/N00393 S002843/N00393 S002847/N00393 S002852/N00393 S002861/N00394
S002863/N00394 S002869/N00394 S002875/N00394 S002884/N00395 S002885/N00395
S002891/N00395 S002898/N00395 S003049/N00421 S003055/N00421 S003059/N00421
S003065/N00421 S003068/N00421 S003076/N00421 S003082/N00422 S003087/N00422
S003091/N00422 S003097/N00422 S003101/N00422 S003106/N00422 S003115/N00423
S003117/N00423 S003123/N00423 S003129/N00423 S003138/N00424 S003139/N00424
S003145/N00424 S003152/N00424

X0002.2 TUFB-4 TURRET BIN F/B - 4
S000146/N00025 S001842/N00256 S002797/N00392 S002799/N00392 S002804/N00392
S002812/N00392 S002815/N00392 S002819/N00392 S002829/N00393 S002831/N00393
S002838/N00393 S002844/N00393 S002849/N00393 S002853/N00393 S002860/N00394
S002864/N00394 S002870/N00394 S002876/N00394 S002882/N00395 S002888/N00395
S002893/N00395 S002895/N00395 S003051/N00421 S003053/N00421 S003058/N00421
S003066/N00421 S003069/N00421 S003073/N00421 S003083/N00422 S003085/N00422
S003092/N00422 S003098/N00422 S003103/N00422 S003107/N00422 S003114/N00423
S003118/N00423 S003124/N00423 S003130/N00423 S003136/N00424 S003142/N00424
S003147/N00424 S003149/N00424

X0002.3 TUFB-8 TURRET BIN F/B - 8
S000147/N00025 S001844/N00257 S002798/N00392 S002802/N00392 S002807/N00392
S002809/N00392 S002816/N00392 S002820/N00392 S002830/N00393 S002834/N00393
S002839/N00393 S002841/N00393 S002848/N00393 S002854/N00393 S002862/N00394
S002866/N00394 S002871/N00394 S002873/N00394 S002883/N00395 S002886/N00395
S002892/N00395 S002896/N00395 S003052/N00421 S003056/N00421 S003061/N00421
S003063/N00421 S003070/N00421 S003074/N00421 S003084/N00422 S003088/N00422
S003093/N00422 S003095/N00422 S003102/N00422 S003108/N00422 S003116/N00423
S003120/N00423 S003125/N00423 S003127/N00423 S003137/N00424 S003140/N00424
S003146/N00424 S003150/N00424

X0002.4 TFBSTR TURRET F/B STROBE
S000148/N00025 S000254/N00034 S001989/N00275 S001992/N00276 S002824/N00392
S002856/N00393 S002878/N00394 S002900/N00395 S003078/N00421 S003110/N00422
S003132/N00423 S003154/N00424

ADDRESS	SYMBOL	FIRST COMMENT	STEP NO./NET NO.

X0003.0 RST-PB M/C RESET P.B.

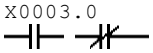

S000058/N00008 S000112/N00020 S000139/N00024 S000152/N00025 S000342/N00047
S000778/N00106 S000870/N00120 S000879/N00122 S001217/N00172 S001659/N00228
S001663/N00229 S001689/N00231 S001702/N00232 S001715/N00234 S001733/N00236
S002026/N00281 S002282/N00315 S002521/N00353 S002581/N00364 S002990/N00408
S002995/N00409 S003000/N00410 S003005/N00411 S003244/N00437 S003249/N00438
S003254/N00439 S003259/N00440 S003356/N00457 S003964/N00547 S003984/N00549
S003991/N00550 S003999/N00551 S004170/N00582 S004184/N00584 S004198/N00586
S004212/N00588 S004226/N00590 S004240/N00592 S004254/N00594 S004268/N00596
S004282/N00598 S004296/N00600 S004310/N00602 S004324/N00604 S004408/N00621
S004424/N00624 S004428/N00625 S004586/N00644 S004595/N00645 S004602/N00646
S004611/N00647 S004618/N00648 S004627/N00649 S004634/N00650 S004643/N00651
S004650/N00652 S004659/N00653 S004666/N00654 S004675/N00655 S004682/N00656
S004691/N00657 S004698/N00658 S004707/N00659 S004714/N00660 S004723/N00661
S004730/N00662 S004739/N00663 S004746/N00664 S004755/N00665 S004762/N00666
S004771/N00667 S004778/N00668 S004787/N00669 S004794/N00670 S004803/N00671
S004810/N00672 S004819/N00673 S004826/N00674 S004835/N00675 S004842/N00676
S004852/N00677

X0003.1 TINDPB TURRET INDEX ON PB

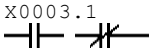

S000292/N00038 S001651/N00227 S001752/N00240 S001766/N00242 S001922/N00267
S001946/N00270 S002207/N00303 S003027/N00414 S003281/N00443

X0003.2 CLONOF COOLANT ON/OF PB.

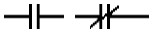

S003628/N00510 S003639/N00511

X0003.3 CYST-1 CYCLE START PB-1

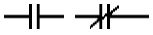

S000753/N00104 S000755/N00104 S000765/N00105 S000768/N00105 S000795/N00110
S001635/N00226

X0003.4 CHIP.F CHIP CONVEYOR FWD SEL SW.

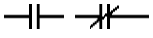

S002594/N00366 S002601/N00367 S002608/N00368

X0003.5 CHIP.R CHIP CONVEYOR REV SEL SW.

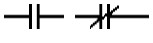

S002595/N00366 S002602/N00367 S002609/N00368

X0003.6 LUBPB LUB INCH PB

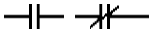

S001636/N00226 S002209/N00303 S003415/N00471 S003420/N00472 S003440/N00476
S003460/N00479

X0003.7 DOORPB DOOR OPEN/CLOSE PB

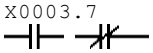

S001654/N00227 S002208/N00303 S002237/N00306 S002450/N00345 S002461/N00346
S002517/N00353

X0004.0 XAE PROBE SENSING SIGNAL ON

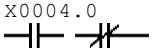

S002915/N00397 S002922/N00398 S002936/N00400 S002943/N00401 S002957/N00403
S002964/N00404 S002978/N00406 S002985/N00407 S003169/N00426 S003176/N00427
S003190/N00429 S003197/N00430 S003211/N00432 S003218/N00433 S003232/N00435
S003239/N00436

X0004.6 TPSGNL T.P. SIGNAL

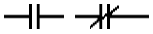

S002789/N00390 S003042/N00419

X0004.7 SKIP SKIP SIGNAL

S003334/N00454

X0005.0 CYSTPB CYCLE START PB

S000798/N00110 S000992/N00136 S001004/N00137 S002035/N00282 S002046/N00283
S002336/N00320 S002348/N00321

X0005.1 FHLDPB FEED HOLD PB

S000198/N00030 S001637/N00226

X0005.2 SPCWPB SPINDLE CW PB

S001477/N00212 S001501/N00214 S001625/N00225 S001638/N00226 S002225/N00306

ADDRESS	SYMBOL	FIRST COMMENT	STEP NO./NET NO.
X0005.3	SPSTPB	SPINDLE STOP PB	
	S001480/N00212 S001514/N00214 S001541/N00216 S001639/N00226 S002229/N00306		
X0005.4	SPACPB	SPINDLE CCW PB	
	S001478/N00212 S001533/N00216 S001626/N00225 S001640/N00226 S002226/N00306		
X0005.5	SPOVR1	SPINDLE SPEED O/R - SPA	
	S001296/N00185 S001299/N00185 S001414/N00197		
X0005.6	SPOVR2	SPINDLE SPEED O/R - SPB	
	S001295/N00185 S001298/N00185 S001418/N00198		
X0005.7	SPOVR3	SPINDLE SPEED O/R - SPC	
	S001294/N00185 S001297/N00185 S001422/N00199		
X0006.0	MD1.M	MODE SELECT - MD1	
	S000624/N00084 S000628/N00085 S000633/N00086 S000637/N00087 S000641/N00088 S000645/N00089 S000649/N00090 S000653/N00091		
X0006.1	MD2.M	MODE SELECT - MD2	
	S000623/N00084 S000627/N00085 S000632/N00086 S000636/N00087 S000640/N00088 S000644/N00089 S000648/N00090 S000652/N00091		
X0006.2	MD4.M	MODE SELECT - MD4	
	S000622/N00084 S000626/N00085 S000631/N00086 S000635/N00087 S000639/N00088 S000643/N00089 S000647/N00090 S000651/N00091		
X0006.5	ROV\MP1.M	RAPID TRAVERSE O/R \ MPG- 1	
	S001019/N00140 S001021/N00140 S001025/N00141 S001027/N00141 S001233/N00175		
X0006.6	ROV\MP2.M	RAPID TRAVERSE O/R\MPG- 2	
	S001018/N00140 S001020/N00140 S001024/N00141 S001026/N00141 S001238/N00176		
X0006.7	PRGKEY	PROGRAM PROTECT SELECT	
	S000738/N00101 S001643/N00226 S004585/N00644 S004601/N00646 S004617/N00648 S004633/N00650 S004649/N00652 S004665/N00654 S004681/N00656 S004697/N00658 S004713/N00660 S004729/N00662 S004745/N00664 S004761/N00666 S004777/N00668 S004793/N00670 S004809/N00672 S004825/N00674 S004841/N00676		
X0007.0	FRO1.M	FEED O/R - 1	
	S001270/N00184 S001274/N00184 S001279/N00184 S001284/N00184 S001289/N00184 S001304/N00186		
X0007.1	FRO2.M	FEED O/R - 2	
	S001269/N00184 S001273/N00184 S001278/N00184 S001283/N00184 S001288/N00184 S001310/N00187		
X0007.2	FRO4.M	FEED O/R - 4	
	S001268/N00184 S001272/N00184 S001277/N00184 S001282/N00184 S001287/N00184 S001318/N00188		
X0007.3	FRO8.M	FEED O/R - 8	
	S001267/N00184 S001271/N00184 S001276/N00184 S001281/N00184 S001286/N00184 S001326/N00189		
X0007.4	+X.M	+X JOG PB	
	S000941/N00132 S000991/N00136 S001641/N00226 S002309/N00318 S002347/N00321		
X0007.5	-X.M	-X JOG PB	
	S000957/N00133 S001648/N00227 S002326/N00319		
X0007.6	+Z.M	+Z JOG PB	
	S000965/N00134 S001003/N00137 S001649/N00227 S002190/N00300 S002285/N00316 S002335/N00320		

ADDRESS	SYMBOL	FIRST COMMENT	STEP NO./NET NO.
X0007.7	-Z.M	-Z JOG PB	
	S000982/N00135 S001650/N00227 S002188/N00300 S002301/N00317		
X0008.0	CYST-2	CYCLE START PB - 2	
	S000754/N00104 S000756/N00104 S000766/N00105 S000769/N00105		
X0008.1	TBULPS	T.S. BODY UNCLAMP PR. SW.	
	S002692/N00377 S002714/N00379 S002737/N00381 S002758/N00383 S002763/N00384 S002768/N00385 S002778/N00387 S003360/N00458 S003372/N00460 S003378/N00461 S003382/N00461 S003900/N00541		
X0008.2	TBFWLS	T.S. BODY FWD L.S.	
	S002651/N00374 S002717/N00379 S002744/N00382 S002747/N00382		
X0008.3	TBHMLS	T.S. BODY HOME L.S.	
	S002660/N00375 S002740/N00381 S002745/N00382 S002748/N00382		
X0008.4	*ESP	EMERGENCY RELEASE SIGNAL	
	S000037/N00004 S000050/N00006 S000053/N00007		
X0008.5	TBFRFS	T.S. BODY FWD/RET FOOT SWITCH	
	S002640/N00373 S002649/N00374 S002658/N00375		
X0008.6	DROPLS	DOOR OPEN L.S.	
	S002497/N00351 S002502/N00351		
X0008.7	DRCLLS	DOOR CLOSE L.S.	
	S000783/N00107 S000787/N00108 S000792/N00109 S001457/N00208 S001461/N00209 S002219/N00305 S002227/N00306 S002235/N00306 S002498/N00351 S002503/N00351 S002518/N00353		
X0009.2	CBALPRSW	COUNTER BALANCE PR.SW.	
	S002280/N00315		
X0009.4	TPHMLS	TP ARM HOME L.S.	
	S000177/N00026 S001491/N00213 S002792/N00391 S003046/N00420 S003311/N00448 S003313/N00448 S003339/N00455		
X0009.5	TPFWLS	TP ARM FWD L.S.	
	S003045/N00420 S003310/N00448 S003314/N00448		
X0009.6	PCFWPR	PARTS CATCHER FWD PROX. SW.	
	S002429/N00341 S002432/N00341		
X0009.7	PCRTPR	PARTS CATCHER RET PROX. SW.	
	S002430/N00341 S002433/N00341		
X0010.0	RT.M	MANUAL RAPID TRAVERSE PB	
	S001015/N00139		
X0010.3	OPST.M	OPTIONAL STOP	
	S000748/N00103 S000854/N00117		
X0010.4	BDEL.M	BLOCK DELETE	
	S000909/N00126 S000916/N00128 S002134/N00292 S002146/N00294		
X0010.5	DRYN.M	DRY RUN	
	S000913/N00127		
X0010.6	PRGT.M	PROGRAM TEST	
	S000910/N00126 S000925/N00129 S002140/N00293 S002148/N00294		
X0011.0	EMGREL	EMG PB RELEASE SIGNAL	
	S000038/N00004 S000079/N00011 S001658/N00228 S001665/N00229 S001675/N00230		

ADDRESS	SYMBOL	FIRST COMMENT	STEP NO./NET NO.
X0011.1	HYDFLT	HYD. FLOAT SW. SIGNAL	
	S000149/N00025 S001684/N00231		
X0011.2	AIRPRS	AIR PRESSURE SWITCH	
	S004400/N00620		
X0011.3	A/CALM	A/C ALARM SIGNAL	
	S001693/N00232 S001695/N00232		
X0011.5	HYCLTH	HYD/COOL THERMAL RELAY	
	S000081/N00012 S000150/N00025 S001666/N00229 S001676/N00230		
X0015.0	DOALM0	DO ALARM-0	
	S000128/N00023		
X0015.1	DOALM1	DO ALARM-1	
	S000129/N00023		
X0015.2	DOALM2	DO ALARM-2	
	S000130/N00023		
X0015.3	DOALM3	DO ALARM-3	
	S000131/N00023		
X0015.4	DOALM4	DO ALARM-4	
	S000132/N00023		
X0015.5	DOALM5	DO ALARM-5	
	S000133/N00023		
X0015.6	DOALM6	DO ALARM-6	
	S000134/N00023		
X0015.7	DOALM7	DO ALARM-7	
	S000135/N00023		

ADDRESS	SYMBOL	FIRST COMMENT	STEP NO./NET NO.
Y0000.0	CHKOPN	CHUCK OPEN OUTPUT	
	S003663/N00516 S003675/N00516 S003796/N00525 S003798/N00526 S003820/N00529 S004575/N00643		
	S003793/N00524		
Y0000.1	CHKCLS	CHUCK CLOSE OUTPUT	
	S003661/N00516 S003677/N00516 S003792/N00524 S003801/N00526 S003821/N00529 S004576/N00643		
	S003797/N00525		
Y0000.2	TQFWSL	T.S. QUILL FWD O/P	
	S003921/N00542 S003958/N00546 S003960/N00547		
	S003946/N00545		
Y0000.3	TQRTSL	T.S. QUILL RET O/P	
	S003912/N00542 S003945/N00545 S003961/N00547		
	S003959/N00546		
Y0000.4	XZBRK	X & Z BRAKE RELEASE O/P	
	S000119/N00020 S000123/N00021 S000126/N00022		
	S000070/N00009		
Y0000.5	TOW1.L	END OF MACHINE LAMP O/P	
	S000895/N00123		
Y0000.6	TOW2.L	TOWER LAMP RED	
	S000867/N00119		
Y0000.7	TOW3.L	TOWER LAMP GREEN	
	S000880/N00122		
	S000858/N00118		
Y0001.0	+XOFST	+X OFFSET WRITE	
	S002916/N00397 S002921/N00398 S002933/N00400 S002954/N00403 S002975/N00406 S002987/N00408 S003170/N00426 S003175/N00427 S003187/N00429 S003208/N00432 S003229/N00435 S003241/N00437		
	S002920/N00397 S003174/N00426		
Y0001.1	-XOFST	-X OFFSET WRITE	
	S002912/N00397 S002937/N00400 S002942/N00401 S002955/N00403 S002976/N00406 S002992/N00409 S003166/N00426 S003191/N00429 S003196/N00430 S003209/N00432 S003230/N00435 S003246/N00438		
	S002941/N00400 S003195/N00429		
Y0001.2	+ZOFST	+Z OFFSET WRITE	
	S002913/N00397 S002934/N00400 S002958/N00403 S002963/N00404 S002977/N00406 S002997/N00410 S003167/N00426 S003188/N00429 S003212/N00432 S003217/N00433 S003231/N00435 S003251/N00439		
	S002962/N00403 S003216/N00432		
Y0001.3	-ZOFST	-Z OFFSET WRITE	
	S002914/N00397 S002935/N00400 S002956/N00403 S002979/N00406 S002984/N00407 S003002/N00411 S003168/N00426 S003189/N00429 S003210/N00432 S003233/N00435 S003238/N00436 S003256/N00440		
	S002983/N00406 S003237/N00435		
Y0001.4	TPOUT	T.P. O/P SIGNAL (X0004.0 I/P)	
	S002790/N00390 S003043/N00419		
Y0002.0	HYDON	HYDRAULICS ON O/P	
	S001664/N00229 S001674/N00230 S004558/N00641 S004567/N00642 S004577/N00643		
	S001673/N00229		

ADDRESS	SYMBOL	FIRST COMMENT	STEP NO./NET NO.
Y0002.1	LUBON	LUBRICATION ON O/P	
	S003411/N00470 S003432/N00475 S003437/N00476 S003457/N00479 S003490/N00484		
	S003498/N00485 S003504/N00485		
	S003508/N00485		
Y0002.2	COOLON	COOLANT ON O/P	
	S003643/N00512		
	S003641/N00511		
Y0002.3	TURFWD	TURRET MOTOR FWD O/P	
	S000308/N00040 S001866/N00261 S001882/N00263 S002009/N00279 S004525/N00638		
	S004536/N00639 S004547/N00640		
	S000303/N00039		
Y0002.4	TURREV	TURRET MOTOR RET O/P	
	S000299/N00039 S001867/N00261 S001883/N00263 S002010/N00279 S004526/N00638		
	S004537/N00639 S004548/N00640		
	S000311/N00040		
Y0002.5	MCC_ON	PSM MCC ON O/P	
	S000043/N00005 S000051/N00006		
	S000048/N00005		
Y0002.6	CHIPFW	CHIP CONVEYOR FWD O/P	
	S002565/N00363 S002614/N00368 S002621/N00369		
	S002600/N00366		
Y0002.7	CHIPRE	CHIP CONVEYOR RET O/P	
	S002598/N00366 S002616/N00368 S002619/N00369		
	S002618/N00368		
Y0003.0	XREF.L	X REFERENCE LAMP	
	S000693/N00098 S000998/N00136 S002154/N00295 S002342/N00320		
	S000707/N00098		
Y0003.1	ZREF.L	Z REFERENCE LAMP	
	S000709/N00099 S001010/N00137 S002155/N00295 S002354/N00321		
	S000723/N00099		
Y0003.2	LFLT.L	LUB FAULT LAMP	
	S000209/N00030 S000823/N00113 S003409/N00469 S003485/N00483		
	S003477/N00481		
Y0003.3	CCLP.L	CHUCK CLAMP LAMP	
	S001485/N00213 S001629/N00225		
	S003862/N00533		
Y0003.4	CDLP.L	CHUCK DECLAMP LAMP	
	S003294/N00445 S003501/N00485 S003871/N00535		
	S003870/N00534		
Y0004.0	DROPSL	DOOR OPEN O/P	
	S002493/N00350		
	S002490/N00349		
Y0004.1	DRCLSL	DOOR CLOSE O/P	
	S002489/N00349		
	S002494/N00350		
Y0004.3	DRLKSL	DOOR LOCK ON SOL.	
	S002228/N00306 S002236/N00306		
	S002243/N00306		

ADDRESS	SYMBOL	FIRST COMMENT	STEP NO./NET NO.
Y0004.4	PCFWSL	PARTS CATCHER FWD O/P	
	S002425/N00340		
	S002422/N00339		
Y0004.5	PCRTSL	PARTS CATCHER RET O/P	
	S002420/N00339		
	S002427/N00340		
Y0005.0	TBFWSL	TS BODY/PLUNGER(LT25) FWD O/P	
	S002739/N00381	S002776/N00387	S003366/N00459 S003370/N00460 S003379/N00461
	S003383/N00461		
	S002719/N00379	S003369/N00459	
Y0005.1	TBRTSL	T.S. BODY RET O/P	
	S002716/N00379	S002777/N00387	
	S002742/N00381		
Y0005.2	TBUCSL	T.S. BODY UNCLAMP O/P	
	S002679/N00376	S002691/N00377	S002715/N00379 S002738/N00381 S002767/N00385
	S003352/N00457	S003359/N00458	S003371/N00460 S003386/N00462
	S002690/N00376	S003358/N00457	
Y0005.3	TPFWSL	T.P. ARM FWD O/P	
	S003306/N00447		
	S003302/N00446		
Y0005.4	TPRTSL	T.P. ARM RET O/P	
	S003300/N00446		
	S003308/N00447		
Y0005.5	XADBRK	X-AXIS ADDITIONAL BRAKE	
	S000078/N00010		
Y0006.0	CYST.L	CYCLE START LAMP	
	S000890/N00123	S000943/N00132	S000959/N00133 S000967/N00134 S000984/N00135
	S001652/N00227	S001685/N00231	S001698/N00232 S001711/N00234 S001729/N00236
	S002287/N00316	S002303/N00317	S002311/N00318 S002328/N00319 S004418/N00624
	S000841/N00115		
Y0006.1	FHLD.L	FEED HOLD LAMP	
	S000845/N00116		
Y0006.2	SPCW.L	SPINDLE CW LAMP	
	S001530/N00215		
Y0006.3	SPAW.L	SPINDLE CCW(ANTI CW) LAMP	
	S001561/N00217		

ADDRESS	SYMBOL	FIRST COMMENT	STEP NO./NET NO.
F0000.0	RWD	REWINDING SIGNAL	
	S000100/N00015 S000120/N00020		
F0000.4	SPL	FEED HOLD LAMP SIGNAL	
	S000840/N00115 S000842/N00116		
F0000.5	STL	CYCLE START LAMP SIGNAL	
	S000828/N00114 S000833/N00114 S000837/N00115 S000844/N00116 S000857/N00118		
	S000911/N00126 S000921/N00128 S000929/N00129 S002136/N00292 S002141/N00293		
	S002150/N00294 S002234/N00306 S002453/N00345 S002463/N00346 S002577/N00364		
	S002645/N00373 S002653/N00374 S002662/N00375 S003447/N00477 S003453/N00478		
	S003468/N00480 S003496/N00485 S003499/N00485 S004173/N00583 S004187/N00585		
	S004201/N00587 S004215/N00589 S004229/N00591 S004243/N00593 S004257/N00595		
	S004271/N00597 S004285/N00599 S004299/N00601 S004313/N00603 S004327/N00605		
	S004409/N00621 S004593/N00645 S004609/N00647 S004625/N00649 S004641/N00651		
	S004657/N00653 S004673/N00655 S004689/N00657 S004705/N00659 S004721/N00661		
	S004737/N00663 S004753/N00665 S004769/N00667 S004785/N00669 S004801/N00671		
	S004817/N00673 S004833/N00675 S004850/N00677		
F0000.6	SA	SERVO READY SIGNAL	
	S000060/N00009 S000071/N00010 S000780/N00106		
F0001.0	NCALM	NC ALARM	
	S000864/N00119		
F0001.1	RST	RESET SIGNAL	
	S000102/N00016 S000105/N00017 S000777/N00106		
F0001.2	NCMSG	NC MESSAGE	
	S000887/N00123		
F0001.4	ENB	SPINDLE COMMAND ENB SIGNAL	
	S001482/N00212 S001569/N00219 S001586/N00221		
F0002.1	RPDO	RAPID FEED RATE SELECT	
	S000173/N00026		
F0002.2			
	S002173/N00298		
F0003.0	MINC	INCREMENTAL FEED SELECT SIGNAL	
	S000679/N00095 S000688/N00097 S001031/N00142 S001036/N00143 S001050/N00145		
	S001062/N00146		
F0003.1	MH	MANUAL HANDLE FEED SIGNAL	
	S000670/N00095 S000687/N00097 S001032/N00142 S001037/N00143 S001051/N00145		
	S001063/N00146 S004486/N00634 S004496/N00635 S004506/N00636 S004516/N00637		
F0003.2	MJ	JOG FEED SELECT CHECK SIGNAL	
	S000011/N00002 S000027/N00003 S000068/N00009 S000689/N00097 S001016/N00139		
	S002037/N00282 S002048/N00283 S002186/N00300 S002224/N00306		
F0003.3	MMDI	MANUAL DATA INPUT SELECT	
	S000684/N00096 S000801/N00110 S002233/N00306		
F0003.5	MMEM	AUTOMATIC OPERATION SELECT	
	S000683/N00096 S000818/N00112 S000831/N00114 S001291/N00184 S001301/N00185		
	S001572/N00219 S002172/N00298 S002220/N00305 S002232/N00306 S002528/N00356		
	S002533/N00357 S002573/N00364 S002586/N00365 S003019/N00413 S003026/N00414		
	S003273/N00442 S003280/N00443 S003698/N00518 S003892/N00538 S004012/N00553		
F0003.6	MEDT	MEMORY EDIT SELECT SIGNAL	
	S000682/N00096		

ADDRESS	SYMBOL	FIRST COMMENT	STEP NO./NET NO.
F0004.5	REFSEL	REF MODE SELECTED	
	S000990/N00136 S001002/N00137 S001074/N00147 S001078/N00148 S001084/N00149 S001088/N00150 S002334/N00320 S002346/N00321		
F0007.0	MF	M-STROBE	
	S000467/N00049 S000470/N00049 S000538/N00070 S000544/N00071 S000550/N00072 S000556/N00073 S000562/N00074 S000568/N00075 S000574/N00076 S000580/N00077 S000586/N00078 S000592/N00079 S000598/N00080 S000604/N00081 S000610/N00082 S000616/N00083		
F0007.3	TF	T-STROBE SIGNAL	
	S000250/N00034 S000264/N00035 S000266/N00036 S000314/N00041 S000325/N00043 S000345/N00047 S000468/N00049 S000472/N00049 S001771/N00243 S001779/N00244 S001783/N00245 S001791/N00246 S001802/N00251 S001833/N00252 S001855/N00259 S001864/N00260 S001870/N00261 S001920/N00267 S001930/N00268 S001952/N00271 S001955/N00272 S002003/N00278 S002012/N00279 S002023/N00281 S002174/N00298 S003028/N00414 S003282/N00443		
F0009.4	DM30	M30 DECODE SIGNAL	
	S000086/N00013 S000116/N00020 S000351/N00048 S000779/N00106 S000793/N00109 S000847/N00117 S000872/N00121 S002241/N00306 S004844/N00676		
F0009.5	DM02	M02 DECODE SIGNAL	
	S000350/N00048 S000846/N00117 S001686/N00231 S001699/N00232 S001712/N00234 S001730/N00236 S002578/N00364 S003500/N00485 S004174/N00583 S004188/N00585 S004202/N00587 S004216/N00589 S004230/N00591 S004244/N00593 S004258/N00595 S004272/N00597 S004286/N00599 S004300/N00601 S004314/N00603 S004328/N00605 S004410/N00621 S004420/N00624 S004843/N00676		
F0009.6	DM01	M01 DECODE SIGNAL	
	S000349/N00048 S000749/N00103 S000850/N00117 S000853/N00117 S000888/N00123		
F0009.7	DM00	M00 DECODE SIGNAL	
	S000348/N00048 S000747/N00103 S000849/N00117 S000889/N00123		
F0026.0	T00	T-CODE - 1	
	S000267/N00036 S000320/N00043 S001794/N00247 S001851/N00259 S001916/N00267		
F0026.1	T01	T CODE - 2	
	S000268/N00036 S000321/N00043 S001796/N00248 S001852/N00259 S001917/N00267		
F0026.2	T02	T CODE - 4	
	S000269/N00036 S000322/N00043 S001798/N00249 S001853/N00259 S001918/N00267		
F0026.3	T03	T CODE - 8	
	S000270/N00036 S000323/N00043 S001800/N00250 S001854/N00259 S001919/N00267		
F0026.4	T04	T CODE - 16	
	S000271/N00036		
F0038.0	SCLP	SPINDLE CLAMP SIGNAL	
	S004388/N00616		
F0038.1	SUCLP	SPINDLE UNCLAMP SIGNAL	
	S004385/N00615		
F0045.0	ALMA	ALARM SIGNAL (SPINLDE)	
	S000039/N00004 S000046/N00005		
F0045.1	SSTA	SPINDLE SPEED ZERO SIGNAL	
	S000044/N00005 S000174/N00026 S001566/N00219 S001616/N00224 S002633/N00372 S003651/N00515 S003903/N00541		
F0045.3	SARA	SPINDLE SPEED ARRIVAL SIGNAL	
	S000175/N00026 S000184/N00027 S001600/N00223		

ADDRESS	SYMBOL	FIRST COMMENT	STEP NO./NET NO.
F0045.4	LDT1A	LOAD DETECT SIGNAL	
	S000188/N00028		
F0045.7	ORARA	ORIENTATION COMPLETION SIGNAL	
	S004359/N00610		
F0054.0	UO000	MACRO O/P SIGNAL	
	S004031/N00558 S004034/N00559 S004079/N00570 S004086/N00571 S004093/N00572		
	S004100/N00573 S004107/N00574 S004114/N00575 S004121/N00576 S004128/N00577		
	S004135/N00578 S004142/N00579 S004149/N00580 S004156/N00581		
F0054.1	UO001	MACRO O/P SIGNAL	
	S004039/N00560 S004042/N00561 S004080/N00570 S004087/N00571 S004094/N00572		
	S004101/N00573 S004108/N00574 S004115/N00575 S004122/N00576 S004129/N00577		
	S004136/N00578 S004143/N00579 S004150/N00580 S004157/N00581		
F0054.2	UO002	MACRO O/P SIGNAL	
	S004047/N00562 S004050/N00563 S004081/N00570 S004088/N00571 S004095/N00572		
	S004102/N00573 S004109/N00574 S004116/N00575 S004123/N00576 S004130/N00577		
	S004137/N00578 S004144/N00579 S004151/N00580 S004158/N00581		
F0054.3	UO003	MACRO O/P SIGNAL	
	S004055/N00564 S004058/N00565 S004082/N00570 S004089/N00571 S004096/N00572		
	S004103/N00573 S004110/N00574 S004117/N00575 S004124/N00576 S004131/N00577		
	S004138/N00578 S004145/N00579 S004152/N00580 S004159/N00581		
F0054.4	UO004	MACRO O/P SIGNAL	
	S004063/N00566 S004066/N00567 S004083/N00570 S004090/N00571 S004097/N00572		
	S004104/N00573 S004111/N00574 S004118/N00575 S004125/N00576 S004132/N00577		
	S004139/N00578 S004146/N00579 S004153/N00580 S004160/N00581		
F0054.5	UO005	MACRO O/P SIGNAL	
	S004071/N00568 S004074/N00569 S004084/N00570 S004091/N00571 S004098/N00572		
	S004105/N00573 S004112/N00574 S004119/N00575 S004126/N00576 S004133/N00577		
	S004140/N00578 S004147/N00579 S004154/N00580 S004161/N00581		
F0062.7	PRTSF	PART COUNT FINISHED	
	S000868/N00120		
F0064.0	TLCH	TOOL GROUP WORN OUT	
	S004416/N00624		
F0064.3	TOOLWR	TOOL GETTING WEAR	
	S004426/N00625		
F0070.0	PSW01	TURRET SAFE ZONE BAND	
	S001736/N00237 S002632/N00372 S002687/N00376 S003295/N00445 S003337/N00455		
F0070.1	PSW02	X HOMING ZONE(AUTO REF)	
	S001737/N00237		
F0070.3	PSW04	T.S. +VE LIM RANGE	
	S002187/N00300 S003387/N00462		
F0070.4	PSW05	T.S. -VE LIM RANGE	
	S002189/N00300 S003388/N00462		
F0076.3	RTAP	RIGID TAPPING ON ACKNOWLEDGE	
	S001518/N00214 S001545/N00216 S001564/N00219 S001585/N00221 S001596/N00222		
F0093.4	SVWRN1		
	S001708/N00233		
F0093.5	SVWRN2		
	S001707/N00233		

ADDRESS	SYMBOL	FIRST COMMENT	STEP NO./NET NO.
F0093.6	SVWRN3		
	S001706/N00233		
F0093.7	SVWRN4		
	S001705/N00233		
F0094.0	ZP1	X-REFERENCE SIGNAL	
	S000692/N00098 S000704/N00098 S000725/N00100 S000996/N00136 S000997/N00136 S001043/N00144 S001067/N00146 S001095/N00151 S002161/N00296 S002168/N00297 S002340/N00320 S002341/N00320		
F0094.1	ZP2	Z-REFERENCE SIGNAL	
	S000708/N00099 S000720/N00099 S000726/N00100 S001008/N00137 S001009/N00137 S001041/N00144 S001055/N00145 S001099/N00152 S002162/N00296 S002169/N00297 S002352/N00321 S002353/N00321		
F0094.2	ZP3	3RD AXIS REF COMPLETE	
	S000445/N00048		
F0102.0	MV1	X-AXIS MOVING SIGNAL	
	S002903/N00396 S002924/N00399 S002947/N00402 S002968/N00405 S003157/N00425 S003178/N00428 S003201/N00431 S003222/N00434 S004485/N00634 S004495/N00635		
F0102.1	MV2	Z-AXIS MOVING SIGNAL	
	S002905/N00396 S002926/N00399 S002945/N00402 S002966/N00405 S003159/N00425 S003180/N00428 S003199/N00431 S003220/N00434 S004505/N00636 S004515/N00637		
F0106.0	MVD1	X-AXIS MOVING DIRECTION SIGNAL	
	S002906/N00396 S002927/N00399 S003160/N00425 S003181/N00428		
F0106.1	MVD2	Z-AXIS MOVING DIRECTION SIGNAL	
	S002948/N00402 S002969/N00405 S003202/N00431 S003223/N00434		
F0264.0	SPWRN1		
	S001726/N00235		
F0264.1	SPWRN2		
	S001725/N00235		
F0264.2	SPWRN3		
	S001724/N00235		
F0264.3	SPWRN4		
	S001723/N00235		
F0264.4	SPWRN5		
	S001722/N00235		
F0264.5	SPWRN6		
	S001721/N00235		
F0264.6	SPWRN7		
	S001720/N00235		
F0264.7	SPWRN8		
	S001719/N00235		
F0265.0	SPWRN9		
	S001718/N00235		

ADDRESS	SYMBOL	FIRST COMMENT	STEP NO./NET NO.
G0004.3	FIN	FINISH SIGNAL	
	S000476/N00049		
G0005.6	AFL	AUX FUNCTION LOCK SIGNAL	
	S000914/N00127	S000927/N00129	
	S000932/N00129		
G0007.1	STLK	START LOCK SIGNAL	
	S000183/N00026		
G0007.2	ST	CYCLE START SIGNAL	
	S000200/N00030	S000848/N00117	
	S000827/N00113		
G0008.4	*_ESP	EMERGENCY STOP SIGNAL	
	S000042/N00005	S000776/N00106	S000859/N00119 S000882/N00122 S000995/N00136
	S001007/N00137	S001486/N00213	S001739/N00238 S002339/N00320 S002351/N00321
	S002447/N00345	S002468/N00346	S002476/N00347 S002485/N00348 S002535/N00357
	S002556/N00362	S002588/N00365	S002599/N00366 S002613/N00368 S002631/N00372
	S003407/N00469	S003430/N00474	S003451/N00478 S003474/N00481 S003631/N00510
	S003640/N00511	S003648/N00515	S003897/N00541 S004401/N00620
	S000040/N00004		
G0008.5	*SP	FEED HOLD SIGNAL	
	S000843/N00116		
	S000238/N00031		
G0008.6	RRW	RESET & REWIND SIGNAL	
	S000107/N00018	S000110/N00019	S000117/N00020 S000118/N00020
	S000122/N00020		
G0018.0	HS1A	MPG (X-AXIS) SELECT	
	S001073/N00147	S001077/N00148	
	S001060/N00145		
G0018.1	HS1B	MPG (Z-AXIS) SELECT	
	S001083/N00149	S001087/N00150	
	S001072/N00146		
G0019.4	MP1	MPG/STEP FEED SELECT - 1	
	S001034/N00142		
G0019.5	MP2	MPG/STEP FEED SELECT - 2	
	S001039/N00143		
G0019.7	RT	MANUAL RAPID JOG SIGNAL	
	S001017/N00139		
G0028.4	*SUCPF	SPINDLE UNCLAMP COMP SIGNAL	
	S004386/N00615		
G0028.5	*SCPF	SPINDLE CLAMP COMP SIGNAL	
	S004389/N00616		
G0028.6	SPSTP	SPINDLE STOP COMPLETE SIGNAL	
	S000447/N00048	S001556/N00217	S001595/N00222 S004376/N00614 S004384/N00615
	S004387/N00616		
	S004383/N00614		
G0029.5	SOR	SPINDLE ORIENTATION SIGNAL	
	S001504/N00214	S001508/N00214	S001591/N00222

ADDRESS	SYMBOL	FIRST COMMENT	STEP NO./NET NO.
G0029.6	*SSTP	SPINDLE STOP SIGNAL	
	S001609/N00224 S002457/N00345 S002523/N00353		
	S001597/N00222		
G0039.0	OFN0	TOOL OFFSET NUMBER - 0	
	S002826/N00392 S003080/N00421		
G0039.1	OFN1	TOOL OFFSET NUMBER - 2	
	S002858/N00393 S003112/N00422		
G0039.2	OFN2	TOOL OFFSET NUMBER - 2	
	S002880/N00394 S003134/N00423		
G0039.3	OFN3	TOOL OFFSET NUMBER - 3	
	S002902/N00395 S003156/N00424		
G0039.7	GOQSM	TOOL OFFSET WRITE MODE	
	S002825/N00392 S002857/N00393 S002879/N00394 S002901/N00395 S002909/N00396		
	S002919/N00397 S002930/N00399 S002940/N00400 S002951/N00402 S002961/N00403		
	S002972/N00405 S002982/N00406 S003079/N00421 S003111/N00422 S003133/N00423		
	S003155/N00424 S003163/N00425 S003173/N00426 S003184/N00428 S003194/N00429		
	S003205/N00431 S003215/N00432 S003226/N00434 S003236/N00435		
	S002794/N00391 S003048/N00420		
G0043.0	MD1	MODE SELECT - 1	
	S000660/N00092		
G0043.1	MD2	MODE SELECT - 2	
	S000662/N00093		
G0043.2	MD4	MODE SELECT - 4	
	S000667/N00094		
G0043.7	ZRN	ZERO RETURN SIGNAL	
	S000724/N00100 S000942/N00132 S000954/N00132 S000958/N00133 S000962/N00133		
	S000966/N00134 S000979/N00134 S000983/N00135 S000987/N00135 S002286/N00316		
	S002298/N00316 S002302/N00317 S002306/N00317 S002310/N00318 S002323/N00318		
	S002327/N00319 S002331/N00319 S002793/N00391 S002908/N00396 S002929/N00399		
	S002950/N00402 S002971/N00405 S003047/N00420 S003162/N00425 S003183/N00428		
	S003204/N00431 S003225/N00434 S003357/N00457 S003368/N00459		
	S000681/N00095		
G0044.0	BDT1	BLOCK SKIP SIGNAL	
	S000920/N00128		
	S000924/N00128		
G0044.1	MLK	M/C LOCK SIGNAL (ALL AXES)	
	S000928/N00129		
	S000933/N00129		
G0046.1	SBK	SINGLE BLOCK SIGNAL	
	S000800/N00110 S002221/N00305		
	S000630/N00085		
G0046.3	KEY1	MEMORY PROTECT SIGNAL	
	S000739/N00101		
G0046.7	DRN	DRY RUN SIHNAL	
	S000915/N00127		
G0061.0	RGTAP	RIGID TAPPING ON O/P	
	S001525/N00215 S001552/N00217 S001570/N00219 S001575/N00220 S001584/N00221		
	S001574/N00219		

ADDRESS	SYMBOL	FIRST COMMENT	STEP NO./NET NO.
G0061.4	RGTSP1	RIGID TAPPING SPINDLE-1 SELECT	
	S001563/N00218		
G0070.4	SRVA	SPINDLE CCW COMMAND SIGNAL	
	S001538/N00216 S001565/N00219 S001567/N00219 S001576/N00220 S001588/N00222		
	S001605/N00224 S001614/N00224 S002629/N00372 S002685/N00376 S003291/N00445		
	S003649/N00515 S003898/N00541 S004463/N00632 S004474/N00633		
	S001529/N00215		
G0070.5	SFRA	SPINDLE CW COMMAND SIGNAL	
	S001511/N00214 S001568/N00219 S001577/N00220 S001589/N00222 S001607/N00224		
	S001615/N00224 S002630/N00372 S002686/N00376 S003292/N00445 S003650/N00515		
	S003899/N00541 S004464/N00632 S004475/N00633		
	S001560/N00217		
G0070.6	ORCMA	SPINDLE ORIENTATION COMMAND	
	S001517/N00214 S001544/N00216 S004348/N00609 S004357/N00610 S004361/N00610		
	S004356/N00609		
G0070.7	MRDYA	MACHINE READY (SPINDLE)	
	S000049/N00005		
G0071.0	ARSTA	ALARM RESET SIGNAL (SPINDLE)	
	S000059/N00008		
G0071.1	*ESPA	EMG STOP SIGNAL (SPINDLE)	
	S000052/N00006		
G0100.0	+J1	+X JOG SIGNAL	
	S000956/N00132 S002300/N00316		
G0100.1	+J2	+Z JOG SIGNAL	
	S000981/N00134 S002325/N00318		
G0102.0	-J1	-X JOG SIGNAL	
	S000964/N00133 S002308/N00317		
G0102.1	-J2	-Z JOG SIGNAL	
	S000989/N00135 S002333/N00319		
G0126.0	SVF1	X - SERVO OFF SIGNAL	
	S000019/N00002		
G0126.1	SVF2	Z-SERVO OFF SIGNAL	
	S000036/N00003		
G0130.0	*IT1	INTERLOCK SIGNAL FOR X AXIS	
	S002181/N00299		
G0130.1	*IT2	INTERLOCK SIGNAL FOR Z AXIS	
	S002196/N00300		
G0130.2	*IT3	INTERLOCK SIGNAL FOR 3RD AXIS	
	S002182/N00299		
G0130.3	*IT4	INTERLOCK SIGNAL FOR4TH AXIS	
	S002183/N00299		
G0323.0	SWDBS1	SWDBS1	
	S000433/N00048 S000439/N00048 S002198/N00301		
	S002201/N00301		
G0323.1	SWDBS2	SWDBS2	
	S000436/N00048 S000442/N00048 S002203/N00302		
	S002206/N00302		

ADDRESS	SYMBOL	FIRST COMMENT	STEP NO./NET NO.
R0500.0	U01PUL	MACRO OUTPUT I PULSE RELAY	
	S004021/N00557 S004163/N00582 S004177/N00584 S004191/N00586 S004205/N00588		
	S004219/N00590 S004233/N00592 S004247/N00594 S004261/N00596 S004275/N00598		
	S004289/N00600 S004303/N00602 S004317/N00604		
	S004033/N00558		
R0500.1	U02PUL	MACRO O/P 1 PULSE RELAY	
	S004022/N00557 S004164/N00582 S004178/N00584 S004192/N00586 S004206/N00588		
	S004220/N00590 S004234/N00592 S004248/N00594 S004262/N00596 S004276/N00598		
	S004290/N00600 S004304/N00602 S004318/N00604		
	S004041/N00560		
R0500.2	U03PUL	MACRO OUTPUT I PULSE RELAY	
	S004023/N00557 S004165/N00582 S004179/N00584 S004193/N00586 S004207/N00588		
	S004221/N00590 S004235/N00592 S004249/N00594 S004263/N00596 S004277/N00598		
	S004291/N00600 S004305/N00602 S004319/N00604		
	S004049/N00562		
R0500.3	U04PUL	MACRO OUTPUT I PULSE RELAY	
	S004024/N00557 S004166/N00582 S004180/N00584 S004194/N00586 S004208/N00588		
	S004222/N00590 S004236/N00592 S004250/N00594 S004264/N00596 S004278/N00598		
	S004292/N00600 S004306/N00602 S004320/N00604		
	S004057/N00564		
R0500.4	U05PUL	MACRO OUTPUT I PULSE RELAY	
	S004025/N00557 S004167/N00582 S004181/N00584 S004195/N00586 S004209/N00588		
	S004223/N00590 S004237/N00592 S004251/N00594 S004265/N00596 S004279/N00598		
	S004293/N00600 S004307/N00602 S004321/N00604		
	S004065/N00566		
R0500.5	U06PUL	MACRO OUTPUT I PULSE RELAY	
	S004026/N00557 S004168/N00582 S004182/N00584 S004196/N00586 S004210/N00588		
	S004224/N00590 S004238/N00592 S004252/N00594 S004266/N00596 S004280/N00598		
	S004294/N00600 S004308/N00602 S004322/N00604		
	S004073/N00568		
R0501.0	U01REL	RELAY FOR 1 PULSE	
	S004032/N00558 S004036/N00559		
	S004038/N00559		
R0501.1	U02REL	RELAY FOR 1 PULSE	
	S004040/N00560 S004044/N00561		
	S004046/N00561		
R0501.2	U03REL	RELAY FOR 1 PULSE	
	S004048/N00562 S004052/N00563		
	S004054/N00563		
R0501.3	U04REL	RELAY FOR 1 PULSE	
	S004056/N00564 S004060/N00565		
	S004062/N00565		
R0501.4	U05REL	RELAY FOR 1 PULSE	
	S004064/N00566 S004068/N00567		
	S004070/N00567		
R0501.5	U06REL	RELAY FOR 1 PULSE	
	S004072/N00568 S004076/N00569		
	S004078/N00569		
R0502.0	T01WRN	TOOL 1 WORNOUT RELAY	
	S004169/N00582 S004172/N00583		
	S004171/N00582		

ADDRESS	SYMBOL	FIRST COMMENT	STEP NO./NET NO.
R0502.1	T02WRN	TOOL 2 WORNOUT RELAY	
	S004183/N00584	S004186/N00585	
	S004185/N00584		
R0502.2	T03WRN	TOOL 3 WORNOUT RELAY	
	S004197/N00586	S004200/N00587	
	S004199/N00586		
R0502.3	T04WRN	TOOL 4 WORNOUT RELAY	
	S004211/N00588	S004214/N00589	
	S004213/N00588		
R0502.4	T05WRN	TOOL 5 WORNOUT RELAY	
	S004225/N00590	S004228/N00591	
	S004227/N00590		
R0502.5	T06WRN	TOOL 6 WORNOUT RELAY	
	S004239/N00592	S004242/N00593	
	S004241/N00592		
R0502.6	T07WRN	TOOL 7 WORNOUT RELAY	
	S004253/N00594	S004256/N00595	
	S004255/N00594		
R0502.7	T08WRN	TOOL 8 WORNOUT RELAY	
	S004267/N00596	S004270/N00597	
	S004269/N00596		
R0503.0	T09WRN	TOOL 9 WORNOUT RELAY	
	S004281/N00598	S004284/N00599	
	S004283/N00598		
R0503.1	T10WRN	TOOL 10 WORNOUT RELAY	
	S004295/N00600	S004298/N00601	
	S004297/N00600		
R0503.2	T11WRN	TOOL 11 WORNOUT RELAY	
	S004309/N00602	S004312/N00603	
	S004311/N00602		
R0503.3	T12WRN	TOOL 12 WORNOUT RELAY	
	S004323/N00604	S004326/N00605	
	S004325/N00604		
R0503.4	TLFHLD	TOOL WORNOUT,FEED HOLD	
	S000216/N00030		
	S004343/N00606		
R0503.5	TLALDL	TOOL LIFE ALARM DELAY	
	S004035/N00559	S004043/N00561	S004051/N00563 S004059/N00565 S004067/N00567
	S004075/N00569		
	S004030/N00557		
R0560.5			
	S001211/N00171		
R0561.5			
	S001212/N00171		
R0592.0		ADD ERROR	
	S001181/N00166		
R0592.1		ADD ERROR	
	S001189/N00167		

ADDRESS	SYMBOL	FIRST COMMENT	STEP NO./NET NO.
R0592.2		ADD ERORR	
	S001197/N00168		
R0592.3		ADD ERROR	
	S001205/N00169		
R0592.4		WINDOW READ ERROR	
	S001206/N00170		
	S001210/N00170		
R0592.5		RESERVED	
	S001214/N00172 S001218/N00172		
	S001213/N00171		
R0592.6	THNDIS	TWO-HAND CYCLE START DISABLE	
	S000772/N00105		
	S000761/N00104		
R0592.7	NXTSTL	NEXT CYCLE ENABLE RELAY	
	S000791/N00109 S000808/N00111		
	S000794/N00109		
R0593.0		RESERVED	
	S000790/N00109		
	S000786/N00107		
R0593.1		RESERVED	
	S000785/N00107		
	S000789/N00108		
R0600.0	LOGIC1	LOGIC HIGH	
	S000001/N00001 S000002/N00001 S000239/N00032 S000762/N00105 S000763/N00105		
	S001129/N00160 S001137/N00161 S001145/N00162 S001153/N00163 S001161/N00164		
	S001174/N00166 S001175/N00166 S001182/N00167 S001183/N00167 S001190/N00168		
	S001191/N00168 S001198/N00169 S001199/N00169 S001222/N00173 S001243/N00177		
	S001245/N00178 S001247/N00179 S001249/N00180 S001251/N00181 S001253/N00182		
	S001255/N00183 S001256/N00183 S001334/N00190 S001336/N00191 S001338/N00192		
	S001340/N00193 S001342/N00194 S001343/N00194 S001366/N00195 S001367/N00195		
	S001390/N00196 S001391/N00196 S001426/N00200 S001428/N00201 S001430/N00202		
	S001432/N00203 S001434/N00204 S001436/N00205 S001437/N00205 S001452/N00206		
	S001455/N00207 S001562/N00218 S001770/N00243 S001782/N00245 S001835/N00253		
	S001846/N00258 S001885/N00264 S001886/N00264 S001887/N00264 S001888/N00264		
	S001898/N00265 S001899/N00265 S001900/N00265 S001901/N00265 S001957/N00273		
	S001958/N00273 S001959/N00273 S001960/N00273 S001973/N00274 S001974/N00274		
	S001975/N00274 S001976/N00274 S001994/N00277 S001997/N00278 S001998/N00278		
	S002017/N00280 S002179/N00299 S002184/N00300 S002364/N00324 S002371/N00326		
	S002378/N00328 S002385/N00330 S002392/N00332 S002412/N00336 S002445/N00345		
	S002446/N00345 S002561/N00363 S002562/N00363 S002637/N00373 S002638/N00373		
	S002639/N00373 S003519/N00488 S003524/N00489 S003546/N00494 S003554/N00495		
	S003562/N00496 S003570/N00497 S003585/N00500 S003659/N00516 S003660/N00516		
	S003907/N00542 S003908/N00542 S004443/N00630 S004444/N00630 S004451/N00631		
	S004452/N00631 S004459/N00632 S004460/N00632 S004470/N00633 S004471/N00633		
	S004481/N00634 S004482/N00634 S004491/N00635 S004492/N00635 S004501/N00636		
	S004502/N00636 S004511/N00637 S004512/N00637 S004521/N00638 S004522/N00638		
	S004532/N00639 S004533/N00639 S004543/N00640 S004544/N00640 S004554/N00641		
	S004555/N00641 S004563/N00642 S004564/N00642 S004572/N00643 S004573/N00643		
	S004582/N00644 S004583/N00644 S004598/N00646 S004599/N00646 S004614/N00648		
	S004615/N00648 S004630/N00650 S004631/N00650 S004646/N00652 S004647/N00652		
	S004662/N00654 S004663/N00654 S004678/N00656 S004679/N00656 S004694/N00658		
	S004695/N00658 S004710/N00660 S004711/N00660 S004726/N00662 S004727/N00662		
	S004742/N00664 S004743/N00664 S004758/N00666 S004759/N00666 S004774/N00668		
	S004775/N00668 S004790/N00670 S004791/N00670 S004806/N00672 S004807/N00672		
	S004822/N00674 S004823/N00674 S004838/N00676 S004839/N00676		
	S000003/N00001		

ADDRESS	SYMBOL	FIRST COMMENT	STEP NO./NET NO.
R0600.1	AU/MDI	AUTO/MDI MODE SELECT RELAY	
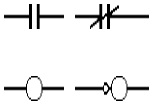	S000220/N00030 S000669/N00095 S000690/N00097 S000740/N00102 S000931/N00129 S001121/N00159 S001515/N00214 S001542/N00216 S001623/N00225 S003626/N00509 S003634/N00511		
	S000686/N00096		
R0600.2	MAN.M	MANUAL MODE	
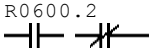	S000685/N00096 S000953/N00132 S000961/N00133 S000978/N00134 S000986/N00135 S001502/N00214 S001534/N00216 S001624/N00225 S001755/N00240 S001921/N00267 S002297/N00316 S002305/N00317 S002322/N00318 S002330/N00319 S002593/N00366 S002603/N00367 S002610/N00368 S002791/N00391 S002907/N00396 S002928/N00399 S002949/N00402 S002970/N00405 S003044/N00420 S003161/N00425 S003182/N00428 S003203/N00431 S003224/N00434 S003630/N00510 S003636/N00511 S003983/N00549 S003990/N00550		
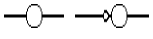	S000691/N00097		
R0601.0	XZRC	X & Z REFERENCE COMPLETE	
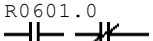	S000727/N00100 S000741/N00102 S001116/N00157 S001120/N00159 S002156/N00295		
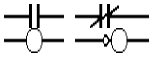	S000737/N00100		
R0601.1	AURDY	AUTO READY	
	S000751/N00103 S000821/N00113 S000881/N00122 S001500/N00214 S001505/N00214 S001532/N00216 S002222/N00305 S002474/N00347 S002483/N00348 S003290/N00445		
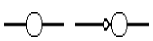	S000746/N00102		
R0601.2	M0/M01	M00/M01 SELECT	
	S000227/N00031 S001513/N00214 S001540/N00216 S001592/N00222		
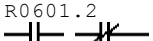	S000752/N00103		
R0601.3	2HDCYC	2 HAND CYCLE START	
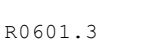	S000767/N00105 S000770/N00105 S000797/N00110		
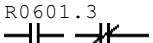	S000775/N00105		
R0601.4	RESET	RESET RELAY	
	S000085/N00013 S000092/N00014 S000195/N00029 S000224/N00030 S000475/N00049 S000764/N00105 S000817/N00112 S000830/N00114 S000936/N00130 S001124/N00159 S001465/N00210 S001474/N00211 S001487/N00213 S001573/N00219 S001590/N00222 S001631/N00225 S001653/N00227 S001740/N00238 S001758/N00240 S001875/N00262 S001925/N00267 S001932/N00268 S001949/N00270 S002038/N00282 S002049/N00283 S002122/N00290 S002131/N00291 S002176/N00298 S002200/N00301 S002205/N00302 S002512/N00352 S002680/N00376 S002709/N00378 S002732/N00380 S002751/N00382 S002774/N00386 S002781/N00387 S003034/N00415 S003288/N00444 S003324/N00450 S003625/N00509 S003632/N00510 S003697/N00518 S003829/N00530 S003841/N00531 S004350/N00609 S004367/N00611 S004378/N00614 S004392/N00617		
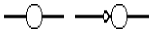	S000782/N00106		
R0601.6	PCSS	PROGRAM CONTROL SWITCH SELECT	
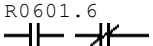	S000917/N00128 S000926/N00129		
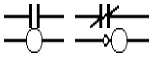	S000912/N00126		
R0601.7	M0FIN	M00/M01/M02/M30 FIN	
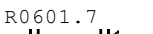	S000352/N00048		
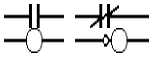	S000856/N00117		
R0602.6	EMGOFF	EMG. OFF DELAY	
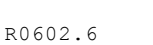	S000047/N00005		
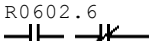	S000057/N00007		
R0602.7	FEDHLD	FEED HOLD INITIATE	
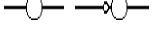	S000199/N00030 S000226/N00031		
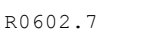	S000225/N00030		

ADDRESS	SYMBOL	FIRST COMMENT	STEP NO./NET NO.
R0603.0	TINS	TURRET INDEX START	
	S000221/N00030 S000245/N00033 S000258/N00034 S000273/N00036 S000952/N00132		
	S000960/N00133 S000977/N00134 S000985/N00135 S001747/N00239 S001872/N00262		
	S001880/N00263 S001911/N00266 S001938/N00270 S001962/N00273 S001978/N00274		
	S002000/N00278 S002013/N00279 S002296/N00316 S002304/N00317 S002321/N00318		
	S002329/N00319		
	S001861/N00259		
R0603.1	TUR_OK	TURRET INITIAL CONDITIONS OK	
	S000255/N00034 S000274/N00036 S000298/N00039 S000307/N00040 S001856/N00259		
	S001881/N00263		
	S001745/N00238		
R0603.2	TC>T12	TOOL COMMAND > 12	
	S001743/N00238 S001859/N00259 S001935/N00269		
	S001781/N00244		
R0603.3	TC>T08	TOOL COMMAND > 8	
	S001744/N00238 S001860/N00259 S001936/N00269		
	S001793/N00246		
R0603.4	JOGIND	JOG INDEX START	
	S000252/N00034 S000289/N00038 S000297/N00039 S000333/N00045 S001750/N00239		
	S001754/N00240 S001763/N00241 S001768/N00242 S001873/N00262 S001943/N00270		
	S001760/N00240		
R0603.5	JUCLPH	JOG INDEX UNCLAMP HOLD	
	S000291/N00038 S001762/N00241 S001944/N00270		
	S001765/N00241		
R0603.6	JCLPH	JOG INDEX CLAMP HOLD	
	S001764/N00241		
	S001769/N00242		
R0603.7	JINCOM	TURRET JOG INDEX COMPLETE	
	S000257/N00034 S000302/N00039 S001759/N00240		
	S000293/N00038		
R0604.0	TICOM	TURRET INDEX COMPLETE	
	S000256/N00034 S000285/N00037 S000301/N00039 S000310/N00040 S000312/N00041		
	S001749/N00239 S001857/N00259 S002011/N00279		
	S000288/N00037		
R0604.1	TCLHLD	TURRET CLAMP HOLD	
	S000260/N00035 S000277/N00037 S001863/N00260 S001940/N00270		
	S001865/N00260		
R0604.2	TUNHLD	TURRET UNCLAMP HOLD	
	S000263/N00035 S000278/N00037 S000280/N00037 S001941/N00270		
	S000265/N00035		
R0604.3	CIO	COINCIDENCE RELAY	
	S000253/N00034 S000261/N00035 S000272/N00036 S001868/N00261 S001939/N00270		
	S000259/N00034		
R0604.4	TF/RHD	TURRET FWD/REV HOLD	
	S000279/N00037 S000281/N00037 S001869/N00261 S001942/N00270		
	S001871/N00261		
R0604.5	TCOMHD	TURRET INDEX COMPLETE HOLD	
	S000313/N00041 S000316/N00042		
	S000315/N00041		

ADDRESS	SYMBOL	FIRST COMMENT	STEP NO./NET NO.
R0604.6	T0/MCH	T00 / SAME TOOL	
	S000283/N00037		
	S000276/N00036		
R0604.7	TFIN	TFIN DELAY	
	S000287/N00037 S000324/N00043 S000473/N00049 S001748/N00239 S001858/N00259		
	S000319/N00042		
R0605.2	XZSAFE	TURRET IN SAFE ZONE	
	S001742/N00238 S001756/N00240 S001927/N00267		
	S001738/N00237		
R0605.3	1PLCNC	1 PULSE WITH CNC ON	
	S001476/N00212 S003514/N00487		
	S001454/N00206		
R0605.4	PLRCNC	PULSE RELAY WITH CNC ON	
	S001453/N00206		
	S001456/N00207		
R0605.5	PGRST1	PROGRAM RESET W/O RWD SIGNAL	
	S000108/N00018		
	S000111/N00019		
R0605.6	PGRST2	SIGNAL TO REVOKE PRG.RWD	
	S000121/N00020		
	S000109/N00018		
R0605.7	M3/4FN	M03/M04/M05 FIN	
	S000356/N00048		
	S001620/N00224		
R0606.0		RESERVED	
	S001710/N00234		
	S001709/N00233		
R0606.1		RESERVED	
	S001728/N00236		
	S001727/N00235		
R0606.2	TQFWFL	T.S. QUILL FWD FLAG - 1	
	S003981/N00549 S003993/N00551 S004001/N00552		
	S003985/N00549		
R0606.3	TQRTFL	T.S. QUILL RET FLAG - 1	
	S003988/N00550 S003995/N00551 S004004/N00552		
	S003992/N00550		
R0606.4	QUMISS	T.S. QUILL NOT IN HOME POS	
	S000815/N00112		
	S004013/N00553		
R0606.5	RSTHLD	RESET HOLD FOR EOM LAMP	
	S000873/N00121 S000876/N00122		
	S000875/N00121		
R0606.6		RESERVED	
	S000114/N00020		
	S000125/N00021		
R0606.7		RESERVED	
	S000124/N00021		
	S000127/N00022		

ADDRESS	SYMBOL	FIRST COMMENT	STEP NO./NET NO.
R0607.0	EDIT.M	EDIT MODE SELECT	
	S000088/N00014	S000655/N00092 S000661/N00093 S001642/N00226	
	S000625/N00084		
R0607.1	ASBK.M	AUTO SINGLE BLOCK SELECT	
	S000656/N00092		
	S000629/N00085		
R0607.2	AUTO.M	AUTO CONTINUOUS SELECT	
	S000096/N00015	S000657/N00092 S000809/N00111	
	S000634/N00086		
R0607.3	MDI.M	MDI MODE SELECT	
	S000089/N00014		
	S000638/N00087		
R0607.4	STEPX.M	STEP(MPG) - X SELECT	
	S000663/N00094	S001049/N00145 S001234/N00175 S001239/N00176	
	S000642/N00088		
R0607.5	STEPZ.M	STEP(MPG) - Z SELECT	
	S000664/N00094	S001061/N00146 S001235/N00175 S001240/N00176	
	S000646/N00089		
R0607.6	JOG.M	JOG MODE SELECT	
	S000658/N00092	S000665/N00094 S000680/N00095	
	S000650/N00090		
R0607.7	ZRN.M	ZERO RETURN SELECT	
	S000659/N00092	S000666/N00094 S000668/N00095	
	S000654/N00091		
R0609.0	SPNCTR	SPINDLE ON COUNTER	
	S001479/N00212	S001521/N00215 S001548/N00217 S001593/N00222	
	S001484/N00212		
R0609.1	SPNHTY	SPINDLE HEALTHY	
	S001510/N00214	S001527/N00215 S001537/N00216 S001554/N00217 S004351/N00609	
	S004379/N00614		
	S001498/N00213		
R0609.5	SORCOM	SPINDLE ORIENTATION COMPLETE	
	S000418/N00048		
	S004364/N00610		
R0609.6	PSPRST	PULSE SP RST DOOR OPEN	
	S001459/N00208		
	S001463/N00209		
R0609.7	SPRST	SP RESET DOOR OPEN	
	S001481/N00212		
	S001460/N00208		
R0610.0	M8HOLD	M08 HOLD RELAY	
	S000362/N00048		
R0610.2	PRTCOM	PARTS CATCHER FUNCTION COMP	
	S000367/N00048	S002438/N00342	
	S002435/N00341		
R0610.4	LUCNON	LUB MOTOR/PR SW CONT ON RELAY	
	S003459/N00479	S003467/N00480 S003473/N00481	
	S003466/N00479		

ADDRESS	SYMBOL	FIRST COMMENT	STEP NO./NET NO.
R0610.5	M7HOLD	M07 HOLD	
	S000359/N00048 S003623/N00509 S003635/N00511 S003642/N00512		
	S003627/N00509		
R0610.6	JGCLNT	COOLANT ENABLE IN MANUAL MODE	
	S003629/N00510 S003637/N00511		
	S003633/N00510		
R0610.7	LBLORL	LUB PR. LOW RELAY	
	S003439/N00476 S003446/N00477 S003472/N00481		
	S003445/N00476		
R0611.0	LUBHLT	LUBRICATION HEALTHY RELAY	
	S003414/N00471 S003419/N00472 S003482/N00482		
	S003410/N00469		
R0611.1		RESERVED	
	S003553/N00494 S003561/N00495 S003569/N00496 S003577/N00497 S003592/N00500		
R0611.2	PLPON	PULSE RELAY FOR POWER ON	
	S003480/N00482 S003616/N00506		
	S003618/N00506		
R0611.3	1PLUPB	1 PULSE WITH LUB INCH PB	
	S003424/N00473 S003478/N00482 S003495/N00485		
	S003418/N00471		
R0611.4	PLLUPB	PULSE RELAY FOR LUB PB	
	S003416/N00471		
	S003422/N00472		
R0611.5	1PLUIN	1 PULSE WITH LUB INITIATE	
	S003429/N00474 S003479/N00482		
	S003428/N00473		
R0611.6	PLLUIN	PULSE RELAY WITH LUB INTERVAL	
	S003425/N00473		
	S003431/N00474		
R0611.7	LUPRON	LUB ON WITH PR. SENSING	
	S003483/N00482 S003607/N00505		
	S003436/N00475		
R0612.0	TQHLTY	T.S. QUILL HEALTHY	
	S003904/N00541 S003914/N00542 S003944/N00545 S003957/N00546		
	S003906/N00541		
R0612.1	TQACT1	T.S. QUILL ACTUATION - 1	
	S003930/N00544 S003941/N00545 S003954/N00546 S003979/N00549 S003986/N00550		
	S004006/N00553 S004008/N00553		
	S003928/N00543		
R0612.2	TQACT2	T.S. QUILL ACTUATION - 2	
	S003942/N00545 S003955/N00546		
	S003935/N00544		
R0612.7	LUONRL	LUB ON RELAY	
	S003481/N00482 S003489/N00484 S003494/N00485		
	S003484/N00482		
R0613.0	TSQCOM	T.S. QUILL FUNCTION COMP	
	S000378/N00048 S000459/N00048 S000464/N00048 S003962/N00547		
	S003978/N00548		

ADDRESS	SYMBOL	FIRST COMMENT	STEP NO./NET NO.
R0613.3	REVDLY	CONVEYOR REV DELAY RELAY	
	S002574/N00364	S002587/N00365 S002612/N00368	
	S002607/N00367		
R0613.4	CPONDL	CONVEYOR ON DELAY	
	S002543/N00359	S002592/N00366	
	S002542/N00358		
R0613.5	CHIPON	CHIP CONVEYOR ON RELAY	
	S002539/N00358	S002591/N00366	
	S002538/N00357		
R0613.6	CPOFDL	CONVEYOR OFF DELAY RELAY	
	S002536/N00357		
	S002546/N00359		
R0613.7	CIONDL	CHIP CONVEYOR INITIAL DLY	
	S002537/N00357		
	S002532/N00356		
R0614.2	CHMFIN	CHUCK FUNCTION FIN	
	S000374/N00048	S000453/N00048 S000463/N00048	
	S003854/N00532		
R0614.3	MFIN	COMBINE MFIN RELAY	
	S000469/N00049		
	S000466/N00048		
R0614.4		RESERVED	
	S003612/N00506		
	S003584/N00499		
R0614.5		RESERVED	
	S003613/N00506		
	S003599/N00502		
R0615.0	CHKHLT	CHUCK HEALTHY	
	S003354/N00457	S003652/N00515 S003670/N00516 S003718/N00520 S003739/N00521	
	S003761/N00522	S003782/N00523	
	S003658/N00515		
R0615.1	CKACT1	CHUCK ACTUATION - 1	
	S003683/N00516	S003689/N00517 S003710/N00520 S003731/N00521 S003753/N00522	
	S003774/N00523		
	S003687/N00516		
R0615.2	CKACT2	CHUCK ACTUATION - 2	
	S003711/N00520	S003732/N00521 S003754/N00522 S003775/N00523	
	S003694/N00517		
R0615.3		RESERVED	
	S003614/N00506		
	S003606/N00504		
R0615.6	CKO/R	CHUCK SIGNAL O/R ON	
	S003656/N00515	S003696/N00518 S003714/N00520 S003735/N00521 S003757/N00522	
	S003778/N00523	S003827/N00530 S003839/N00531	
	S003699/N00518		
R0615.7	CKONDL	CHUCK SOL. ON DELAY	
	S003826/N00530	S003838/N00531	
	S003825/N00529		

ADDRESS	SYMBOL	FIRST COMMENT	STEP NO./NET NO.
R0616.1		RESERVED	
	S003809/N00527		
	S003808/N00526		
R0616.2	CCLPID	CHUCK CLAMP ID	
	S003713/N00520	S003737/N00521	S003790/N00524
	S003725/N00520		
R0616.3	CDLPID	CHUCK DECLAMP ID	
	S003716/N00520	S003734/N00521	S003794/N00525
	S003746/N00521		
R0616.4	CCLPOD	CHUCK CLAMP OD	
	S003756/N00522	S003780/N00523	S003795/N00525
	S003768/N00522		
R0616.5	CDLPOD	CHUCK DECLAMP OD	
	S003759/N00522	S003777/N00523	S003791/N00524
	S003789/N00523		
R0616.6	CKCOM1	CHUCK FUN COMPLETE - 1	
	S003813/N00528	S003822/N00529	S003850/N00532
	S003812/N00527		
R0616.7	CKCOM2	CHUCK FUN COMPLETE - 2	
	S003721/N00520	S003742/N00521	S003764/N00522 S003785/N00523
	S003819/N00528		
R0617.2	DRACT1	DOOR OPEN RELAY	
	S002455/N00345	S002467/N00346	S002487/N00349 S002491/N00350
	S002460/N00345		
R0617.3	DRACT2	DOOR CLOSE RELAY	
	S002464/N00346	S002488/N00349	S002492/N00350
	S002470/N00346		
R0617.4	DROPEN	DOOR OPEN RELAY	
	S002452/N00345	S002454/N00345	S002519/N00353
	S002477/N00347		
R0617.5	DRCLOS	DOOR CLOSE RELAY	
	S002448/N00345	S002465/N00346	S002466/N00346
	S002486/N00348		
R0617.6	DRCOM	DOOR FUNCTION COMPLETE	
	S000382/N00048	S000454/N00048	S000458/N00048 S000462/N00048 S002510/N00352
	S002505/N00351		
R0618.0	TFBIN1	TURRET BIN F/B - 1	
	S001839/N00254		
R0618.1	TFBIN2	TURRET BIN F/B - 2	
	S001841/N00255		
R0618.2	TFBIN4	TURRET BIN F/B - 4	
	S001843/N00256		
R0618.3	TFBIN8	TURRET BIN F/B - 8	
	S001845/N00257		
R0618.4		RESERVED	
	S001847/N00258		
R0618.5		RESERVED	
	S001848/N00258		

ADDRESS	SYMBOL	FIRST COMMENT	STEP NO./NET NO.
R0618.6		RESERVED	
	S001849/N00258		
R0618.7		RESERVED	
	S001850/N00258		
R0619.0	ACTDL	ACTUATION DELY	
	S001753/N00240 S002451/N00345 S002462/N00346 S003417/N00471 S003421/N00472 S003441/N00476 S003461/N00479		
	S002213/N00303		
R0620.0	PWSAV1	POWER SAVE INITIATE -1	
	S001646/N00227		
	S001645/N00226		
R0620.1	PWSAV2	POWER SAVE INITIATE -2	
	S001656/N00228		
	S001655/N00227		
R0620.2	DOOR+CHUCK1	DOOR+CHUCK CLOSE	
	S000451/N00048 S002480/N00348 S002500/N00351 S003681/N00516 S003706/N00520 S003749/N00522 S003816/N00528 S003849/N00532		
	S002247/N00307		
R0620.3	DOOR+CHUCK2	DOOR+CHUCK OPEN	
	S000452/N00048 S002264/N00312 S003667/N00516 S003727/N00521 S003770/N00523 S003817/N00528 S003848/N00532		
	S002251/N00308		
R0620.4	DOOR+QUILL1	DOOR CLOSE+QUILL FWD	
	S000456/N00048 S002481/N00348 S002501/N00351 S003920/N00542 S003937/N00545 S003969/N00548		
	S002255/N00309		
R0620.5	DOOR+QUILL2	DOOR OPEN+QUILL RET	
	S000457/N00048 S002265/N00312 S003910/N00542 S003949/N00546 S003973/N00548		
	S002259/N00310		
R0620.6	DOOR+CHUCK+QUILL	DOOR OPEN CHUCK DLP QUILL RET	
	S000461/N00048 S002266/N00312 S003818/N00528 S003847/N00532 S003911/N00542 S003950/N00546 S003974/N00548		
	S002263/N00311		
R0620.7	DOOROP	DOOR OPEN M48	
	S002472/N00347 S002496/N00351		
	S002267/N00312		
R0621.0	TCBIN1	TOOL COMMAND BIN-1	
	S001804/N00252 S001808/N00252 S001813/N00252 S001818/N00252 S001823/N00252 S001828/N00252		
	S001795/N00247		
R0621.1	TCBIN2	TOOL COMMAND BIN-2	
	S001805/N00252 S001809/N00252 S001814/N00252 S001819/N00252 S001824/N00252 S001829/N00252		
	S001797/N00248		
R0621.2	TCBIN4	TOOL COMMAND BIN-4	
	S001806/N00252 S001810/N00252 S001815/N00252 S001820/N00252 S001825/N00252 S001830/N00252		
	S001799/N00249		

ADDRESS	SYMBOL	FIRST COMMENT	STEP NO./NET NO.
R0621.3	TCBIN8	TOOL COMMAND BIN-8	
	S001807/N00252	S001811/N00252 S001816/N00252 S001821/N00252 S001826/N00252	
	S001831/N00252		
	S001801/N00250		
R0621.4	TCSRTB	TOOL COMMAND STROBE	
	S001803/N00251		
R0621.5	TCPRTY	TOOL COMMAND PARITY	
	S001834/N00252		
R0621.6		RESERVED	
	S001836/N00253		
R0621.7	T-HOME	RESERVED	
	S001837/N00253		
R0622.2	SPINI	SHORTEST PATH INITIATE	
	S001889/N00264	S001902/N00265 S001912/N00266	
	S001884/N00263		
R0622.3	SPATH1	SHORTER PATH (12 STATION)	
	S000295/N00039	S000304/N00040	
	S001897/N00264		
R0622.4	SPATH2	SHORTER PATH (8 STATION)	
	S000296/N00039	S000305/N00040	
	S001910/N00265		
R0622.5	TINDST	TOOL INDEX START	
	S000294/N00039	S000306/N00040 S001913/N00266	
	S001915/N00266		
R0624.0	SSARDL	SAR DELAY (ON TIME MONITOR)	
	S001610/N00224		
	S001603/N00223		
R0625.0	TBHLTY	T.S. BODY HEALTHY	
	S002634/N00372	S002641/N00373 S002650/N00374 S002659/N00375 S002689/N00376	
	S002636/N00372		
R0625.1	TBFWD1	T.S. BODY FWD ACTUATION - 1	
	S002652/N00374	S002663/N00375	
	S002648/N00373		
R0625.2	TBFWD2	T.S. BODY FWD ACTUATION - 2	
	S002661/N00375	S002668/N00376 S002670/N00376 S002697/N00378 S002720/N00380	
	S002657/N00374		
R0625.3	TBRET1	T.S. BODY RET ACTUATION - 1	
	S002669/N00376	S002671/N00376 S002698/N00378 S002721/N00380	
	S002667/N00375		
R0625.4	TBCND1	T.S. BODY FWD CONDITION	
	S002702/N00378	S002712/N00379 S002725/N00380 S002735/N00381 S002743/N00382	
	S002711/N00378		
R0625.5	TBCND2	T.S. BODY RET CONDITION	
	S002703/N00378	S002713/N00379 S002726/N00380 S002736/N00381 S002746/N00382	
	S002734/N00380		
R0625.6	TBPOS	T.S. BODY POSITION REACHED	
	S002683/N00376	S002707/N00378 S002730/N00380 S002750/N00382 S002757/N00383	
	S002779/N00387		
	S002756/N00382		

ADDRESS	SYMBOL	FIRST COMMENT	STEP NO./NET NO.
R0625.7	TBCOM	T.S. BODY FUNCTION COMPLETE	
	S000392/N00048 S002684/N00376 S002708/N00378 S002731/N00380 S002754/N00382 S002759/N00383 S002762/N00384		
	S002761/N00383		
R0626.0	TBCHLD	T.S. BODY FUNCTION COMP HOLD	
	S002760/N00383		
	S002766/N00384		
R0626.1	TBUFLT	T.S. BODY UNCLAMP FAULT	
	S002772/N00386		
	S002771/N00385		
R0626.6	SRVA1	SPINDLE CW ENABLE RELAY	
	S001507/N00214 S001520/N00215		
	S001519/N00214		
R0626.7	SFRA1	SPINDLE ENABLE CCW RELAY	
	S001536/N00216 S001547/N00217		
	S001546/N00216		
R0627.0	CCRVIN	CONVEYOR REV INCH INHIBIT	
	S002615/N00368 S002620/N00369		
	S002622/N00369		
R0627.1	CCRVST	CC REVERSE START	
	S002548/N00360 S002550/N00361 S002567/N00363 S002585/N00365 S002604/N00367 S002611/N00368		
	S002590/N00365		
R0627.2	CCTRTM	COVEYOR TRIP TIME COUNT	
	S002551/N00361 S002555/N00362		
	S002554/N00361		
R0627.3	CCFRST	CONVEYOR FWD-REV STOP DELAY	
	S002552/N00361 S002563/N00363		
	S002560/N00362		
R0627.4	CCTRP3	CONVEYOR TRIP 3 TIMES IN 1 MIN	
	S002553/N00361 S002557/N00362 S002564/N00363 S002572/N00364 S002589/N00365		
	S002571/N00363		
R0628.0	+XOFRL	+X OFFSET WRITE RELAY	
	S002988/N00408 S003007/N00412 S003013/N00412 S003021/N00414 S003242/N00437 S003261/N00441 S003267/N00441 S003275/N00443		
	S002991/N00408 S003245/N00437		
R0628.1	-XOFRL	-X OFFSET WRITE RELAY	
	S002993/N00409 S003008/N00412 S003014/N00412 S003022/N00414 S003247/N00438 S003262/N00441 S003268/N00441 S003276/N00443		
	S002996/N00409 S003250/N00438		
R0628.2	+ZOFRL	+Z OFFSET WRITE RELAY	
	S002998/N00410 S003009/N00412 S003011/N00412 S003023/N00414 S003252/N00439 S003263/N00441 S003265/N00441 S003277/N00443		
	S003001/N00410 S003255/N00439		
R0628.3	-ZOFRL	-Z OFFSET WRITE RELAY	
	S003003/N00411 S003010/N00412 S003012/N00412 S003024/N00414 S003257/N00440 S003264/N00441 S003266/N00441 S003278/N00443		
	S003006/N00411 S003260/N00440		

ADDRESS	SYMBOL	FIRST COMMENT	STEP NO./NET NO.
R0628.4	TLRFHD	TOOL PROBE COMPLETE	
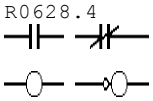	S002989/N00408 S002994/N00409 S002999/N00410 S003004/N00411 S003243/N00437 S003248/N00438 S003253/N00439 S003258/N00440 S003031/N00414 S003285/N00443		
R0628.5	TLPRB1	TOOL PROBING INCOMPLETE RELAY	
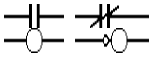	S003018/N00413 S003272/N00442 S003017/N00412 S003271/N00441		
R0629.0	1S-DLY	1 SECOND DELAY RELAY	
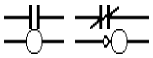	S001170/N00165 S001207/N00170 S001215/N00172 S001228/N00174 S001227/N00173		
R0629.1	DLY-1S	1 SECOND DELAY RELAY	
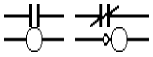	S001223/N00173 S001232/N00174		
R0629.7	DOALM	DO ALARM RELAY	
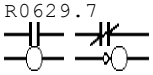	S000137/N00024 S000136/N00023		
R0630.0	SARDLY	SPINDLE SPEED ARRIVAL DELAY	
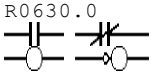	S000192/N00029 S000187/N00027		
R0630.1	LDTDLY	LOAD DETECT SIGNAL DELAY RELAY	
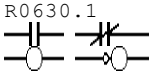	S000193/N00029 S000191/N00028		
R0630.7	RDNXT	READY FOR NEXT CYCLE	
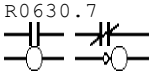	S000874/N00121 S000878/N00122 S000884/N00123 S000892/N00123 S000901/N00124 S000883/N00122		
R0631.0	BDTCYN	CYCLE ON WITH BLOCK DELETE	
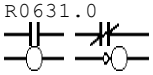	S002137/N00292 S002145/N00294 S002139/N00292		
R0631.1	PCKCYN	CYCLE ON WITH PROGRAM CHECK	
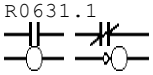	S002142/N00293 S002147/N00294 S002144/N00293		
R0631.3	PSWOFF	BDT/PRG CHK/M_LOCK OFF	
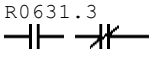	S000702/N00098 S000718/N00099 S000736/N00100 S000934/N00130 S002138/N00292 S002143/N00293 S002151/N00294 S002158/N00295 S002170/N00297 S002153/N00294		
R0631.4	RLEDOF	CANCEL REF LED'S	
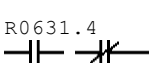	S002157/N00295 S002160/N00296 S002159/N00295		
R0631.5	RE-REF	MACHINE RE-REFERENCED	
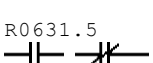	S002152/N00294 S002164/N00296 S002167/N00297 S002171/N00297		
R0631.6	NOTHOM	SLIDES NOT IN HOME POSITION	
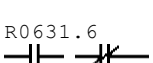	S000703/N00098 S000719/N00099 S002163/N00296 S002166/N00297 S002165/N00296		
R0632.0	+XLACH	+X KEY LATCH	
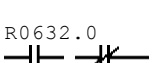	S002904/N00396 S002911/N00397 S003158/N00425 S003165/N00426 S002910/N00396 S003164/N00425		
R0632.1	-XLACH	-X KEY LATCH	
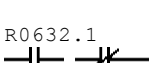	S002925/N00399 S002932/N00400 S003179/N00428 S003186/N00429 S002931/N00399 S003185/N00428		

ADDRESS	SYMBOL	FIRST COMMENT	STEP NO./NET NO.
R0632.2	+ZLACH	+Z KEY LATCH	
	S002946/N00402	S002953/N00403	S003200/N00431 S003207/N00432
	S002952/N00402	S003206/N00431	
R0632.3	-ZLACH	-Z KEY LATCH	
	S002967/N00405	S002974/N00406	S003221/N00434 S003228/N00435
	S002973/N00405	S003227/N00434	
R0632.4	+XITLK	+X OFFSET INTERLOCK	
	S002917/N00397	S003171/N00426	
	S002923/N00398	S003177/N00427	
R0632.5	-XITLK	-X OFFSET INTERLOCK	
	S002938/N00400	S003192/N00429	
	S002944/N00401	S003198/N00430	
R0632.6	+ZITLK	+Z OFFSET INTERLOCK	
	S002959/N00403	S003213/N00432	
	S002965/N00404	S003219/N00433	
R0632.7	-ZITLK	-Z OFFSET INTERLOCK	
	S002980/N00406	S003234/N00435	
	S002986/N00407	S003240/N00436	
R0633.3	TPAROK	TOUCH PROBE ARM OK	
	S003298/N00446	S003304/N00447	
	S003296/N00445		
R0633.4	TPINPO	TOUCH PROBE ARM IN POSITION	
	S003326/N00451		
	S003316/N00448		
R0633.5	TPFAIL	TOUCH PROBE ARM ACTUATION FAIL	
	S003322/N00450		
	S003321/N00449		
R0633.6	TPBYP1	TOUCH PROBE I/L BYPASS - 1	
	S000181/N00026	S003033/N00415	S003037/N00416 S003287/N00444 S003328/N00451
	S003035/N00415	S003289/N00444	
R0633.7	TPMFIN	TOUCH PROBE M-FIN	
	S000406/N00048		
	S003038/N00416	S003330/N00451	
R0635.0	TS-AXS	AXIS/T.S. BODY ALIGNED	
	S003351/N00457	S003380/N00461	
	S003336/N00454		
R0635.1	TSBHLT	T.S. BODY HEALTHY(LT-25)	
	S003353/N00457		
	S003344/N00455		
R0635.2	TSSVOF	T.S. OPRN LT25 (SERVO OFF)	
	S000035/N00003	S000169/N00026	
	S003349/N00456		
R0635.3	TBUNDL	T.S. BODY UNCLAMP DELAY	
	S003365/N00459		
	S003364/N00458		
R0635.4	TSPLOF	TS BODY PLUNGER OFF DELAY	
	S003367/N00459		
	S003376/N00460		

ADDRESS	SYMBOL	FIRST COMMENT	STEP NO./NET NO.
R0635.5	TSFIN	TS BODY FUNCTION FIN (LT25)	
	S000410/N00048		
	S003385/N00461		
R0635.6	FSACT	FOOT SWITCH ACTIVE RELAY	
	S002642/N00373	S002654/N00374	S002664/N00375 S003395/N00465 S003399/N00466
	S003401/N00466	S003672/N00516	S003691/N00517 S003915/N00542 S003932/N00544
	S003397/N00465		
R0635.7	FSFIN	FS ACTIVE/INACTIVE M-FIN	
	S000414/N00048		
	S003403/N00466		
R0639.0	ZCLENG	Z CLUTCH ENGAGE IN PROGRESS	
	S000020/N00003	S000839/N00115	S000968/N00134 S001305/N00186 S001311/N00187
	S001314/N00187	S001319/N00188	S001322/N00188 S001327/N00189 S001330/N00189
	S002047/N00283	S002063/N00285	S002312/N00318
	S002051/N00283		
R0639.1	ZCLCMP	Z CLUTCH ENGEGE COMPLETE	
	S002050/N00283	S002108/N00289	S002132/N00291
	S002073/N00285		
R0640.0	XCLENG	X-AXIS CLUTCH ENGG IN PROGRESS	
	S000004/N00002	S000838/N00115	S000944/N00132 S000969/N00134 S001306/N00186
	S001312/N00187	S001313/N00187	S001320/N00188 S001321/N00188 S001328/N00189
	S001329/N00189	S002036/N00282	S002052/N00284 S002288/N00316 S002313/N00318
	S002040/N00282		
R0640.1	XCLCMP	X CLUTCH ENGAGE COMPLETE	
	S002039/N00282	S002087/N00287	S002123/N00290
	S002062/N00284		
R0643.0	EDTSEL	EDIT MODE SELECTED	
	S000090/N00014	S000097/N00015	
	S000095/N00014		
R0643.1	EDTAUT	EDIT MODE TO AUTO MODE SEL	
	S000093/N00014	S000098/N00015	S000115/N00020 S000781/N00106
	S000101/N00015		
R0643.2	M62LCH	M62 LATCH	
	S000084/N00013	S000091/N00014	S000401/N00048
	S000087/N00013		
R0643.7		NO MESSAGE	
	S000897/N00124		
	S000908/N00125		
R0644.0	NOMSG1	NO MESSAGE-1	
	S000860/N00119	S002399/N00334	
	S002370/N00325		
R0644.1	NOMSG2	NO MESSAGE-2	
	S000861/N00119	S002400/N00334	
	S002377/N00327		
R0644.2	NOMSG3	NO MESSAGE-3	
	S000862/N00119	S002401/N00334	
	S002384/N00329		
R0644.3	NOMSG4	NO MESSAGE-4	
	S000896/N00124	S002402/N00334	
	S002398/N00333		

ADDRESS	SYMBOL	FIRST COMMENT	STEP NO./NET NO.
R0644.4	NOMSG5	NO MESSAGE-5	
	S000863/N00119 S002403/N00334		
	S002391/N00331		
R0644.5	NOMSG6	NO MESSAGE-6	
	S002410/N00335		
	S002404/N00334		
R0644.6	NOMSG7	NO MESSAGE-7	
	S003872/N00535 S003878/N00536 S003884/N00537		
	S002411/N00335		
R0644.7	AMBRL	AMBER LAMP ON MESSAGE	
	S000886/N00123		
	S000902/N00124		
R0645.0	AIRRLY	AIR PRESSURE LOW RELAY	
	S004406/N00621		
	S004405/N00620		
R0646.0	CY_REL	CYCLE START RELAY	
	S000805/N00111 S000811/N00112 S000820/N00113 S001122/N00159		
	S000804/N00110		
R0647.0	AUSTHL	AUTO CYCLE START HOLD	
	S000829/N00114 S003671/N00516 S003690/N00517 S003709/N00520 S003715/N00520		
	S003730/N00521 S003736/N00521 S003752/N00522 S003758/N00522 S003773/N00523		
	S003779/N00523 S003918/N00542 S003931/N00544 S003940/N00545 S003953/N00546		
	S000836/N00114		
R0649.0	WINDOW_READ	WINDOW_READ	
	S003517/N00487 S003530/N00490 S003534/N00491 S003538/N00492 S003542/N00493		
	S003547/N00494 S003555/N00495 S003563/N00496 S003571/N00497 S003578/N00498		
	S003586/N00500 S003593/N00501 S003600/N00503		
	S003533/N00490		
R0649.1	1MIN_PULSE	1MIN_PULSE	
	S003509/N00486 S003515/N00487		
	S003513/N00486		
R0649.3	POWERUP_PULSE	POWERUP_PULSE	
	S003516/N00487 S003529/N00490 S003615/N00506		
	S003518/N00487		
R0651.0	CLFD	FEED RATE O/R CLAMP FLAG	
	S001307/N00186 S001308/N00186 S001315/N00187 S001316/N00187 S001323/N00188		
	S001324/N00188 S001331/N00189 S001332/N00189		
	S001293/N00184		
R0652.0	SPOVCL	SPINDLE OVERRIDE CLAMP FLAG	
	S001415/N00197 S001416/N00197 S001419/N00198 S001420/N00198 S001423/N00199		
	S001424/N00199		
	S001303/N00185		
R0653.0	M29FIN	M29 FINISH DELAY RELAY	
	S000421/N00048		
	S001583/N00220		
R0653.1	RGTCAN	RIGID TAPPING MODE CANCEL FLAG	
	S001526/N00215 S001553/N00217		
	S001587/N00221		
R0656.0	RHTAP	RH TAPPING SELECTION	
	S000427/N00048 S001466/N00210 S001473/N00211 S001551/N00217		
	S001469/N00210		

ADDRESS	SYMBOL	FIRST COMMENT	STEP NO./NET NO.
R0656.1	LHTAP	LH TAPPING SELECTION	
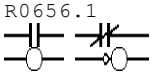	S000430/N00048 S001468/N00210 S001471/N00211 S001524/N00215 S001475/N00211		
R0667.0	LBWTDL	LUB FAULT WATCH DOG DELAY	
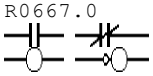	S003448/N00477 S003454/N00478 S003469/N00480 S003488/N00483		
R0667.1	LOWTDL	LUB ON RELAY WATCH DOG DELAY	
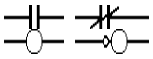	S003497/N00485 S003493/N00484		
R0668.0		RESERVED	
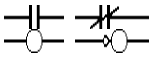	S000327/N00044 S000331/N00045 S000326/N00043		
R0668.1		RESERVED	
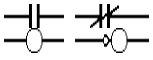	S000332/N00045 S000335/N00046 S000344/N00047 S000334/N00045		
R0670.0	1PLXRF	1 PULSE WITH X-REF INI	
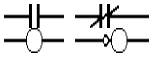	S000825/N00113 S001076/N00147		
R0670.1	PLRXRF	PLR FOR X REF INITIAT	
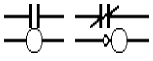	S001075/N00147 S001082/N00148		
R0670.2	XRFINI	X REF INITIATE	
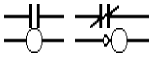	S000993/N00136 S001040/N00144 S001053/N00145 S001097/N00152 S002337/N00320 S001001/N00136 S002345/N00320		
R0670.3	1PLZRF	1 PL WITH Z REF INI	
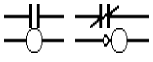	S000826/N00113 S001086/N00149		
R0670.4	PLRZRF	PLR FOR Z REF INI	
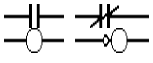	S001085/N00149 S001092/N00150		
R0670.5	ZRFINI	Z REF INITIATE	
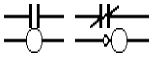	S001005/N00137 S001042/N00144 S001065/N00146 S001093/N00151 S002349/N00321 S001013/N00137 S002357/N00321		
R0670.6	CCTHM1	RELAY TO INITIATE BUTT HOM-1	
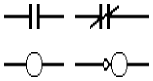	S001130/N00160 S001138/N00161 S001146/N00162 S001154/N00163 S001162/N00164 S001169/N00165 S001119/N00158		
R0670.7	HMINRF	RELAY TO INITIATE BUTT HOM-2	
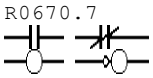	S000424/N00048 S001110/N00155 S001118/N00158 S001111/N00155		
R0671.0	1PLK97	1 PL WITH K9.7	
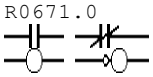	S001107/N00155 S001112/N00156 S001103/N00153		
R0671.1	PLRKP7	PLR FOR K9.7	
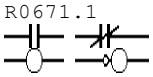	S001102/N00153 S001105/N00154		
R0671.2	DIRDLY	AXES DIR CHANGE DLY RLY	
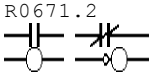	S001056/N00145 S001068/N00146 S001048/N00144		

ADDRESS	SYMBOL	FIRST COMMENT	STEP NO./NET NO.
R0671.3	1PLXCL	1 PL WITH X CLT TRIP	
	S001108/N00155		
	S002080/N00286		
R0671.4	1PLZCL	1 PL WITH Z CLT TRIP	
	S001109/N00155		
	S002101/N00288		
R0672.0	ROV\MP1.RL	RAPID TRAVERSE O/R \ MPG- 1 RL	
	S001030/N00142		
	S001023/N00140		
R0672.1	ROV\MP2.RL	RAPID TRAVERSE O/R \ MPG- 2 RL	
	S001035/N00143		
	S001029/N00141		
R0672.3	VTL	VTL MCP AND COUNTER BALANCE	
	S000938/N00131	S002277/N00314	
	S002276/N00313		
R0673.4	DLYFR	DELY FOR FWD/RET	
	S002718/N00379	S002741/N00381	
	S002696/N00377		
R0673.6	LUBPON	LUBE ON WITH POWER ON	
	S003412/N00470	S003423/N00473	S003617/N00506
	S003413/N00470		
R0692.0		ADD ERROR	
	S001136/N00160		
R0692.1		ADD ERROR	
	S001144/N00161		
R0692.2		ADD ERROR	
	S001152/N00162		
R0692.3		ADD ERROR	
	S001160/N00163		
R0692.4		ADD ERROR	
	S001168/N00164		
R0692.5		WINDOW WRITE ERROR	
	S001173/N00165		
R0700.0	DM03	SPINDLE CW ENABLE M-CODE	
	S000353/N00048	S001499/N00214	S001539/N00216 S001598/N00223 S001604/N00224
	S001621/N00225		
R0700.1	DM04	SPINDLE CCW ENABLE M-CODE	
	S000354/N00048	S001512/N00214	S001531/N00216 S001599/N00223 S001606/N00224
	S001622/N00225		
R0700.2	DM05	SPINDLE DISABLE M-CODE	
	S000355/N00048	S001488/N00213	S001613/N00224 S004352/N00609
R0700.4	DM07	COOLANT ON M-CODE	
	S000358/N00048	S003622/N00509	
R0700.5	DM08	COOLANT-2 ON M-CODE	
	S000361/N00048		
R0700.6	DM09	COOLANT OFF M-CODE	
	S000364/N00048	S003624/N00509	

ADDRESS	SYMBOL	FIRST COMMENT	STEP NO./NET NO.
R0700.7	DM10	CHUCK DECLAMP M-CODE	
	S000370/N00048 S003666/N00516 S003704/N00520 S003726/N00521 S003747/N00522 S003769/N00523 S003814/N00528 S003845/N00532		
R0701.0	DM11	CHUCK CLAMP M-CODE	
	S000369/N00048 S003680/N00516 S003705/N00520 S003728/N00521 S003748/N00522 S003771/N00523 S003815/N00528 S003846/N00532		
R0701.5	DM16	ID CLAMP SELECTION M-CODE	
	S000372/N00048 S003700/N00519 S003852/N00532		
R0701.7	DM18	OD CLAMP SELECTION M-CODE	
	S000373/N00048 S003702/N00519 S003853/N00532		
R0702.0	DM19	SPINDLE ORIENTATION M-CODE	
	S000416/N00048 S000444/N00048 S004347/N00609 S004358/N00610 S004365/N00611 S004375/N00614 S004390/N00617		
R0702.1	DM20	M19 DISABLE	
	S000417/N00048 S000446/N00048 S001557/N00217 S004349/N00609 S004360/N00610 S004377/N00614		
R0703.2	DM29	RIGID TAPPING MODE ON M-CODE	
	S000420/N00048 S001579/N00220		
R0703.5	DM32	T.S. QUILL FWD M-CODE	
	S000376/N00048 S003919/N00542 S003936/N00545 S003947/N00546 S003968/N00548		
R0703.6	DM33	T.S. QUILL RET M-CODE	
	S000377/N00048 S003909/N00542 S003938/N00545 S003948/N00546 S003972/N00548		
R0703.7	DM34	PARTS CATCHER FWD M-CODE	
	S000365/N00048 S002418/N00339 S002423/N00340 S002428/N00341 S002436/N00342		
R0704.0	DM35	PARTS CATCHER RET M-CODE	
	S000366/N00048 S002419/N00339 S002424/N00340 S002431/N00341 S002437/N00342		
R0704.5	DM40	BUTT HOME INI M-CODE	
	S000423/N00048 S001106/N00155		
R0705.1	DM44	LH TAPPING M-CODE	
	S000426/N00048 S001464/N00210 S001472/N00211		
R0705.2	DM45	RH TAPPING M-CODE	
	S000429/N00048 S001467/N00210 S001470/N00211		
R0705.3	DM46	DOOR OPEN M-CODE	
	S000380/N00048 S002242/N00306 S002471/N00347 S002478/N00348 S002495/N00351 S002506/N00352		
R0705.4	DM47	DOOR CLOSE M-CODE	
	S000381/N00048 S002473/N00347 S002479/N00348 S002499/N00351 S002507/N00352		
R0705.5	DM48	DOROPN+QUILRET+CHUCKDCLP M-COD	
	S002248/N00308 S002256/N00310 S002260/N00311 S002508/N00352		
R0705.6	DM49	DOOR+QUILL+CHUCK M-CODE	
	S002244/N00307 S002252/N00309 S002509/N00352		
R0706.4	DM55	CHUCK SIGNAL O/R ON M-CODE	
	S000371/N00048 S003695/N00518 S003851/N00532		
R0706.5	DM56	T.S. QUILL I/L ON FOR CY START	
	S000394/N00048 S004016/N00554		

ADDRESS	SYMBOL	FIRST COMMENT	STEP NO./NET NO.
R0706.6	DM57	T.S. QUILL I/L OFF FOR CY STRT	
	S000397/N00048 S004014/N00554		
R0707.1	DM60	DOOR I/L OFF M-CODE	
	S000384/N00048 S002214/N00304		
R0707.2	DM61	DOOR I/L ON M-CODE	
	S000387/N00048 S002216/N00304		
R0707.3	DM62	EDT-AUT RESET O/R M-CODE	
	S000083/N00013 S000400/N00048		
R0708.3	DM70	FOOT SWITCH ACTIVE M-CODE	
	S000412/N00048 S003394/N00465 S003398/N00466		
R0708.4	DM71	FOOT SWITCH INACTIVE M-CODE	
	S000413/N00048 S003396/N00465 S003400/N00466		
R0709.7	DM82	T.S. BODY FWD/UNCLAMP M-CODE	
	S000390/N00048 S000408/N00048 S002673/N00376 S002676/N00376 S002699/N00378 S002722/N00380 S003345/N00456 S003350/N00457 S003377/N00461		
R0710.0	DM83	T.S. BODY RETRACT/CLAMP M-CODE	
	S000391/N00048 S000409/N00048 S002674/N00376 S002677/N00376 S002700/N00378 S002723/N00380 S003346/N00456 S003355/N00457 S003381/N00461		
R0710.1	DM84	T.P. ARM FWD M-CODE	
	S000403/N00048 S003297/N00446 S003305/N00447 S003309/N00448 S003317/N00449		
R0710.2	DM85	T.P. ARM RET M-CODE	
	S000404/N00048 S003299/N00446 S003303/N00447 S003312/N00448 S003318/N00449		
R0710.3	DM86	T.P. INTERLOCK BYPASS M-CODE	
	S000405/N00048 S003032/N00415 S003036/N00416 S003286/N00444 S003327/N00451		
R0712.0	FOVR-1	FEED OVERRIDE 1 SELECT	
	S001309/N00186		
R0712.1	FOVR-2	FEED OVERRIDE 2 SELECT	
	S001317/N00187		
R0712.2	FOVR4	FEED OVERRIDE 4 SELECT	
	S001325/N00188		
R0712.3	FOVR8	FEED OVERRIDE 8 SELECT	
	S001333/N00189		
R0712.4		RESERVED	
	S001335/N00190		
R0712.5		RSERVED	
	S001337/N00191		
R0712.6		RESERVED	
	S001339/N00192		
R0712.7		RSERVED	
	S001341/N00193		
R0713.0	CNVERR	CONVERSION ERROR	
	S001365/N00194		
R0713.1	CODER2	CONVERSION ERROR	
	S001389/N00195		

ADDRESS	SYMBOL	FIRST COMMENT	STEP NO./NET NO.
R0713.2	CODER3	CONVERSION ERROR	
	S001413/N00196		
R0713.3	CODER4	CONVERSION ERROR	
	S001451/N00205		
R0713.4	RST1SC	RESET ON FOR 1 PLC SCAN	
	S000113/N00020		
	S000104/N00016		
R0713.5	RSTLCH	RESET HOLD RELAY	
	S000103/N00016		
	S000106/N00017		
R0714.0	SPO/R1	SPINDLE OVERRIDE SPA	
	S001417/N00197		
R0714.1	SPO/R2	SPINDLE OVERRIDE SPB	
	S001421/N00198		
R0714.2	SPO/R3	SPINDLE OVERRIDE SPC	
	S001425/N00199		
R0714.3		RESERVED	
	S001427/N00200		
R0714.4		RESERVED	
	S001429/N00201		
R0714.5		RESERVED	
	S001431/N00202		
R0714.6		RESERVED	
	S001433/N00203		
R0714.7		RESERVED	
	S001435/N00204		
R0719.0		RESERVED	
	S001972/N00273		
R0719.1		RESERVED	
	S002008/N00278		
R0719.2		RESERVED	
	S002004/N00278		
	S001991/N00275		
R0719.3		RESERVED	
	S001990/N00275		
	S001993/N00276		
R0719.4		RESERVED	
	S001961/N00273	S001977/N00274	S001999/N00278
	S001954/N00271		
R0719.5		RESERVED	
	S001953/N00271		
	S001956/N00272		
R0719.6		RESERVED	
	S002014/N00279	S002022/N00281	
	S002016/N00279		

ADDRESS	SYMBOL	FIRST COMMENT	STEP NO./NET NO.
R0719.7		RESERVED	
	S001988/N00274		
R0723.6		RESERVED	
	S001995/N00277		
R0723.7		RESERVED	
	S001996/N00277		
R0752.3		RESERVE	
	S001266/N00183		
R0758.0		RESERVE	
	S001237/N00175		
R0758.1		RESERVE	
	S001242/N00176		
R0758.2		RESERVE	
	S001244/N00177		
R0758.3		RESERVE	
	S001246/N00178		
R0758.4		RESERVE	
	S001248/N00179		
R0758.5		RESERVE	
	S001250/N00180		
R0758.6		RESERVE	
	S001252/N00181		
R0758.7		RESERVE	
	S001254/N00182		
R1412.2	DM101	X+ LIFT ENB M-CODE (PAR 2373)	
	S000438/N00048 S002199/N00301		
R1412.3	DM102	X- LIFT ENB M-CODE (PAR 2173)	
	S000432/N00048 S002197/N00301		
R1412.4	DM103	Z+ LIFT ENB M-CODE (PAR 2373)	
	S000441/N00048 S002204/N00302		
R1412.5	DM104	Z- LIFT ENB M-CODE (PAR 2173)	
	S000435/N00048 S002202/N00302		
R1415.0		1 SEC_PULSE	
	S004438/N00629 S004446/N00630 S004462/N00632 S004484/N00634 S004504/N00636 S004557/N00641		
	S004442/N00629		
R1415.1		COUNT	
	S004445/N00630 S004454/N00631		
	S004450/N00630		
R1415.2		COUNT	
	S004453/N00631 S004667/N00654 S004699/N00658 S004731/N00662 S004747/N00664 S004763/N00666 S004779/N00668		
	S004458/N00631		
R1415.3		COUNT	
	S004461/N00632 S004473/N00633		
	S004469/N00632		

ADDRESS	SYMBOL	FIRST COMMENT	STEP NO./NET NO.
R1415.4		COUNT	
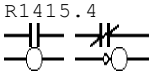	S004472/N00633	S004587/N00644	
	S004480/N00633		
R1415.5		COUNT	
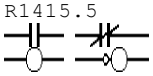	S004483/N00634	S004494/N00635	
	S004490/N00634		
R1415.6		COUNT	
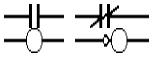	S004493/N00635	S004603/N00646	S004635/N00650
	S004500/N00635		
R1415.7		COUNT	
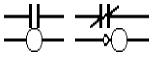	S004503/N00636	S004514/N00637	
	S004510/N00636		
R1416.0		COUNT	
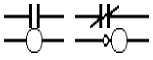	S004513/N00637	S004619/N00648	S004651/N00652
	S004520/N00637		
R1416.1		COUNT	
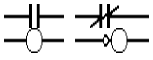	S004534/N00639	S004546/N00640	
	S004542/N00639		
R1416.2		COUNT	
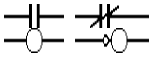	S004545/N00640	S004795/N00670	S004811/N00672
	S004553/N00640		
R1416.3		COUNT	
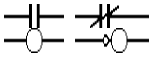	S004556/N00641	S004566/N00642	
	S004562/N00641		
R1416.4		COUNT	
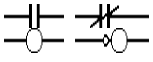	S004565/N00642	S004683/N00656	S004715/N00660
	S004571/N00642		
R1416.5		100MSEC_PULSE	
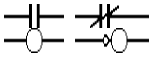	S004433/N00628	S004524/N00638	
	S004437/N00628		
R1416.6		COUNT	
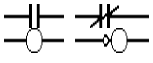	S004523/N00638	S004535/N00639	
	S004531/N00638		
R1416.7		COUNT	
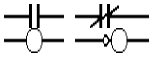	S004574/N00643	S004827/N00674	
	S004581/N00643		
R1420.0		COUNT	
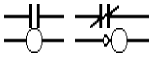	S004584/N00644	S004592/N00645	
	S004591/N00644		
R1420.1		COUNT	
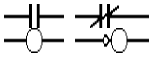	S004600/N00646	S004608/N00647	
	S004607/N00646		
R1420.2		COUNT	
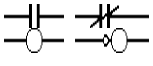	S004616/N00648	S004624/N00649	
	S004623/N00648		
R1420.3		COUNT	
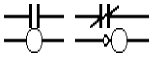	S004632/N00650	S004640/N00651	
	S004639/N00650		

ADDRESS	SYMBOL	FIRST COMMENT	STEP NO./NET NO.
R1420.4		COUNT	
	S004648/N00652	S004656/N00653	
	S004655/N00652		
R1420.5		COUNT	
	S004664/N00654	S004672/N00655	
	S004671/N00654		
R1420.6		COUNT	
	S004680/N00656	S004688/N00657	
	S004687/N00656		
R1420.7		COUNT	
	S004696/N00658	S004704/N00659	
	S004703/N00658		
R1421.0		COUNT	
	S004712/N00660	S004720/N00661	
	S004719/N00660		
R1421.1		COUNT	
	S004728/N00662	S004736/N00663	
	S004735/N00662		
R1421.2		COUNT	
	S004744/N00664	S004752/N00665	
	S004751/N00664		
R1421.3		COUNT	
	S004760/N00666	S004768/N00667	
	S004767/N00666		
R1421.4		COUNT	
	S004776/N00668	S004784/N00669	
	S004783/N00668		
R1421.5		COUNT	
	S004792/N00670	S004800/N00671	
	S004799/N00670		
R1421.6		COUNT	
	S004808/N00672	S004816/N00673	
	S004815/N00672		
R1421.7		COUNT	
	S004824/N00674	S004832/N00675	
	S004831/N00674		
R1422.0		COUNT	
	S004840/N00676	S004849/N00677	
	S004848/N00676		
R9000.0	IP=CMP	INPUT DATA = COMPARED DATA	
	S000251/N00034	S000340/N00047	S002024/N00281 S002369/N00325 S002376/N00327
	S002383/N00329	S002390/N00331	S002397/N00333 S003605/N00504
R9000.1	IP<CMP	INPUT DATA < DATA COMPARED	
	S001778/N00244	S001790/N00246	S003583/N00499 S003598/N00502
R9091.6	STMPL	SYSTEM PULSE 0.5SEC	
	S000885/N00123		

ADDRESS	SYMBOL	FIRST COMMENT	STEP NO./NET NO.
A0000.0	1000	LOW LUB OIL LEVEL,CYC INHIBIT	
	S003456/N00478		
A0000.1	1001	LOW LUB PRESSURE	
	S003450/N00477		
A0000.2	1002	CHUCK ACTUATION FAILURE	
	S000212/N00030 S003655/N00515 S003720/N00520 S003741/N00521 S003763/N00522 S003784/N00523 S003840/N00531		
	S003844/N00531		
A0000.3	1003	T.S. BODY UNCLAMP FAULT	
	S002626/N00372 S002681/N00376 S002705/N00378 S002728/N00380 S002773/N00386		
	S002775/N00386		
A0000.4	1004	T.S. BODY ACTUATION FAILURE	
	S002627/N00372 S002682/N00376 S002706/N00378 S002729/N00380 S002755/N00382 S002780/N00387		
	S002785/N00387		
A0000.5	1005	QUILL NOT IN POS,CY INTRUPT	
	S000208/N00030 S000812/N00112 S000824/N00113		
	S000819/N00112		
A0000.6	1006	SPINDLE POSITIONING ABORTED	
	S004382/N00614 S004391/N00617		
	S004396/N00617		
A0000.7	1007	PRG CNTL SW OPRTD, RST & HOME	
	S000935/N00130 S001114/N00157		
	S000937/N00130		
A0001.0	1010	TURRET CLAMP SIGNAL FAULTY	
	S001948/N00270		
	S001951/N00270		
A0001.1	1011	QUILL POS LOST, SET DOGS & RST	
	S000170/N00026 S000205/N00030 S001490/N00213 S003901/N00541 S003998/N00551		
	S004000/N00551		
A0001.2	1012	T.S. QUILL ACTUATION FAIL	
	S003902/N00541 S003963/N00547		
	S003967/N00547		
A0001.3	1013	SPN O/L,CHK TIP,FEED & CUT	
	S000194/N00029 S000219/N00030		
	S000197/N00029		
A0001.4	1014	X -AXIS CLUTCH TRIPPED	
	S000236/N00031 S002121/N00290		
	S002124/N00290		
A0001.5	1015	Z - AXIS CLUTCH TRIPPED	
	S000237/N00031 S002130/N00291		
	S002133/N00291		
A0001.7	1017	TURRET INDEX ABORTED	
	S000300/N00039 S000309/N00040 S001874/N00262 S001945/N00270		
	S001879/N00262		
A0002.0	1020	TUR NOT IN SAFE ZONE,GO XZ-HOM	
	S001924/N00267 S001963/N00273 S001979/N00274 S002001/N00278		
	S001928/N00267		

ADDRESS	SYMBOL	FIRST COMMENT	STEP NO./NET NO.
A0002.1	1021	TUR MOTOR OVER HEATAD	
	S000214/N00030 S001741/N00238 S001757/N00240 S001931/N00268		
	S001934/N00268		
A0002.2	1022	TOOL NUMBER HIGH	
	S001964/N00273 S001980/N00274 S002002/N00278		
	S001937/N00269		
A0002.3	1023	TUR UNCLMPD, MOV SAFE ZONE IND	
	S001497/N00213		
	S001751/N00239		
A0002.4	1024	PARTS CATCHER ACT FAILURE	
	S002421/N00339 S002426/N00340		
	S002441/N00342		
A0002.5	1025	DOOR ACTUATION FAILURE	
	S002449/N00345 S002469/N00346 S002475/N00347 S002484/N00348 S002511/N00352		
	S002516/N00352		
A0002.6	1026	SPINDLE ORIENTATION ABORTED	
	S004355/N00609 S004366/N00611		
	S004371/N00611		
A0002.7	1027	AIR PRESSURE LOW	
	S000218/N00030 S004407/N00621		
	S004412/N00621		
A0003.0	1030	T.P. ACTUATION FAIL	
	S003301/N00446 S003307/N00447 S003323/N00450		
	S003325/N00450		
A0003.1	1031	LUB MOTOR/PR SW CONT ON	
	S003471/N00480		
A0003.3	1033	CANCEL CSS BFR T-COMMAND	
	S000217/N00030 S002175/N00298		
	S002178/N00298		
A0003.4	1034	HYDRAULIC OIL LEVEL LOW	
	S001667/N00229 S001677/N00230 S001688/N00231		
	S001692/N00231		
A0003.5	1035	CONVEYOR TH. TRIP/LOAD	
	S002580/N00364		
	S002583/N00364		
A0004.2	1042	MOVE T.S. QUILL TO HOME POS.	
	S004003/N00552		
	S004005/N00552		
A0004.4	1044	CHECK TURRET ENCODER	
	S002015/N00279 S002025/N00281		
	S002029/N00281		
A0005.0	1050	PARTS MACHINED=PARTS SET	
	S000869/N00120 S000877/N00122		
	S000871/N00120		
A0005.1	1051	RELEASE EMG PB	
	S000080/N00011		
A0005.2	1052	HYD/COOLANT THERLAL O/L	
	S000082/N00012		

ADDRESS	SYMBOL	FIRST COMMENT	STEP NO./NET NO.
A0005.3	1053	M/C IDLE TRIP, PRESS M/C RESET	
	S001657/N00228	S001669/N00229 S001679/N00230	
	S001662/N00228		
A0005.4	1054	MOVE T.S.BODY IN OPPOSITE DIR	
	S002185/N00300		
	S003390/N00462		
A0005.5	1055	COUNTER BALANCE PRESSURE LOW	
	S000171/N00026	S002180/N00299 S002195/N00300 S002281/N00315	
	S002284/N00315		
A0006.0	1060	CABINET TEMP. TOO HIGH	
	S001668/N00229	S001678/N00230 S001701/N00232	
	S001704/N00232		
A0006.1	1061	PLC O/P OVERLOAD/SHORT CKT.,	
	S000138/N00024	S000477/N00050 S001670/N00229 S001680/N00230 S002359/N00323	
	S000141/N00024		
A0006.2	1062	PLC I/P SHORT CKT.,	
	S000151/N00025	S001671/N00229 S001681/N00230	
	S000155/N00025		
A0006.3	1063	CHECK TURRET STATION	
	S000341/N00047		
	S000347/N00047		
A0007.6	1076	SERVO AMP.WARNING(REF MAINT)	
	S001714/N00234		
	S001717/N00234		
A0007.7	1077	SPINDLE AMP WARNING(REF MAINT)	
	S001732/N00236		
	S001735/N00236		
A0008.0	1080	TOOL 1 WORNOUT	
	S004331/N00606		
	S004176/N00583		
A0008.1	1081	TOOL 2 WORNOUT	
	S004332/N00606		
	S004190/N00585		
A0008.2	1082	TOOL 3 WORNOUT	
	S004333/N00606		
	S004204/N00587		
A0008.3	1083	TOOL 4 WORNOUT	
	S004334/N00606		
	S004218/N00589		
A0008.4	1084	TOOL 5 WORNOUT	
	S004335/N00606		
	S004232/N00591		
A0008.5	1085	TOOL 6 WORNOUT	
	S004336/N00606		
	S004246/N00593		
A0008.6	1086	TOOL 7 WORNOUT	
	S004337/N00606		
	S004260/N00595		

ADDRESS	SYMBOL	FIRST COMMENT	STEP NO./NET NO.
A0008.7	1087	TOOL 8 WORNOUT	
	S004338/N00606		
	S004274/N00597		
A0009.0	1090	TOOL 9 WORNOUT	
	S004339/N00606		
	S004288/N00599		
A0009.1	1091	TOOL 10 WORNOUT	
	S004340/N00606		
	S004302/N00601		
A0009.2	1092	TOOL 11 WORNOUT	
	S004341/N00606		
	S004316/N00603		
A0009.3	1093	TOOL 12 WORNOUT	
	S004342/N00606		
	S004330/N00605		
A0009.4	1094	TOOL/TOOL GROUP WORN OUT	
	S004423/N00624		
	S004425/N00624		
A0009.5	1095	ABS ENCODER NOT SET(P1815.5)	
	S001216/N00172	S001672/N00229 S001682/N00230	
	S001221/N00172		
A0009.6	1096	OPEN & CLOSE THE DOOR ONCE	
	S000806/N00111	S000822/N00113	
	S000810/N00111		
A0010.0	2100	COOLANT CONTACTOR NOT ON	
	S000903/N00125	S002405/N00335	
	S003644/N00512		
A0010.1	2101	CHUCK POSITION FAULT	
	S000206/N00030	S000904/N00125 S002406/N00335 S003654/N00515 S003719/N00520	
	S003740/N00521	S003762/N00522 S003783/N00523 S003828/N00530 S003843/N00531	
	S003837/N00530		
A0010.2	2102	CHUCK NOT CLPED,SPN DISABLE	
	S000898/N00124		
	S003873/N00535		
A0010.3	2103	TOOL IS WEARING	
	S000905/N00125	S002407/N00335	
A0010.4	2104	CHUCK CLAMPED ON OD	
	S000899/N00124		
	S003879/N00536		
A0010.5	2105	CHUCK CLAMPED ON ID	
	S000900/N00124		
	S003885/N00537		
A0010.6	2106	CHUCK IN EXTREME END POS	
	S000213/N00030	S000906/N00125 S001489/N00213 S002408/N00335 S003877/N00536	
	S003883/N00537		
	S003893/N00538		
A0010.7	2107	AXES NOT REFERENCED, HOME X,Z	
	S000207/N00030	S000907/N00125 S001123/N00159 S002409/N00335	
	S001128/N00159		

ADDRESS	SYMBOL	FIRST COMMENT	STEP NO./NET NO.
A0011.0	2110	HOME X BEFORE Z	
	S001096/N00151		
A0011.1	2111	HOME Z BEFORE X	
	S001100/N00152		
A0011.2	2112	CLAMP CHUCK BEFORE SPN START	
	S001496/N00213 S001630/N00225		
	S001632/N00225		
A0011.3	2113	DOOR OPEN,CLOSE BEFORE CY STRT	
	S000156/N00026 S000202/N00030 S001594/N00222		
	S002223/N00305		
A0011.4	2114	CONVEYOR TH. TRIP/LS OPEN	
	S002534/N00357 S002597/N00366		
	S002549/N00360		
A0011.5	2115	TOOL PROBING INCOMPLETE	
	S000215/N00030		
	S003020/N00413 S003274/N00442		
A0011.6	2116	PRESS MACHINE RESET PB,	
	S001683/N00230		
A0012.0	2120	SPINDLE STOP, DOOR OPEN	
	S002520/N00353		
	S002524/N00353		
A0013.0		TOOL 1 GETTING WORNOUT	
	S004085/N00570		
A0013.1		TOOL 2 GETTING WORNOUT	
	S004092/N00571		
A0013.2		TOOL 3 GETTING WORNOUT	
	S004099/N00572		
A0013.3		TOOL 4 GETTING WORNOUT	
	S004106/N00573		
A0013.4		TOOL 5 GETTING WORNOUT	
	S004113/N00574		
A0013.5		TOOL 6 GETTING WORNOUT	
	S004120/N00575		
A0013.6		TOOL 7 GETTING WORNOUT	
	S004127/N00576		
A0013.7		TOOL 8 GETTING WORNOUT	
	S004134/N00577		
A0014.0		TOOL 9 GETTING WORNOUT	
	S004141/N00578		
A0014.1		TOOL 10 GETTING WORNOUT	
	S004148/N00579		
A0014.2		TOOL 11 GETTING WORNOUT	
	S004155/N00580		
A0014.3		TOOL 12 GETTING WORNOUT	
	S004162/N00581		

ADDRESS	SYMBOL	FIRST COMMENT	STEP NO./NET NO.
A0014.4	2144	TOOL/TOOL GROUP GETING WORNOUT	
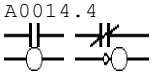	S004427/N00625		
	S004429/N00625		
A0015.0	1150	CHECK/REPLACE SPINDLE BELTS	
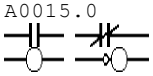	S004594/N00645		
	S004597/N00645		
A0015.1	1151	CHECK X-SLIDE BACKLASH	
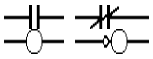	S004610/N00647		
	S004613/N00647		
A0015.2	1152	CHECK Z-SLIDE BACKLASH	
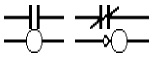	S004626/N00649		
	S004629/N00649		
A0015.3	1153	CHECK X-SLIDE WIPER CONDITION	
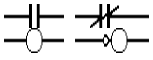	S004642/N00651		
	S004645/N00651		
A0015.4	1154	CHECK Z-SLIDE WIPER CONDITION	
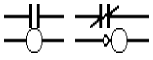	S004658/N00653		
	S004661/N00653		
A0015.5	1155	REPLACE LUB. CARTRIDGE	
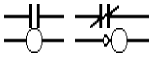	S004674/N00655		
	S004677/N00655		
A0015.6	1156	CHANGE HYDRAULIC OIL	
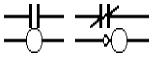	S004690/N00657		
	S004693/N00657		
A0015.7	1157	CLEAN DRIVE COOLING FANS	
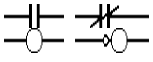	S004706/N00659		
	S004709/N00659		
A0016.0	1160	CLEAN SPINDLE BLOWER FAN	
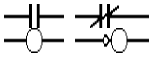	S004722/N00661		
	S004725/N00661		
A0016.1	1161	CLEAN PANEL COOLER FILTER	
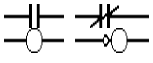	S004738/N00663		
	S004741/N00663		
A0016.2	1162	REPLACE PANEL COOLER FILTER	
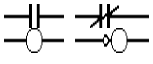	S004754/N00665		
	S004757/N00665		
A0016.3	1163	TIME FOR TURRET SERVICING	
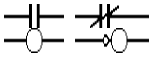	S004770/N00667		
	S004773/N00667		
A0016.4	1164	CHANGE TURRET BOX GEAR BOX OIL	
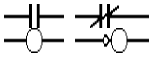	S004786/N00669		
	S004789/N00669		
A0016.5	1165	CLEAN/REPLACE FRL	
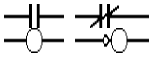	S004802/N00671		
	S004805/N00671		
A0016.6	1166	CLEAN/REPLACE SUCTION FILTER	
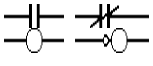	S004818/N00673		
	S004821/N00673		

ADDRESS	SYMBOL	FIRST COMMENT	STEP NO./NET NO.
A0016.7 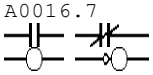	1167	TIME FOR CHUCK SERVICING	
	S004834/N00675		
	S004837/N00675		
A0017.0 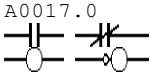	1170	TIME FOR CHIP CLEAN	
	S004851/N00677		
	S004854/N00677		

ADDRESS	SYMBOL	FIRST COMMENT	STEP NO./NET NO.
K0000.0	T8/T12	HIGH FOR 8 STATION TURRET	
	S001772/N00243 S001780/N00244 S001784/N00245 S001792/N00246 S001890/N00264		
	S001903/N00265 S001965/N00273 S001981/N00274		
K0000.1	ONECY1	CYCLE START PB ON MCP	
	S000799/N00110		
K0000.2	ZFIRST	Z TO REFERENCE FIRST	
	S001054/N00145 S001066/N00146 S001094/N00151 S001098/N00152		
K0000.3	ONECY2	SINGLE EXTERNAL CYCLE START PB	
	S000796/N00110		
K0000.4	TSPROX	T.S. PROX. BYPASS(LT-25)	
	S003335/N00454		
K0000.5	IDSEL	ID CLAMP SELECTION	
	S003662/N00516 S003664/N00516 S003676/N00516 S003678/N00516 S003701/N00519		
	S003724/N00520 S003745/N00521 S003767/N00522 S003788/N00523 S003855/N00533		
	S003858/N00533 S003863/N00534 S003866/N00534 S003874/N00536 S003880/N00537		
	S003887/N00538 S003889/N00538		
	S003703/N00519		
K0000.6	TULC16	HIGH FOR M/C WITOUT TURRET	
	S000284/N00037		
K0000.7	TSQO/R	HIGH FOR M/C'S W/O PROG QUILL	
	S004011/N00553		
K0001.0	DRILOF	DOOR INTERLOCK OFF	
	S000385/N00048 S000388/N00048 S000784/N00107 S000788/N00108 S000807/N00111		
	S001458/N00208 S001462/N00209 S002215/N00304 S002218/N00305		
	S002217/N00304		
K0001.1	ADRSEL	AUTO DOOR SELECT	
	S000203/N00030		
K0001.2	CHKO/R	CHUCK SIGNAL O/R ON	
	S003891/N00538		
K0001.3	TYBYP2	PROBE OTHER AXES MSG O/R M-COD	
	S003016/N00412 S003030/N00414 S003270/N00441 S003284/N00443		
K0001.4	TSI/L	T.S. QUILL I/L FOR CYCLE START	
	S000395/N00048 S000398/N00048 S000814/N00112 S004015/N00554		
	S004017/N00554		
K0001.5	BDTO/R	A0.7 ALARM O/R WITH BDT ON	
	S000918/N00128 S000922/N00128 S002135/N00292		
K0001.6		RESERVED	
	S000172/N00026		
K0001.7	SPSTRL	SPINDLE ENABLE WITH STOP PB	
	S001522/N00215 S001549/N00217		
K0002.3	SPPSOR	SPN HEALTHY FOR SPN POS OVR	
	S004353/N00609 S004380/N00614		
K0002.4	RPCSOR	CSS INTERLOCK O/R	
	S002177/N00298		
K0003.0	EDRSBY	EDIT-AUTO RESET BYPASS	
	S000094/N00014		

ADDRESS	SYMBOL	FIRST COMMENT	STEP NO./NET NO.
K0003.1	TQACLC	T.S. QUILL ACTUATION-1 LATCH	
	S003922/N00542	S003927/N00543	
	S003926/N00542		
K0003.2	FSM00	F.S. WITH M00/M01 DISABLE	
	S000832/N00114	S000834/N00114	
K0003.3	OVRON	FEED/SPINDLE O/R KEEP RELAY	
	S001292/N00184	S001302/N00185	
K0003.4	LUBSTP	CYCLE STOP WITH LUB FAULT	
	S000210/N00030		
K0003.5	BARTLF	TOOL LIFE MANAGEMENT(BAR-F)	
	S004417/N00624	S004419/N00624	
K0003.6	LUON_K	KEEP RELAY FOR LUB ON	
	S003505/N00485	S003506/N00485	
K0004.0	SARBYP	SPINDLE SPEED ARRIVAL BYPASS	
	S001611/N00224	S001617/N00224	
K0004.1	HOMREL	NORMAL HOMING MUST FOR CY SRT	
	S000742/N00102	S001125/N00159	
K0004.4		RESERVED	
	S000154/N00025		
K0004.5	OPT_PM	PERIODIC MAINTENANCE	
	S000535/N00069		
K0004.7		RESERVED	
	S002028/N00281		
K0005.0	OPTPRT	PARTS CATCHER OPTION	
	S000491/N00056		
K0005.1	OPTADR	AUTO DOOR OPTION	
	S000494/N00057	S000529/N00067	
K0005.2	OPTCHP	CHIP CONVEYOR OPTION	
	S000497/N00058		
K0005.3	OPTTS1	T.S. BODY -STD OPTION	
	S000500/N00059	S000505/N00060	S003348/N00456
K0005.4	OPTTS2	T.S. BODY-LT25 OPTION	
	S000501/N00059	S000504/N00060	S003347/N00456
K0005.5	OPTTP1	T.P.-MANUAL OPTION	
	S000178/N00026	S000508/N00061	S000513/N00062 S001492/N00213 S003340/N00455
K0005.6	OPTTP2	T.P. -AUTO OPTION	
	S000179/N00026	S000509/N00061	S000512/N00062 S001493/N00213 S003341/N00455
K0005.7	OPTFS	FS ACTIVE/INACTIVE - OPTION	
	S000516/N00063	S002643/N00373	S002655/N00374 S002665/N00375 S003673/N00516
	S003692/N00517	S003916/N00542	S003933/N00544
K0006.0	OPTTLF	TOOL LIFE OPTION	
	S000519/N00064		
K0006.1	OPTSPO	SPINDLE ORIENTATION OPTION	
	S000449/N00048	S000522/N00065	S000525/N00066 S001558/N00217 S004363/N00610

ADDRESS	SYMBOL	FIRST COMMENT	STEP NO./NET NO.
K0006.2 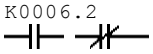	APROPT	AIR PRESSURE OPTION	S000528/N00067
K0006.3 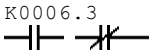	OPTHFS	HYDRAULIC FLOAT SWITCH OPTION	S001691/N00231
K0006.4 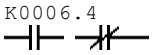	OPTLF2	TOOL LIFE OPTION(FANUC)	S000532/N00068
K0006.5 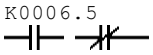	OPTIDT	M/C IDLE TRIP OPTION	S001647/N00227
K0006.6 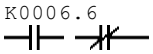	A/COPT	A/C ALARM ENABLE/DISABLE	S001694/N00232 S001696/N00232
K0006.7 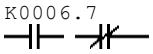		RESERVED	S000346/N00047
K0007.7 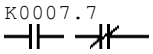	OPTTL	TOWER LAMP MESSAGE/ALM	S000865/N00119 S000893/N00123
K0008.0 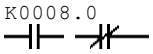	DOOR+CHUCK	DOOR+CHUCK	S002245/N00307 S002249/N00308 S002253/N00309 S002257/N00310 S002261/N00311
K0008.1 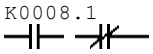	DOOR+QUILL+CHUCK	DOOR+QUILL+CHUCK	S002246/N00307 S002250/N00308 S002254/N00309 S002258/N00310 S002262/N00311
K0008.4 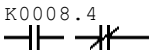	NCCLTH	HIGH FOR NC TYPE CLUTCH TRIP	S000005/N00002 S000007/N00002 S000012/N00002 S000014/N00002 S000021/N00003 S000023/N00003 S000028/N00003 S000030/N00003 S000061/N00009 S000064/N00009 S000072/N00010 S000074/N00010 S000157/N00026 S000160/N00026 S000163/N00026 S000166/N00026 S000228/N00031 S000231/N00031 S000671/N00095 S000674/N00095 S000694/N00098 S000697/N00098 S000710/N00099 S000713/N00099 S000728/N00100 S000731/N00100 S000945/N00132 S000947/N00132 S000970/N00134 S000972/N00134 S002030/N00282 S002032/N00282 S002041/N00283 S002043/N00283 S002053/N00284 S002055/N00284 S002064/N00285 S002066/N00285 S002074/N00286 S002076/N00286 S002081/N00287 S002083/N00287 S002088/N00287 S002090/N00287 S002095/N00288 S002097/N00288 S002102/N00289 S002104/N00289 S002109/N00289 S002111/N00289 S002116/N00290 S002118/N00290 S002125/N00291 S002127/N00291 S002289/N00316 S002291/N00316 S002314/N00318 S002316/N00318
K0008.5 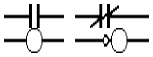	XCLLCH	X CLT TRIP MEMORISE RELAY	S002079/N00286 S002086/N00287 S002094/N00287
K0008.6 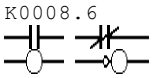	ZCLLCH	Z CLT TRIP MEMORISE RELAY	S002100/N00288 S002107/N00289 S002115/N00289
K0008.7 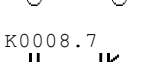	ININRF	INITIATE NORMAL HOMING	S000743/N00102 S001115/N00157 S001126/N00159 S001117/N00157
K0009.7 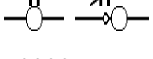	BUTHOM	INITIATE BUTT HOMING	S001101/N00153 S001104/N00154 S001113/N00156
K0012.0 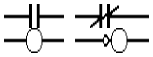		RESERVE	S002268/N00313
K0012.1 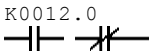		RESERVE	S002269/N00313
K0012.2 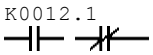		RESERVE	S002270/N00313

ADDRESS	SYMBOL	FIRST COMMENT	STEP NO./NET NO.
K0012.3	S002271/N00313	RESERVE	
K0012.4	S002272/N00313	RESERVE	
K0012.5	S002273/N00313	RESERVE	
K0012.6	S002274/N00313	RESERVE	
K0012.7	S002275/N00313	RESERVE	

ADDRESS	SYMBOL	FIRST COMMENT	STEP NO./NET NO.
X0002	TRFDBK S000243/N00032	TURRET FEEDBACK BYTE	

ADDRESS	SYMBOL	FIRST COMMENT	STEP NO./NET NO.
Y0000			
	S000481/N00050 S002363/N00323		

ADDRESS	SYMBOL	FIRST COMMENT	STEP NO./NET NO.
F0010	MBYTE	M-DECODE BYTE	
	S000541/N00070 S000547/N00071 S000553/N00072 S000559/N00073 S000565/N00074		
	S000571/N00075 S000577/N00076 S000583/N00077 S000589/N00078 S000595/N00079		
	S000601/N00080 S000607/N00081 S000613/N00082 S000619/N00083		
F0026	TCBYTE	TOOL FUNCTION CODE BYTE	
	S001777/N00243 S001789/N00245 S001895/N00264 S001908/N00265 S001970/N00273		
	S001986/N00274		

ADDRESS	SYMBOL	FIRST COMMENT	STEP NO./NET NO.
G0010	FRBYT1 S001372/N00195	MANUAL FEED RATE O/R BYTE - 1	
G0011	FRBYT2 S001396/N00196	MANUAL FEED RATE O/R BYTE - 2	
G0012	F/RBYT S001348/N00194	FEED RATE OVERRIDE BYTE	
G0014	ROVR S001261/N00183		
G0030	SPBYTE S001442/N00205	SPINDLE SPEED O/R BYTE	

ADDRESS	SYMBOL	FIRST COMMENT	STEP NO./NET NO.
R0120		RESERVE	
	S003523/N00488	S003532/N00490	
R0126		RESERVE	
	S003528/N00489		
R0134		CURRENT DATE	
	S003536/N00491		
R0136		CURRENT HOUR	
	S003540/N00492		
R0138		CURRENT MINUTES	
	S003544/N00493		
R0150		CURRENT DATE	
	S003537/N00491	S003550/N00494	
R0154		CURRENT HOUR	
	S003541/N00492	S003558/N00495	
R0158		CURRENT MINUTES	
	S003545/N00493	S003575/N00497	
R0162		RESERVE	
	S003552/N00494	S003566/N00496	
R0166			
	S003560/N00495	S003567/N00496	
R0170			
	S003568/N00496	S003574/N00497	
R0174			
	S003576/N00497	S003581/N00498	S003589/N00500 S003610/N00505
R0182			
	S003591/N00500	S003597/N00501	
R0550	PARRD	PAR READ BASE DATA	
	S001180/N00166	S001209/N00170	
R0554		RESERVED	
	S001188/N00167		
R0556		RESERVED	
	S001196/N00168		
R0558		RESERVED	
	S001204/N00169		
R0608	TRFDBKR	TURRET FEEDBACK REGISTER BYTE	
	S000244/N00032	S000249/N00033	S000339/N00046
R0618	TFBBYT	TURRET BIN F/B BYTE	
	S001894/N00264	S001907/N00265	S001969/N00273 S001985/N00274
R0621	TURCMD	TURRET COMMAND BYTE	
	S000248/N00033	S000329/N00044	
R0623	SPTFUN	RESERVED BYTE FOR SHORTER PATH	
	S001896/N00264	S001909/N00265	

ADDRESS	SYMBOL	FIRST COMMENT	STEP NO./NET NO.
R0669		RESERVED	
	S000330/N00044 S000338/N00046		
R0680	PARWRT	PARAM WRITE BASE DATA ADD	
	S001135/N00160 S001172/N00165		
R0684			
	S001143/N00161		
R0686			
	S001151/N00162		
R0688			
	S001159/N00163		
R0690			
	S001167/N00164		
R0694	PREZER	PRESET ZERO BYTE	
	S001133/N00160 S001141/N00161 S001149/N00162 S001157/N00163 S001165/N00164		
	S001178/N00166 S001186/N00167 S001194/N00168 S001202/N00169		
R0700	DBYT1	M DECODE BYTE 1	
	S000543/N00070		
R0701	DBYT2	M DECODE BYTE 2	
	S000549/N00071		
R0702	DBYTE3	M DECODE BYTE 3	
	S000555/N00072		
R0703	DBYTE4	M DECODE BYTE 4	
	S000561/N00073		
R0704	DBYTE5	M DECODE BYTE 5	
	S000567/N00074		
R0705	DBYTE6	M DECODE BYTE6	
	S000573/N00075		
R0706	DBYTE7	M DECODE BYTE 7	
	S000579/N00076		
R0707	DBYTE8	M DECODE BYTE 8	
	S000585/N00077		
R0708	DBYTE9	M DECODE BYTE 9	
	S000591/N00078		
R0709	DBYTE10	M DECODE BYTE 10	
	S000597/N00079		
R0710	DBYTE11	M DECODE BYTE 11	
	S000603/N00080		
R0711	DBYTE12	M DECODE BYTE 12	
	S000609/N00081		
R0712	FEDBYT	FEED O/R BYTE	
	S001347/N00194 S001371/N00195 S001395/N00196		
R0714	SPNBYT	SPINDLE SPEED O/R BYTE	
	S001441/N00205		

ADDRESS	SYMBOL	FIRST COMMENT	STEP NO./NET NO.
R0720		RESERVED	
	S001971/N00273 S001987/N00274 S002020/N00280		
R0722		RESERVED	
	S002006/N00278		
R0724		RESERVED	
	S002007/N00278 S002021/N00280		
R0758	ROVRRL	RAPID OVERRIDE	
	S001260/N00183		
R1412	DBYTE13	M DECODE BYTE 13	
	S000615/N00082		
R1413	DBYTE14	M DECODE BYTE 14	
	S000621/N00083		

ADDRESS	SYMBOL	FIRST COMMENT	STEP NO./NET NO.
A0000	S002368/N00324		
A0004	S002375/N00326		
A0008	S002382/N00328		
A0011	S002396/N00332		
A0015	S002389/N00330		

ADDRESS	SYMBOL	FIRST COMMENT	STEP NO./NET NO.
D0000	12	BYTE FOR 12 STATION TURRET	
	S001893/N00264 S001968/N00273		
D0001	8	BYTE FOR 8 STATION TURRET	
	S001906/N00265 S001984/N00274		
D1000			
	S003582/N00498 S003590/N00500 S003604/N00503 S003611/N00505		
D1100		PRESET VALUE	
	S004448/N00630		
D1102		CURRENT VALUE	
	S004449/N00630		
D1106		PRESET VALUE	
	S004456/N00631		
D1108		CURRENT VALUE	
	S004457/N00631		
D1112		PRESET VALUE	
	S004467/N00632		
D1114		CURRENT VALUE	
	S004468/N00632		
D1118		PRESET VALUE	
	S004478/N00633		
D1120		CURRENT VALUE	
	S004479/N00633		
D1124		PRESET VALUE	
	S004488/N00634		
D1126		CURRENT VALUE	
	S004489/N00634		
D1130		PRESET VALUE	
	S004498/N00635		
D1132		CURRENT VALUE	
	S004499/N00635		
D1136		PRESET VALUE	
	S004508/N00636		
D1138		CURRENT VALUE	
	S004509/N00636		
D1142		PRESET VALUE	
	S004518/N00637		
D1144		CURRENT VALUE	
	S004519/N00637		
D1148		PRESET VALUE	
	S004540/N00639		
D1150		CURRENT VALUE	
	S004541/N00639		

ADDRESS	SYMBOL	FIRST COMMENT	STEP NO./NET NO.
D1154		PRESET VALUE	
	S004551/N00640		
D1156		CURRENT VALUE	
	S004552/N00640		
D1160		PRESET VALUE	
	S004560/N00641		
D1162		CURRENT VALUE	
	S004561/N00641		
D1166		PRESET VALUE	
	S004569/N00642		
D1168		CURRENT VALUE	
	S004570/N00642		
D1172		PRESET VALUE	
	S004529/N00638		
D1174		CURRENT VALUE	
	S004530/N00638		
D1178		PRESET-COUNT	
	S004579/N00643		
D1180		CURRENT VALUE	
	S004580/N00643		
D1194		SETVALUE A17.0	
	S004846/N00676		
D1196		CURRENTVALUE A17.0	
	S004847/N00676		
D1200		SETVALUE A15.0	
	S004589/N00644		
D1202		CURENTVALUEA15.0	
	S004590/N00644		
D1206		SETVALUE A15.1	
	S004605/N00646		
D1208		CURENTVALUEA15.1	
	S004606/N00646		
D1212		SETVALUE A15.2	
	S004621/N00648		
D1214		CURENTVALUEA15.2	
	S004622/N00648		
D1218		SETVALUE A15.3	
	S004637/N00650		
D1220		CURENTVALUEA15.3	
	S004638/N00650		
D1224		SETVALUE A15.4	
	S004653/N00652		
D1226		CURENTVALUEA15.4	
	S004654/N00652		

ADDRESS	SYMBOL	FIRST COMMENT	STEP NO./NET NO.
D1230		SETVALUE A16.5	
	S004797/N00670		
D1232		CURENTVALUEA16.5	
	S004798/N00670		
D1236		SETVALUE A16.6	
	S004813/N00672		
D1238		CURENTVALUEA16.6	
	S004814/N00672		
D1242		SETVALUE A15.5	
	S004669/N00654		
D1244		CURENTVALUEA15.5	
	S004670/N00654		
D1248		SETVALUE A15.6	
	S004685/N00656		
D1250		CURENTVALUEA15.6	
	S004686/N00656		
D1254		SETVALUE A15.7	
	S004701/N00658		
D1256		CURENTVALUEA15.7	
	S004702/N00658		
D1260		SETVALUE A16.0	
	S004717/N00660		
D1262		CURENTVALUEA16.0	
	S004718/N00660		
D1266		SETVALUE A16.1	
	S004733/N00662		
D1268		CURENTVALUEA16.1	
	S004734/N00662		
D1272		SETVALUE A16.2	
	S004749/N00664		
D1274		CURENTVALUEA16.2	
	S004750/N00664		
D1278		SETVALUE A16.3	
	S004765/N00666		
D1280		CURENTVALUEA16.3	
	S004766/N00666		
D1284		SETVALUE A16.4	
	S004781/N00668		
D1286		CURENTVALUEA16.4	
	S004782/N00668		
D1290		SETVALUE A16.7	
	S004829/N00674		
D1292		CURENTVALUEA16.7	
	S004830/N00674		

ADDRESS	SYMBOL	FIRST COMMENT	STEP NO./NET NO.
P0001	PARTS_CATCHER		
	S000493/N00056	S002417/N00338	
P0002	AUTO_DOOR		
	S000496/N00057	S002444/N00344	
P0003	CHIP_CONVEYOR		
	S000499/N00058	S002527/N00355	
P0004	TSBODY-STD		
	S000503/N00059	S002625/N00371	
P0005	TP-MANUAL		
	S000511/N00061	S002788/N00389	
P0006	TP-AUTO		
	S000515/N00062	S003041/N00418	
P0007	TSBODY-LT25		
	S000507/N00060	S003333/N00453	
P0008	FS-ACTIVE		
	S000518/N00063	S003393/N00464	
P0009	LUBRICATION		
	S000486/N00053	S003406/N00468	
P0010	COOLANT		
	S000484/N00052	S003621/N00508	
P0011	CHUCK		
	S000488/N00054	S003647/N00514	
P0012	T.S._QUILL		
	S000490/N00055	S003896/N00540	
P0013	T-LIFE		
	S000521/N00064	S004020/N00556	
P0014	SPN_ORIEN		
	S000524/N00065	S004346/N00608	
P0015	SPN_POSITIONING		
	S000527/N00066	S004374/N00613	
P0016	AIR_PRESSURE		
	S000531/N00067	S004399/N00619	
P0017	TOOLLIFE-FANUC		
	S000534/N00068	S004415/N00623	
P0018	PERIODIC_MAINT		
	S000537/N00069	S004432/N00627	

ADDRESS	SYMBOL	FIRST COMMENT	STEP NO./NET NO.
CTR No.1	S000773/N00105		
CTR No.3	S003685/N00516		
CTR No.4	S003924/N00542		
CTR No.5	S002458/N00345		
CTR No.6	S002646/N00373		

ADDRESS	SYMBOL	FIRST COMMENT	STEP NO./NET NO.
CTRB No.9			
	S002568/N00363		

ADDRESS	SYMBOL	FIRST COMMENT	STEP NO./NET NO.
TMR No.1	S003426/N00473		
TMR No.5	S003486/N00483		
TMR No.6	S003491/N00484		
TMR No.8	S001660/N00228		
TMR No.9	S000185/N00027		
TMR No.10	S000189/N00028		
TMR No.11	S000317/N00042		
TMR No.14	S002558/N00362		
TMR No.15	S003443/N00476		
TMR No.16	S003434/N00475		
TMR No.17	S001877/N00262		
TMR No.18	S003823/N00529		
TMR No.19	S003965/N00547		
TMR No.20	S002439/N00342		
TMR No.21	S002514/N00352		
TMR No.22	S002540/N00358		
TMR No.23	S002544/N00359		
TMR No.24	S002605/N00367		
TMR No.25	S002764/N00384		
TMR No.26	S002769/N00385		
TMR No.27	S002783/N00387		

ADDRESS	SYMBOL	FIRST COMMENT	STEP NO./NET NO.
TMR No.30			
	S001601/N00223		
TMR No.31			
	S003319/N00449		
TMR No.40			
	S003810/N00527		

ADDRESS	SYMBOL	FIRST COMMENT	STEP NO./NET NO.
TMRB No.41	S001224/N00173		
TMRB No.42	S001229/N00174		
TMRB No.43	S000758/N00104		
TMRB No.44	S003361/N00458		
TMRB No.45	S003373/N00460		
TMRB No.46	S003463/N00479		
TMRB No.47	S004402/N00620		
TMRB No.48	S002059/N00284		
TMRB No.49	S002070/N00285		
TMRB No.50	S000054/N00007		
TMRB No.51	S004393/N00617		
TMRB No.52	S004368/N00611		
TMRB No.53	S001580/N00220		
TMRB No.61	S004027/N00557		
TMRB No.62	S001045/N00144		
TMRB No.63	S001079/N00148		
TMRB No.64	S001089/N00150		
TMRB No.65	S003805/N00526		
TMRB No.69	S002693/N00377		
TMRB No.70	S002529/N00356		
TMRB No.71	S002210/N00303		

ADDRESS	SYMBOL	FIRST COMMENT	STEP NO./NET NO.
TMRB No.72			
	S004434/N00628		
TMRB No.73			
	S004439/N00629		
TMRB No.74			
	S003510/N00486		

Ace Designers Limited.,

An ISO 9001 Company
Registered Office:
PLOT NO. 7 & 8, 2nd Phase, Peenya Industrial Area, Bangalore - 560 058. INDIA
TEL NO. 22186700, FAX: (91-080) 22186850
e-mail:acetsg@blr.vsnl.net.in website:http://www.acedesigners.com

Company / Customer :

Machine model : SUPER JOBBER Elite / 500 / XL / LM CNC LATHE

Sales order :

Machine number :

Line Voltage	380/415V, 3PEN, 50Hz
Control Voltage	24VDC, 230VAC
Back Up Fuse	63 A
Rated Current	32/29 A
KVA Rating	21 KVA
Size of wire	10 SQMM

Revision- 2014

Number of pages-37

DRAWN	GR	REVISION-1		CUSTOMER :	TITLE : Title page / cover sheet	DRAWING NO.
DESIGNED	GR	REVISION-2				
APPROVED	PVR	REVISION-3		MACHINE MODEL : SUPER JOBBER ELITE	PLOT FRAME ACE STD_008_A3	PAGE NO. 1

Table of contents

TABLE OF CONTENT ACE STD_005

Page No.	Drawing Number	Page description
1		Title page / cover sheet
2		Table of contents : /1 - /28
3		Table of contents : /29 - /37
4	11-404/26-4-6	COMPONENT SYMBOLS OVERVIEW AND DESIGNATION-1
5	11-404/27-4-6	COMPONENT SYMBOLS OVERVIEW AND DESIGNATION-2
6	11-404/28-4-6	COMPONENT SYMBOLS OVERVIEW AND DESIGNATION-3
7	1032721/81-4-6	TOTAL CONNECTION DIAGRAM
8	1032721/82-4-6	POWER CIRCUIT DIAGRAM
9	14-402/03-4-6	COOLER POWER AND POWER ON CONTROL CIRCUIT
10	1032721/83-4-6	FEED AND SPINDLE AMPLIFIER CONNECTION DETAILS
11	1032721/84-4-6	CNC ON/OFF I/O MODULE AND SERVO MOTORBRAKE CONNECTION
12	14-402/05-4-6	EMERGENCY AND CONTACTOR CONTROL CIRCUIT
13	14-402/14-4-6	X33 SSR PCB ,TOWER LAMP AND RP10 2 RELAY PCB CONNECTION
14	14-402/07-4-6	IPC8 CABLE CONNECTION DETAILS
15	11-404/09-4-6	MACHINE CONTROL PANEL CONNECTION-1
16	14-402/08-4-6	MACHINE CONTROL PANEL CONNECTION-2
17	11-404/11-4-6	MACHINE CONTROL PANEL CONNECTION-3
18	11-404/12-4-6	CHUCK AND TAILSTOCK QUILL INTERFACE CIRCUIT DIAGRAM
19	14-402/09-4-6	TURRET INTERFACE CIRCUIT DIAGRAM
20	14-403/14-4-6	CHIP CONVEYOR HARD WIRED INTERFACE CIRCUIT DIAGRAM
21	11-404/15-4-6	AUTO DOOR INTERFACE CIRCUIT DIAGRAM
22	11-404/16-4-6	PARTS CATCHER INTERFACE CIRCUIT DIAGRAM
23	11-404/18-4-6	TOUCH PROBE INTERFACE CIRCUIT DIAGRAM
24	14-402/33-4-6	24V DISTRIBUTION AND EARTHING CABLE DETAILS
25	11-404/20-4-6	PMC SIGNAL CONNECTION DETAILS
26	11-404/21-4-6	CABLE DETAILS-1
27	14-402/10-4-6	CABLE DETAILS-2
28	11-404/23-4-6	CABLE DETAILS-3

Please Note: Only the above indicated drawings are applicable for the specific machine model.The attached drawings may contain circuits not applicable for your machine

DRAWN	SM	REVISION-1		CUSTOMER :	DESIGNERS	TITLE : Table of contents : /1 - /28	DRAWING NO.
DESIGNED	MGN	REVISION-2					
APPROVED	PVR	REVISION-3		MACHINE MODEL : SUPER JOBBER ELITE		PLOT FRAME ACE STD_008_A3	PAGE NO. 2

Table of contents

TABLE OF CONTENT ACE STD_005

Page No.	Drawing Number	Page description
29	11-404/29-4-6	IPC3-IPC9 PIN CONNECTION DETAILS
30	14-402/40-4-6	TABLE-3 Cable details AND TABLE-5 details
31	14-402/11-4-6	MACHINE CONTROL PANEL LAYOUT
32	14-402/15-4-6	ELECTRICAL CABINET LAYOUT
33		Enclosure legend : =+-IO_MODULE - =+-F21
34	11-404/38-4-6	DRIVE,I/O MODULE AND INTERFACE PCB LAYOUT
35	11-404/39-4-6	CNC LAYOUT
36		Summarized parts list : ERESOLS006 - EACPRIC038
37		Summarized parts list : ECSFOOS001 - EACPVCS001

Please Note: Only the above indicated drawings are applicable for the specific machine model.The attached drawings may contain circuits not applicable for your machine

DRAWN	SM	REVISION-1		CUSTOMER :	DESIGNERS	TITLE : Table of contents : /29 - /37	DRAWING NO.
DESIGNED	MGN	REVISION-2					
APPROVED	PVR	REVISION-3		MACHINE MODEL : SUPER JOBBER ELITE		PLOT FRAME ACE STD_008_A3	PAGE NO. 3

SYMBOL OVERVIEW	DESCRIPTION
	POTENTIAL/DEVICE CONNECTION POINT
	TERMINAL CONNECTION POINT
	FEMALE AND MALE PIN CONNECTOR
	EARTHING POINT
	PLC CONNECTION POINT 1. DIGITAL INPUT 2. DIGITAL OUTPUT
	CONNECTION DEFINITION POINT
	CABLE DEFINITION LINE
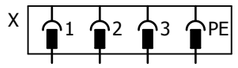	PLUG-IN SOCKET
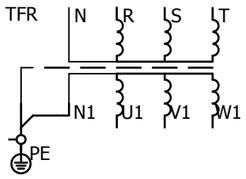	ISOLATION TRANSFORMER
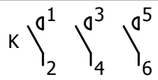	POWER NO CONTACTS OF CONTACTOR
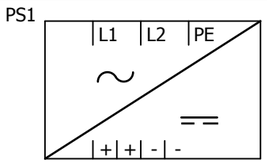	SWITCHED MODE POWER SUPPLY (SMPS)
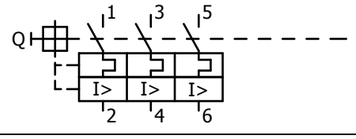	MOTOR PROTECTION CIRCUIT BREAKER (MPCB)
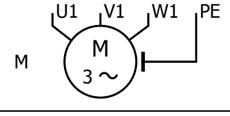	THREE PHASE MOTOR WITH PE
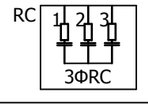	3 PHASE SNUBBER
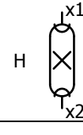	LAMP

SYMBOL OVERVIEW	DESCRIPTION
	RESISTOR
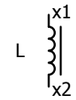	INDUCTOR
	LIGHT EMITTING DIODE (LED)
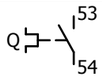	NO-AUXILIARY CONTACT OF MPCB
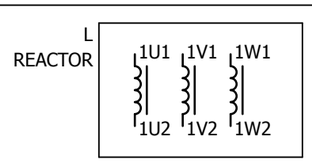	AC REACTOR
	CONTACTOR COIL
	NO-AUXILIARY CONTACT OF CONTACTOR
	NC-AUXILIARY CONTACT OF CONTACTOR
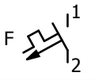	CIRCUIT BREAKER,1-POLE
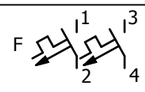	CIRCUIT BREAKER,2-POLE
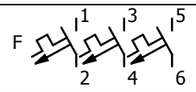	CIRCUIT BREAKER,3-POLE
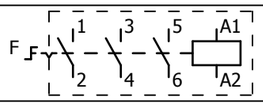	MAINS DISCONNECTOR WITH UNDERVOLTAGE COIL
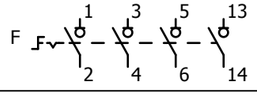	SWITCH,4-POLE
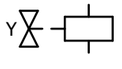	SINGLE SOLENOID VALVE
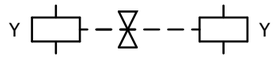	DOUBLE SOLENOID VALVE

DRAWN	SM	REVISION-1		CUSTOMER :	TITLE : COMPONENT SYMBOLS OVERVIEW AND DESIGNATION-1	DRAWING NO.
DESIGNED	MGN	REVISION-2				11-404/26-4-6
APPROVED	PVR	REVISION-3		MACHINE MODEL : SUPER JOBBER ELITE	PLOT FRAME ACE STD_008_A3	PAGE NO. 4

ACE DESIGNERS

SYMBOL OVERVIEW	DESCRIPTION
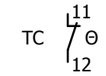	NC-CONTACT TYPE TEMPERATURE SWITCH
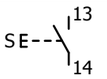	NO-CONTACT TYPE PUSHBUTTON
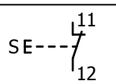	NC-CONTACT TYPE PUSHBUTTON
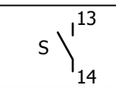	NO-CONTACT TYPE SWITCH
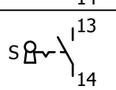	NO-CONTACT TYPE KEY SWITCH
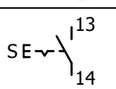	NO-CONTACT TYPE SELECTOR SWITCH
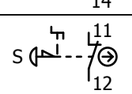	NC-CONTACT TYPE EMERGENCY STOP PUSHBUTTON
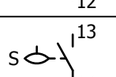	NO-CONTACT TYPE FLOAT SWITCH
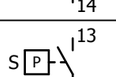	NO-CONTACT TYPE PRESSURE SWITCH
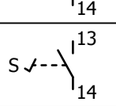	PEDAL TYPE NO-SWITCH (FOOTSWITCH)
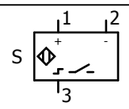	NO-CONTACT TYPE PROXIMITY SWITCH
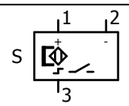	NO-CONTACT TYPE REED SWITCH
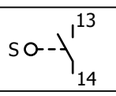	ROLLER TYPE NO-LIMIT SWITCH
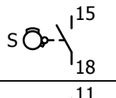	NO-CONTACT TYPE LIMIT SWITCH
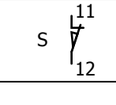	NC-CONTACT TYPE LIMIT SWITCH
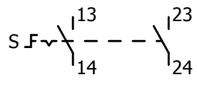	NO-CONTACT TYPE 2-POSITION SELECTOR SWITCH

SYMBOL OVERVIEW	DESCRIPTION
	2 POLE,4-POSITION ROTARY SWITCH
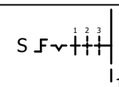	3 POLE,8-POSITION ROTARY SWITCH
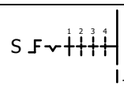	4 POLE,16-POSITION ROTARY SWITCH
	RELAY COIL
	NO-AUXILIARY CONTACT OF RELAY
	NC-AUXILIARY CONTACT OF RELAY
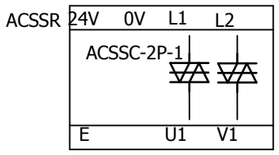	AC SOLID STATE RELAY
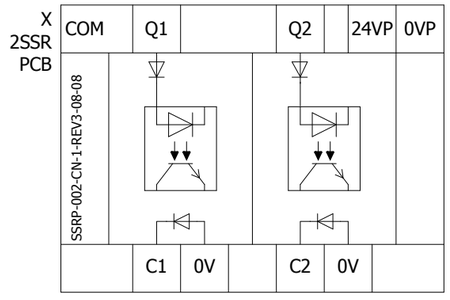	2-SOLID STATE RELAY PCB
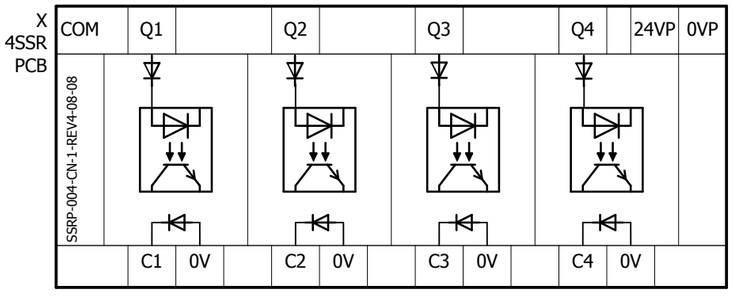	4-SOLID STATE RELAY PCB

DRAWN	SM	REVISION-1		CUSTOMER :	TITLE : COMPONENT SYMBOLS OVERVIEW AND DESIGNATION-2	DRAWING NO. 11-404/27-4-6
DESIGNED	MGN	REVISION-2				
APPROVED	PVR	REVISION-3		MACHINE MODEL : SUPER JOBBER ELITE	PLOT FRAME ACE STD_008_A3	PAGE NO. 5

ACE DESIGNERS

SYMBOL OVERVIEW	DESCRIPTION
F	FUSE
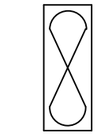	FAN
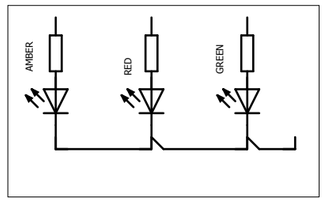	TOWER LAMP
	DIODE
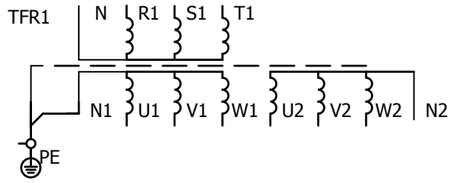	AUTO TRANSFORMER

DESIGNATION	COMPONENT
S1,S2,.....Sn	SWITCHES AND PUSH BUTTONS
F1,F2,.....Fn	FUSES AND MCB'S
K1,K2,.....Kn	CONTACTORS
Q1,Q2,.....Qn	OVERLOAD RELAYS (MPCB)
X1,X2,.....Xn	TERMINAL BLOCKS,PLUG AND SOCKETS,SSR PCB's
Xn.1,Xn.2,.....Xn.n	TERMINAL
Y1,Y2,.....Yn	HYDRAULIC AND PNEUMATIC SOLENOIDS
H1,H2,.....Hn	INDICATORS AND LAMPS
D1,D2,.....Dn	DIODES
C1,C2,.....Cn	RELAYS
R1,R2,.....Rn	RESISTORS
M1,M2,.....Mn	MOTORS
WK1,WK2,....WKn	FANUC INTERFACE CABLES
WY1,WY2,....WYn	SOLENOID INTERFACE CABLES
WS1,WS2,....WSn	SWITCHES/SENSORS INTERFACE CABLES
WIPC1,2,3,4,5,6,8,9 WCB104,105,106,107	INTERFACE PCB CABLES

DRAWN	SM	REVISION-1		CUSTOMER :	ACE DESIGNERS	TITLE : COMPONENT SYMBOLS OVERVIEW AND DESIGNATION-3	DRAWING NO.
DESIGNED	MGN	REVISION-2					11-404/28-4-6
APPROVED	PVR	REVISION-3		MACHINE MODEL : SUPER JOBBER ELITE		PLOT FRAME ACE STD_008_A3	PAGE NO. 6

COMPUTER NUMERICAL CONTROLLER (CNC) SYSTEM - FANUC 0I- TF

CNC
11/A7

MAIN BOARD

ETHERNET(CD38A)
SV-CHK(CA69)
FSSB(COP10A)
I/O LINK(JD44A)
24V-IN(CP1)
A-OUT&HD(JA40)
RS-232-2(JD36B)
RS232-1(JD36A)
MDI(JA2)
(CA122)

ETHERNET CONNECTOR
SERVO CHECK BOARD
COP10B
24VDC
SOFT KEY CABLE

IO_MODULE
11/D1
JD1A
JD1B
CP2
CP1
HIGH SPEED INPUT
TOUCH PROBE PANEL
RS232-C I/O DEVICE
CK1
MDI UNIT

JA3
CB104
CB105
CB106
CB107
MPG

SVSP
10/C1

SVSP

CX48
CX3

IF_PCB
11/E1

IPC9
IPC8
IPC7
IPC6
IPC5
IPC4
IPC3
IPC2
IPC1

ANALOG OUTPUT FOR TOOL DRIVES
RS-232C I/O DEVICE /TPM TRACK

TO TERMINAL BLOCK
TO TERMINAL BLOCK
TO VARIOUS SWITCHES
TO TURRET MS-1 CONNECTOR
TO DRIVE O/P's
TO DRIVE O/P's
TO CONTCTORS COIL
TO OCP
TO MCP

TB-1
JY1
JYA3
JYA2
TB-2
JF1
CZ2L
JF2
CZ2M

REACTOR
LOAD METER
-ENC
10/F6
POSITION
CODER
SVMOTOR1
10/F7
SVMOTOR2
10/G6
X-AXIS
MOTOR
Z-AXIS
MOTOR
SPMOTOR
10/D7
FAN
SPINDLE
MOTOR

ISOLATION
TRANSFORMER
200VAC
3Φ
MCB
F7
MCC
K10
MCB
F12

DRAWN	RGB	REVISION-1		CUSTOMER :	DESIGNERS	TITLE : TOTAL CONNECTION DIAGRAM	DRAWING NO.
DESIGNED	SM	REVISION-2					1032721/81-4-6
APPROVED	PVR	REVISION-3		MACHINE MODEL : SUPER JOBBER ELITE		PLOT FRAME ACE STD_008_A3	PAGE NO. 7

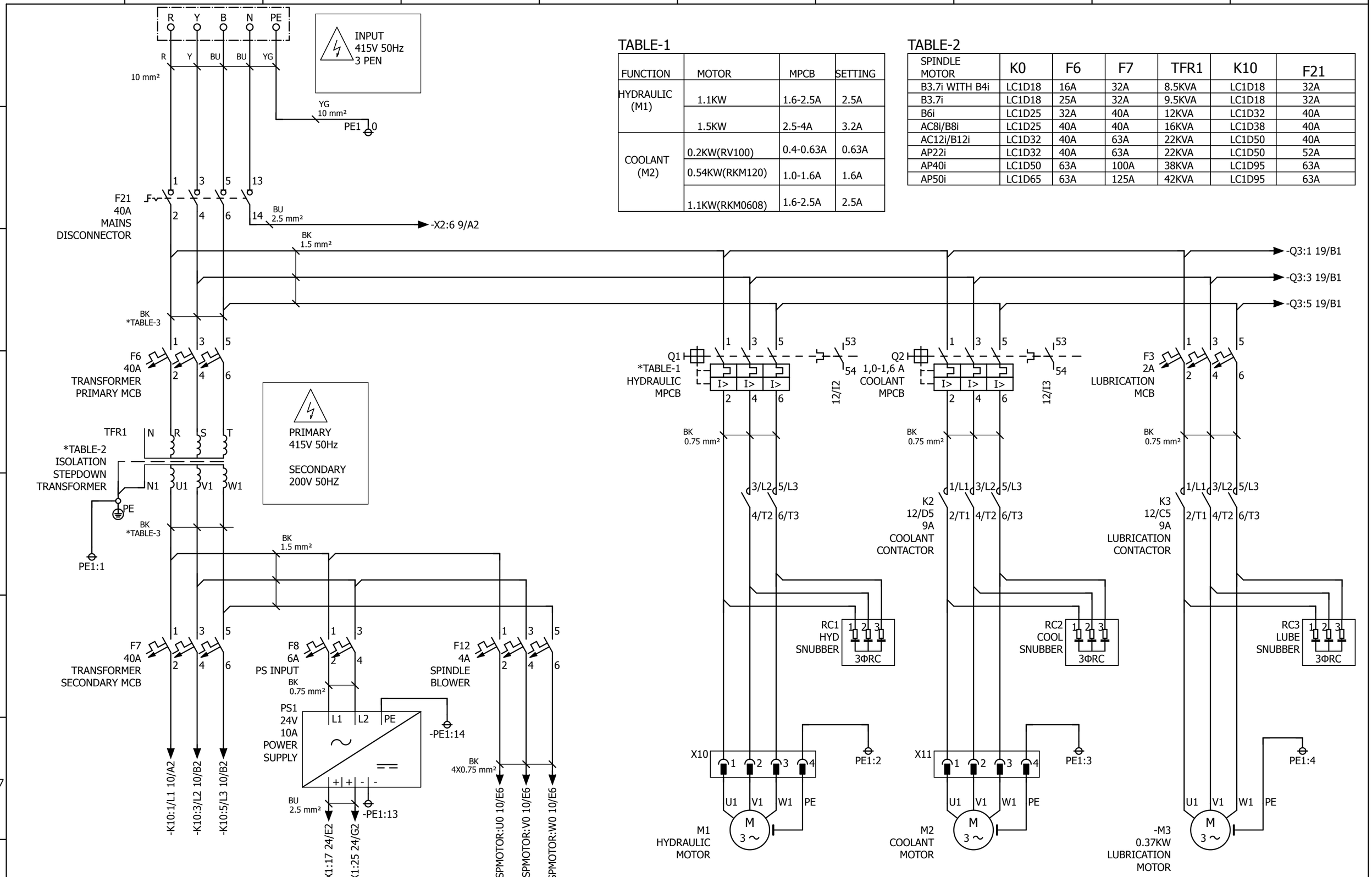

TABLE-1

FUNCTION	MOTOR	MPCB	SETTING
HYDRAULIC (M1)	1.1KW	1.6-2.5A	2.5A
	1.5KW	2.5-4A	3.2A
COOLANT (M2)	0.2KW(RV100)	0.4-0.63A	0.63A
	0.54KW(RKM120)	1.0-1.6A	1.6A
	1.1KW(RKM0608)	1.6-2.5A	2.5A

TABLE-2

SPINDLE MOTOR	K0	F6	F7	TFR1	K10	F21
B3.7i WITH B4i	LC1D18	16A	32A	8.5KVA	LC1D18	32A
B3.7i	LC1D18	25A	32A	9.5KVA	LC1D18	32A
B6i	LC1D25	32A	40A	12KVA	LC1D32	40A
AC8i/B8i	LC1D25	40A	40A	16KVA	LC1D38	40A
AC12i/B12i	LC1D32	40A	63A	22KVA	LC1D50	40A
AP22i	LC1D32	40A	63A	22KVA	LC1D50	52A
AP40i	LC1D50	63A	100A	38KVA	LC1D95	63A
AP50i	LC1D65	63A	125A	42KVA	LC1D95	63A

DRAWN	SM	REVISION-1		CUSTOMER :	TITLE : POWER CIRCUIT DIAGRAM	DRAWING NO.
DESIGNED	MGN	REVISION-2				1032721/82-4-6
APPROVED	PVR	REVISION-3		MACHINE MODEL : SUPER JOBBER ELITE	PLOT FRAME ACE STD_008_A3	PAGE NO. 8

ACE DESIGNERS

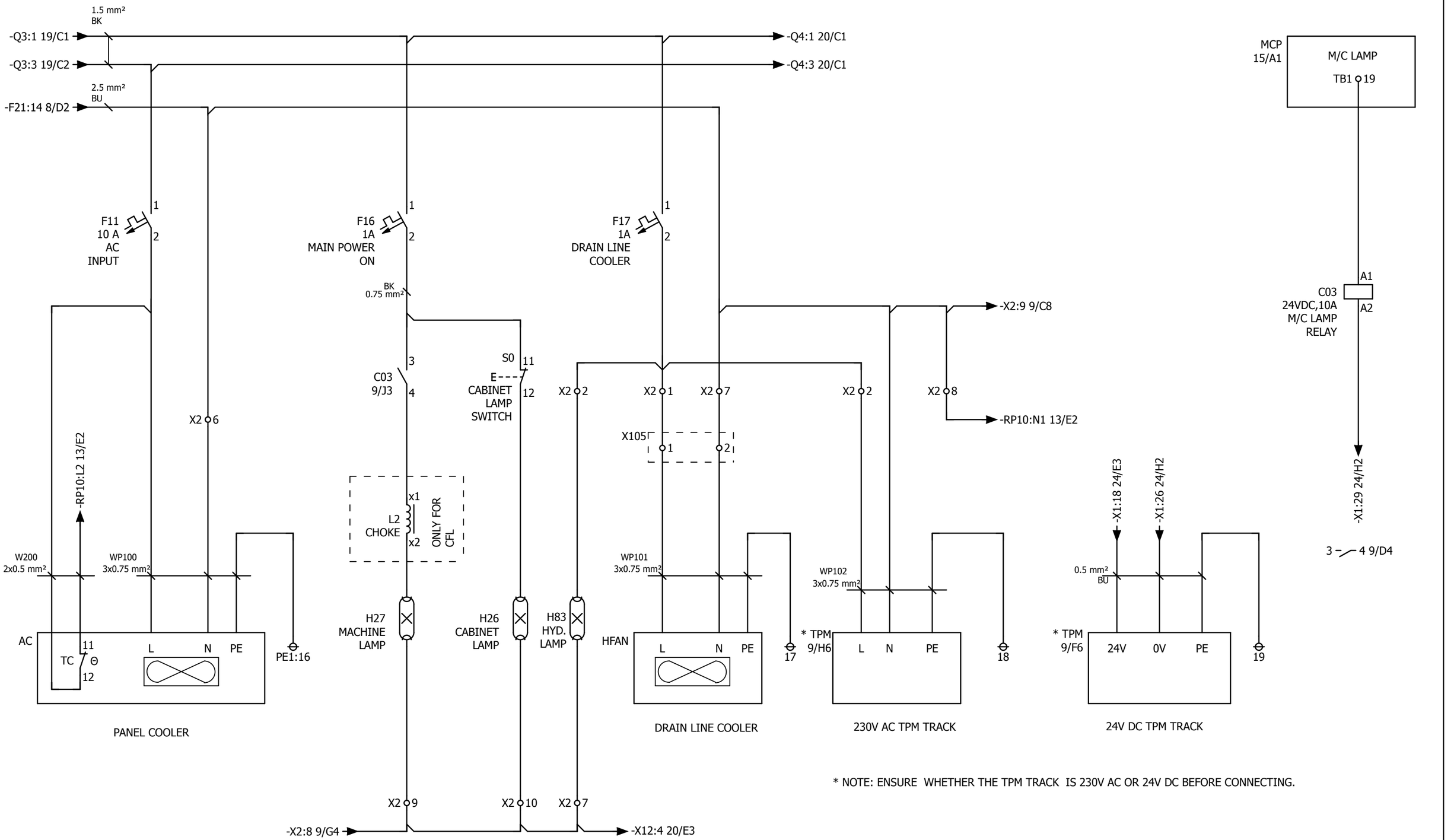

* NOTE: ENSURE WHETHER THE TPM TRACK IS 230V AC OR 24V DC BEFORE CONNECTING.

DRAWN	SM	REVISION-1		CUSTOMER :	TITLE : COOLER POWER AND POWER ON CONTROL CIRCUIT	DRAWING NO.
DESIGNED	MGN	REVISION-2				14-402/03-4-6
APPROVED	PVR	REVISION-3		MACHINE MODEL : SUPER JOBBER ELITE	PLOT FRAME ACE STD_008_A3	PAGE NO. 9

ACE DESIGNERS

FEED AND SPINDLE AMPLIFIER CONNNECTION DETAILS

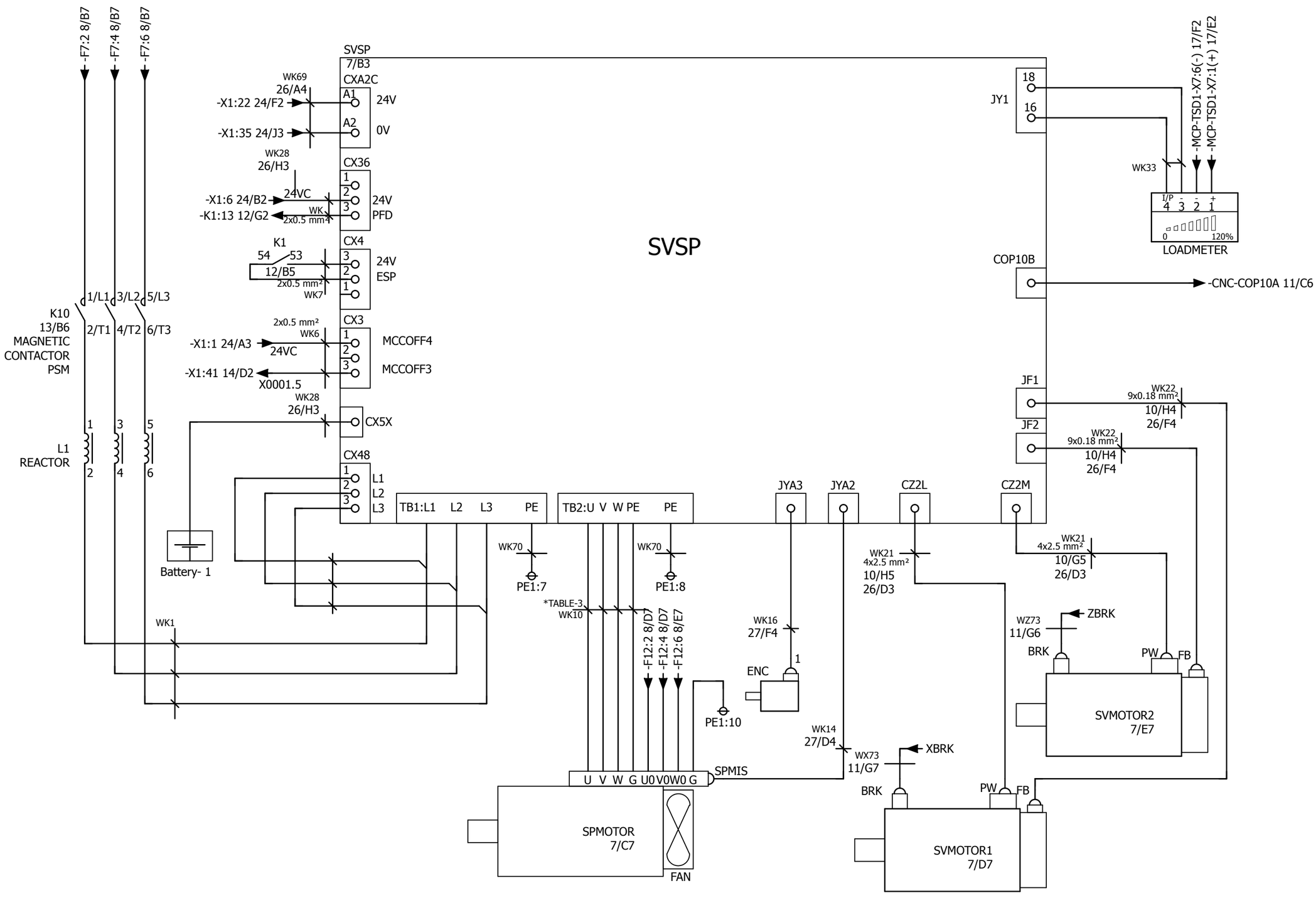

DRAWN	RGB	REVISION-1		CUSTOMER :	TITLE : FEED AND SPINDLE AMPLIFIER CONNECTION DETAILS	DRAWING NO.
DESIGNED	SM	REVISION-2				1032721/83-4-6
APPROVED	PVR	REVISION-3		MACHINE MODEL : SUPER JOBBER ELITE	PLOT FRAME ACE STD_008_A3	PAGE NO. 10

ACE DESIGNERS

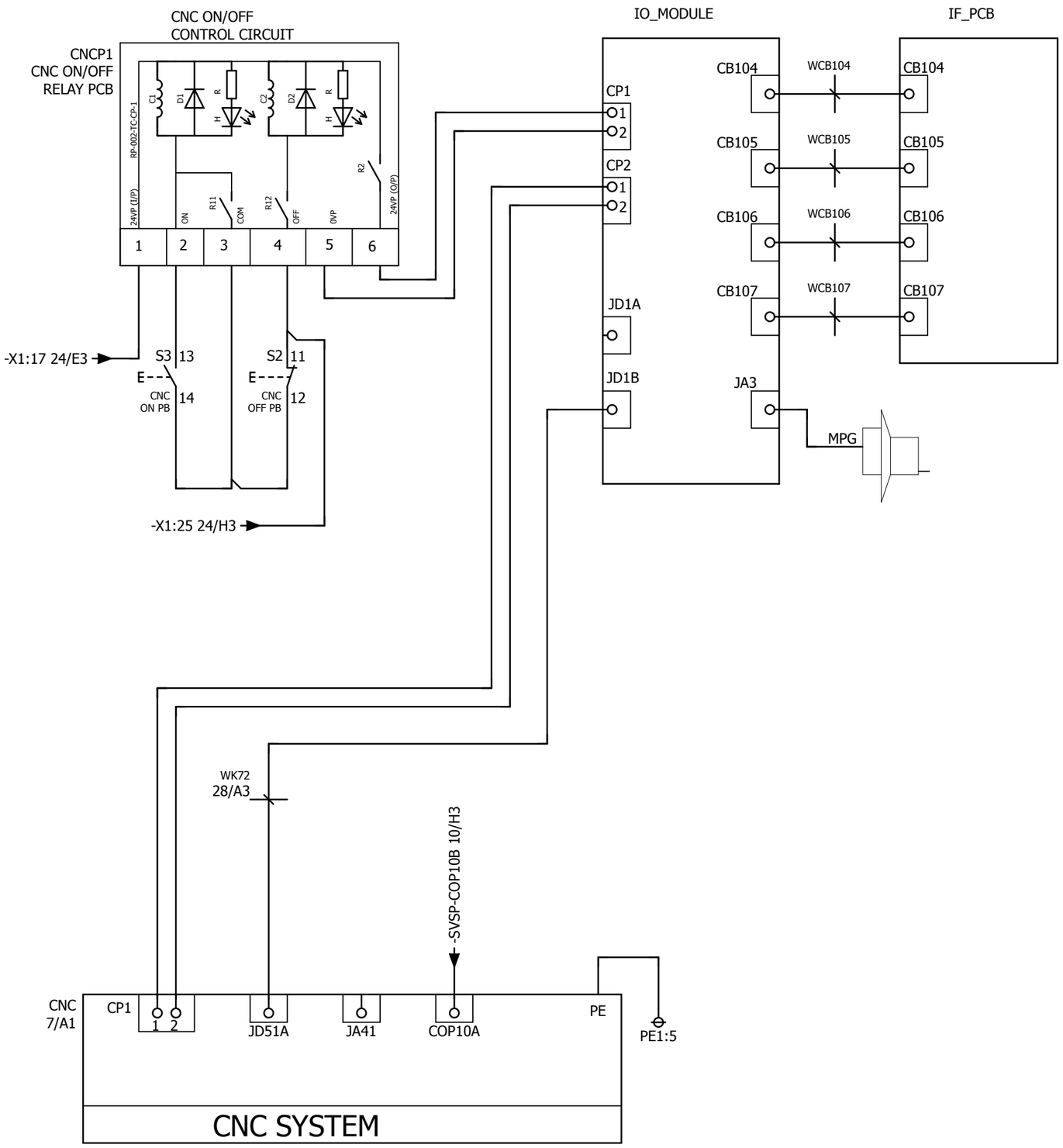

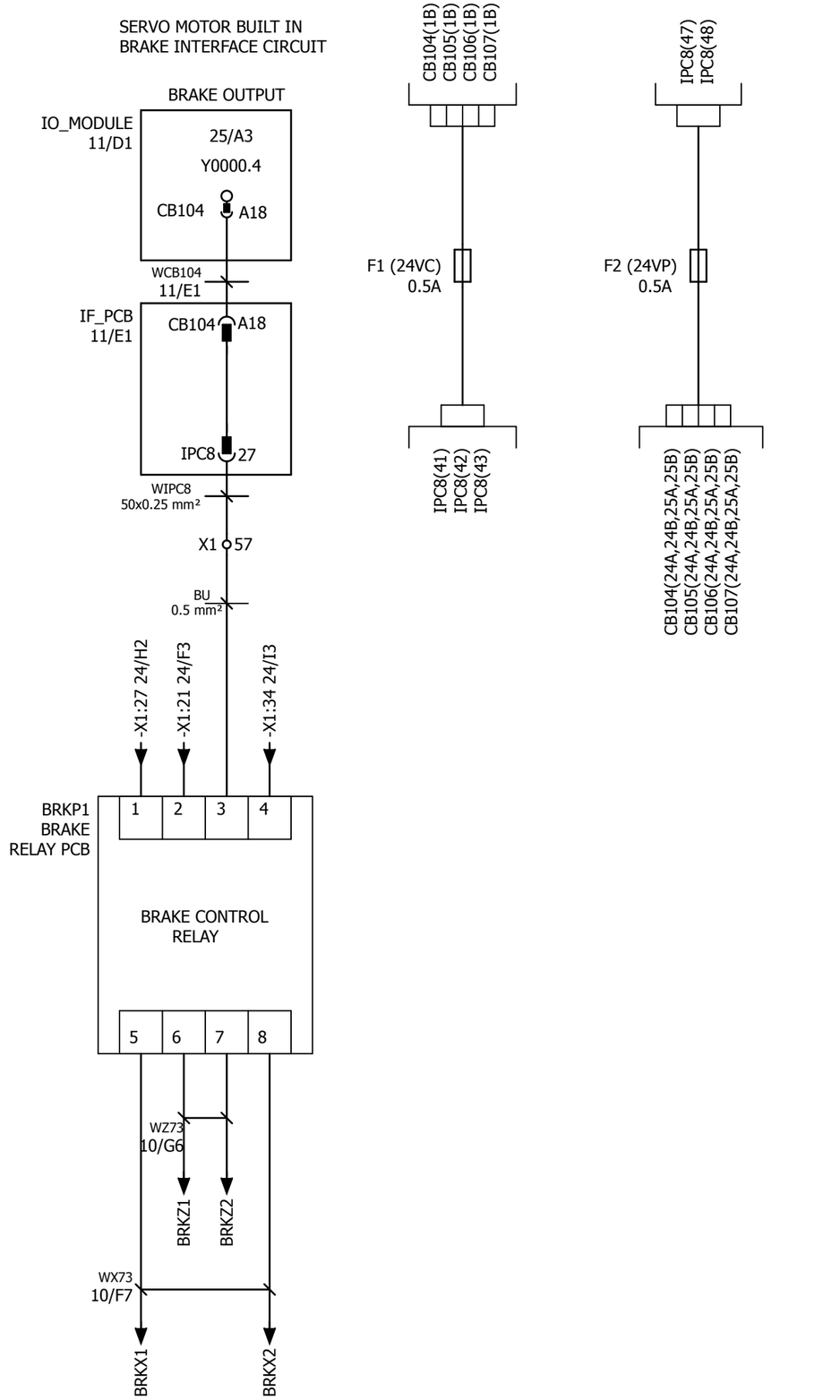

DRAWN	MGN	REVISION-1		CUSTOMER :	DESIGNERS	DRAWING NO.
DESIGNED	MGN	REVISION-2			TITLE : CNC ON/OFF I/O MODULE AND SERVO MOTORBRAKE CONNECTION	1032721/84-4-6
APPROVED	PVR	REVISION-3		MACHINE MODEL : SUPER JOBBER ELITE		PAGE NO. 11

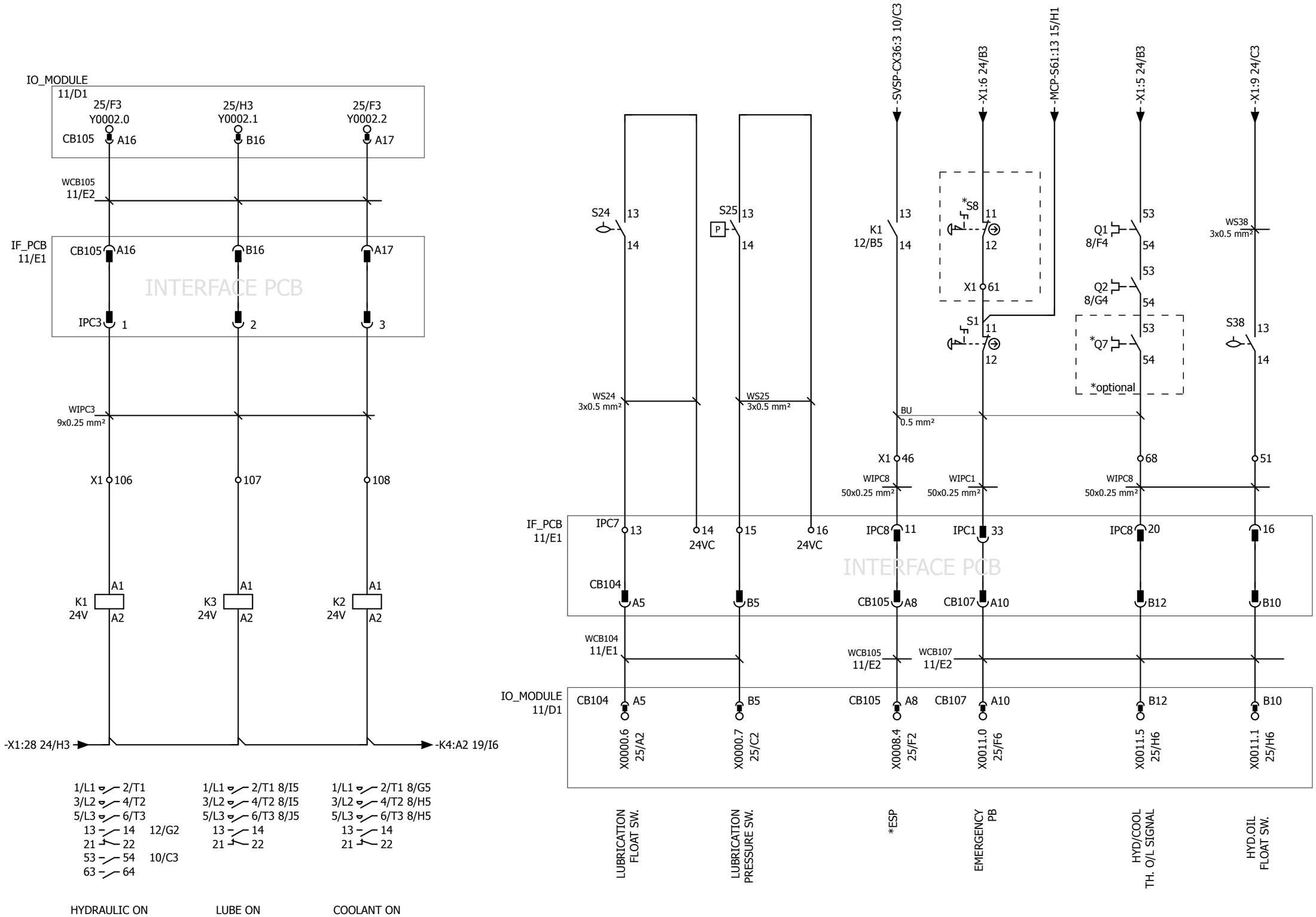

*NOTE : IF S8- EXTERNAL EMERGENCY SW. IS NOT USED, CONNECT S1/11 TO S61/13

DRAWN	SM	REVISION-1		CUSTOMER :	TITLE : EMERGENCY AND CONTACTOR CONTROL CIRCUIT	DRAWING NO.
DESIGNED	MGN	REVISION-2				14-402/05-4-6
APPROVED	PVR	REVISION-3		MACHINE MODEL : SUPER JOBBER ELITE	PLOT FRAME ACE STD_008_A3	PAGE NO. 12

ACE DESIGNERS

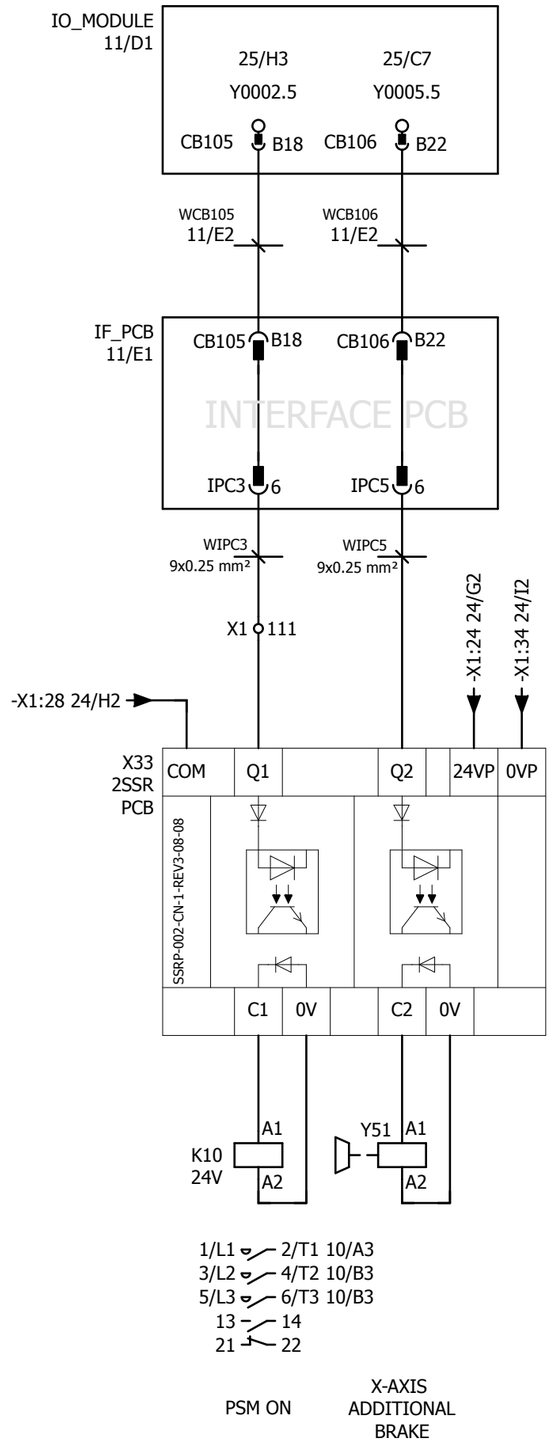

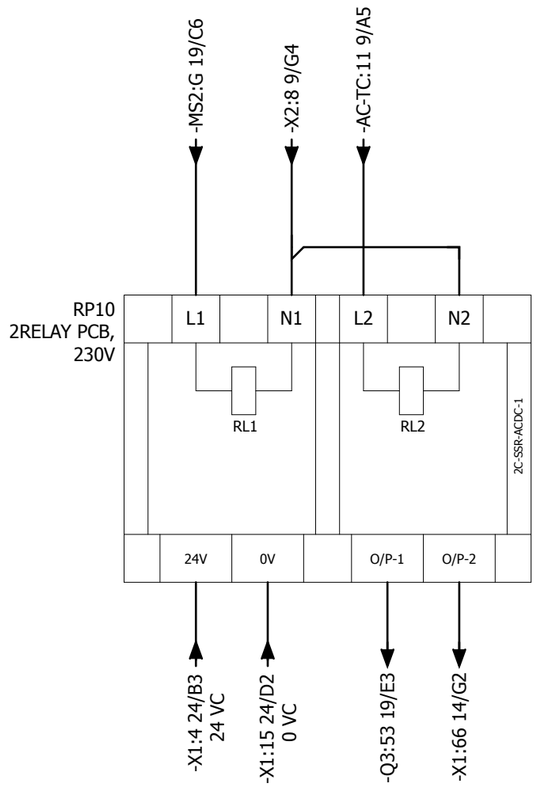

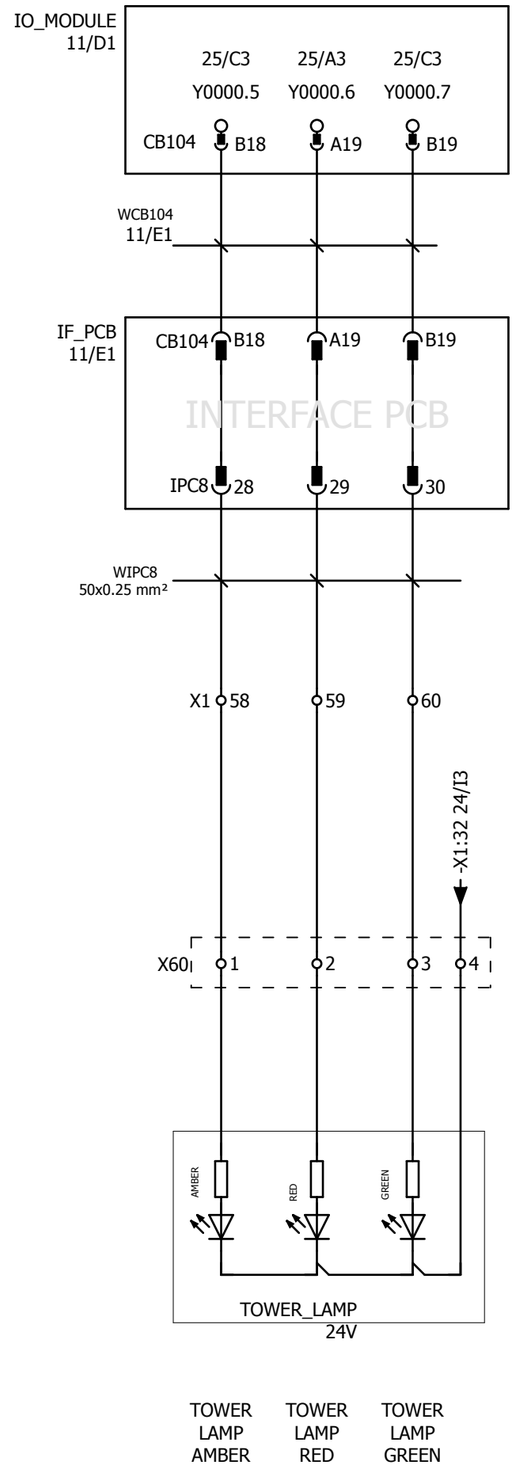

DRAWN	SM	REVISION-1		CUSTOMER :	TITLE : X33 SSR PCB ,TOWER LAMP AND RP10 2 RELAY PCB CONNECTION	DRAWING NO. 14-402/14-4-6
DESIGNED	MGN	REVISION-2				
APPROVED	PVR	REVISION-3		MACHINE MODEL : SUPER JOBBER ELITE	PLOT FRAME ACE STD_008_A3	PAGE NO. 13

ACE DESIGNERS

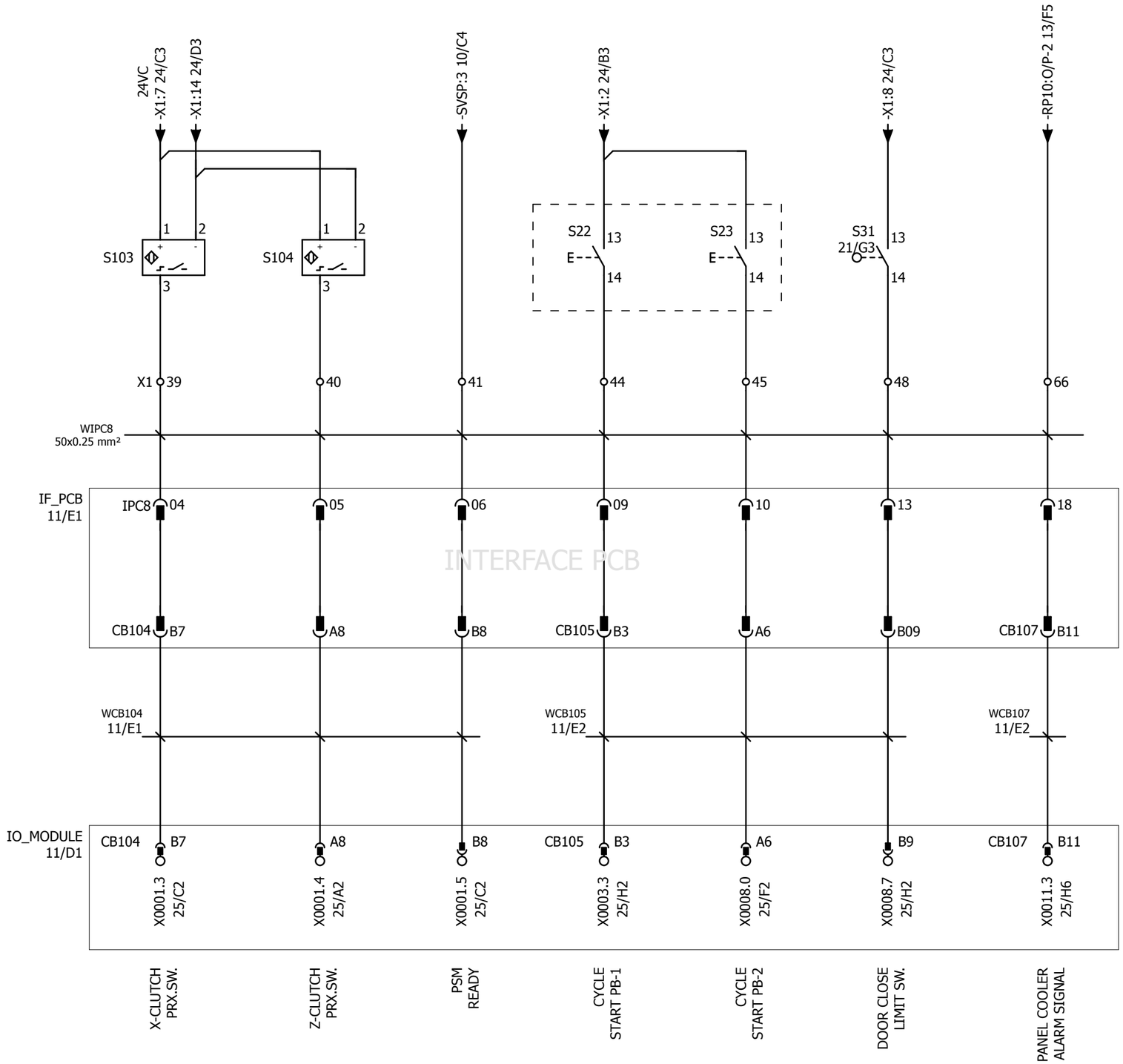

DRAWN	SM	REVISION-1		CUSTOMER :	ACE DESIGNERS	TITLE : IPC8 CABLE CONNECTION DETAILS	DRAWING NO.
DESIGNED	MGN	REVISION-2					14-402/07-4-6
APPROVED	PVR	REVISION-3		MACHINE MODEL : SUPER JOBBER ELITE		PLOT FRAME ACE STD_008_A3	PAGE NO. 14

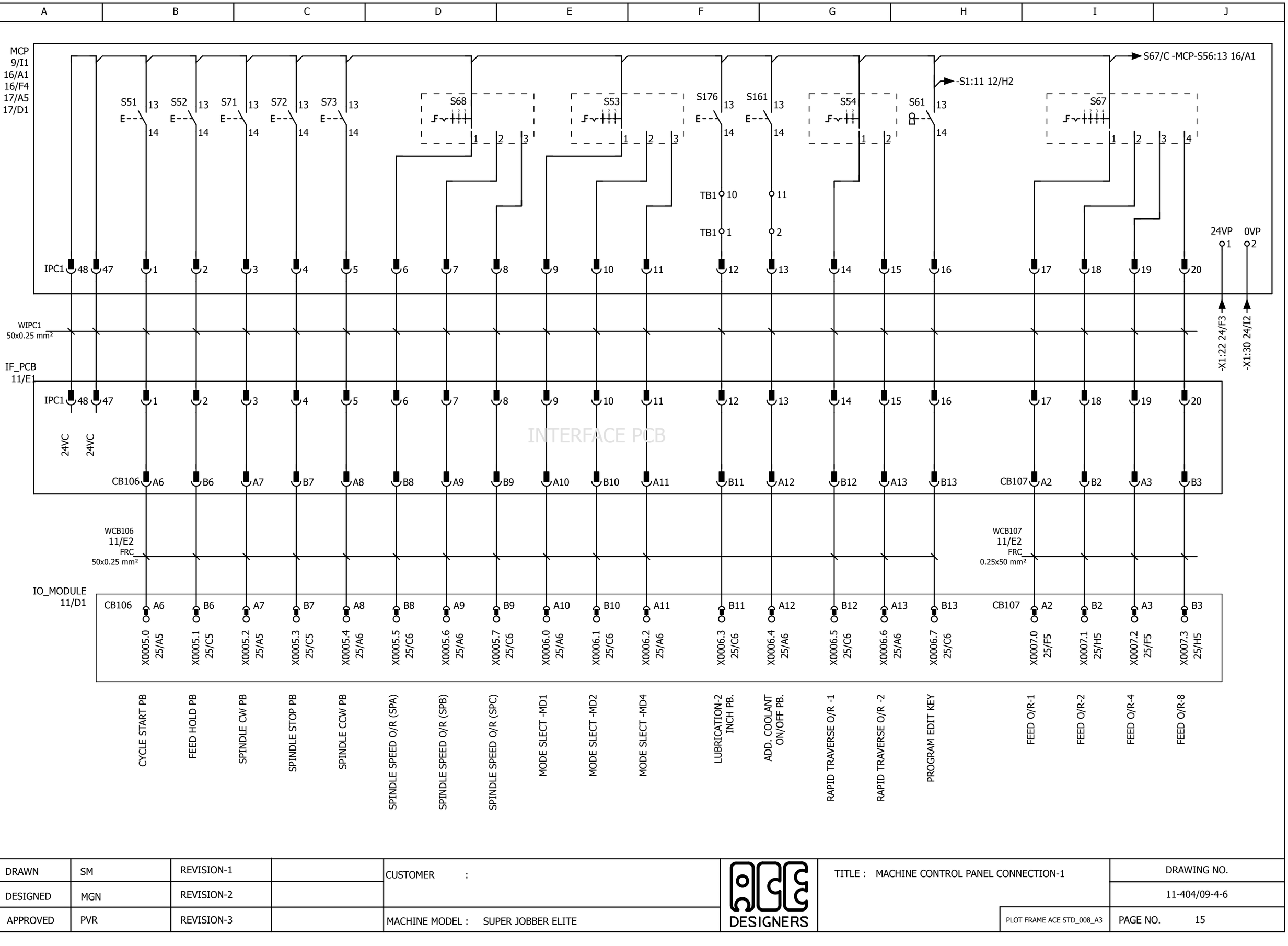

DRAWN	SM	REVISION-1		CUSTOMER :	TITLE : MACHINE CONTROL PANEL CONNECTION-1	DRAWING NO.
DESIGNED	MGN	REVISION-2				11-404/09-4-6
APPROVED	PVR	REVISION-3		MACHINE MODEL : SUPER JOBBER ELITE	PLOT FRAME ACE STD_008_A3	PAGE NO. 15

ACE DESIGNERS

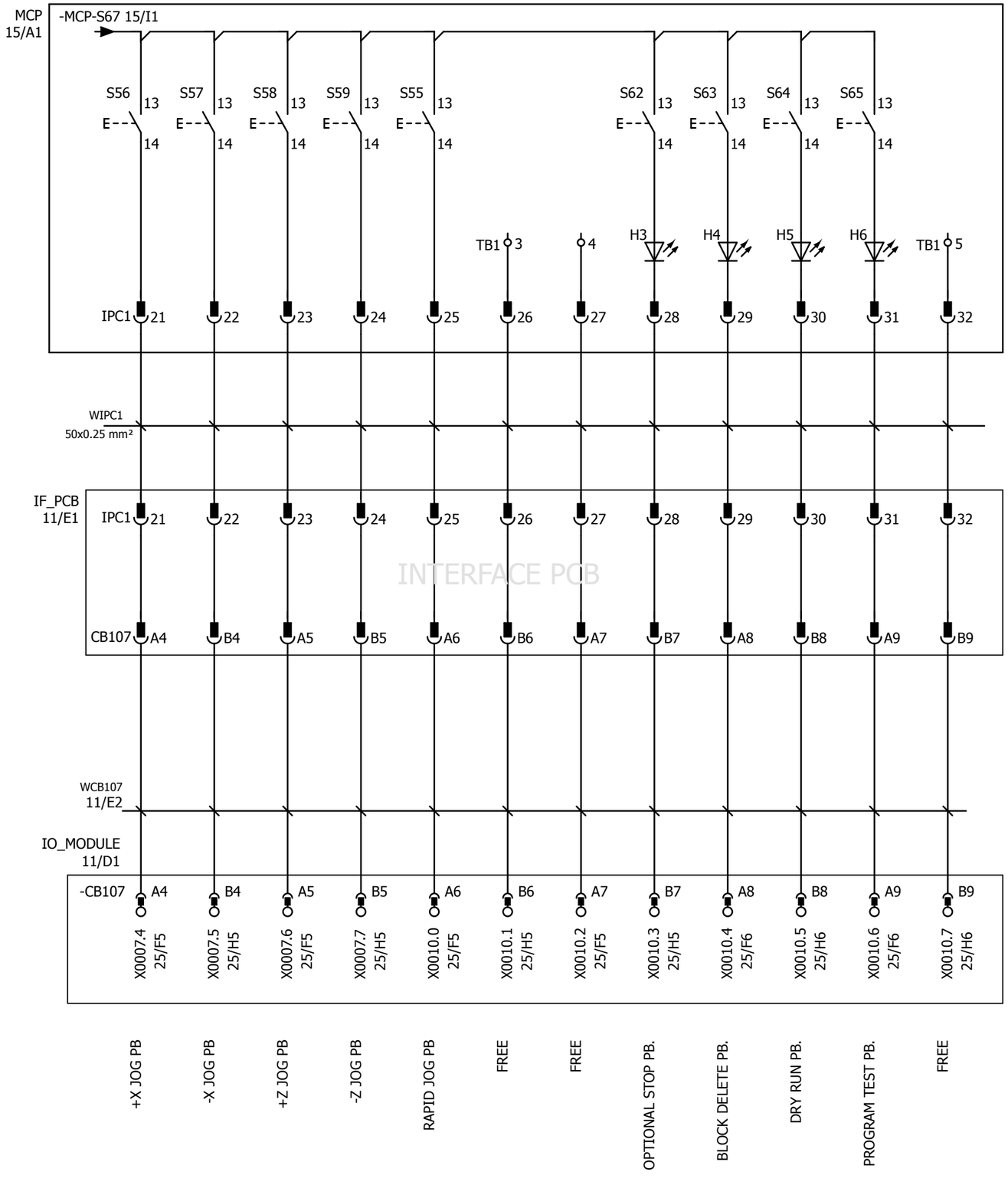

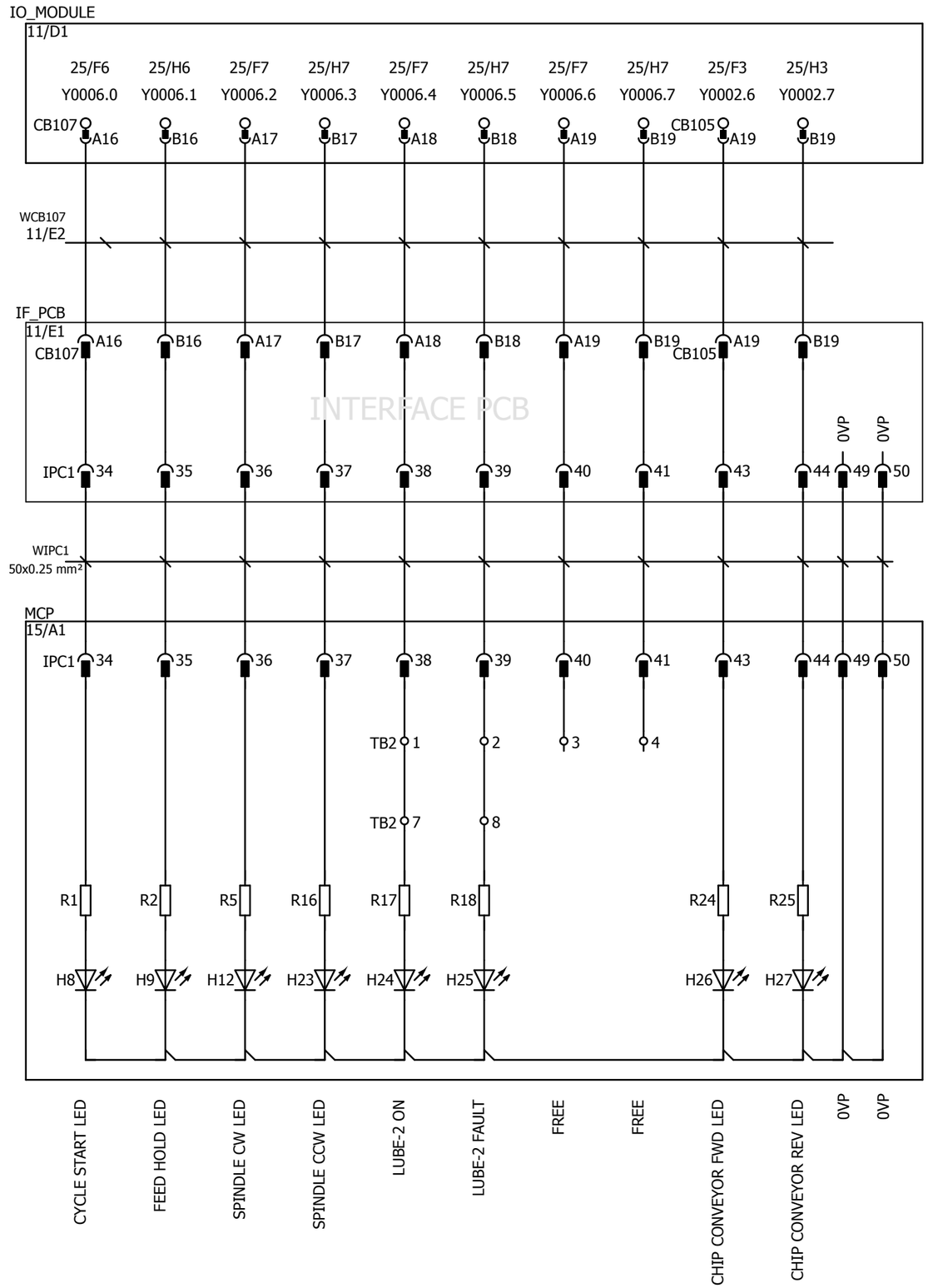

DRAWN	SM	REVISION-1		CUSTOMER :	DESIGNERS	TITLE : MACHINE CONTROL PANEL CONNECTION-2	DRAWING NO.
DESIGNED	MGN	REVISION-2					14-402/08-4-6
APPROVED	PVR	REVISION-3		MACHINE MODEL : SUPER JOBBER ELITE		PLOT FRAME ACE STD_008_A3	PAGE NO. 16

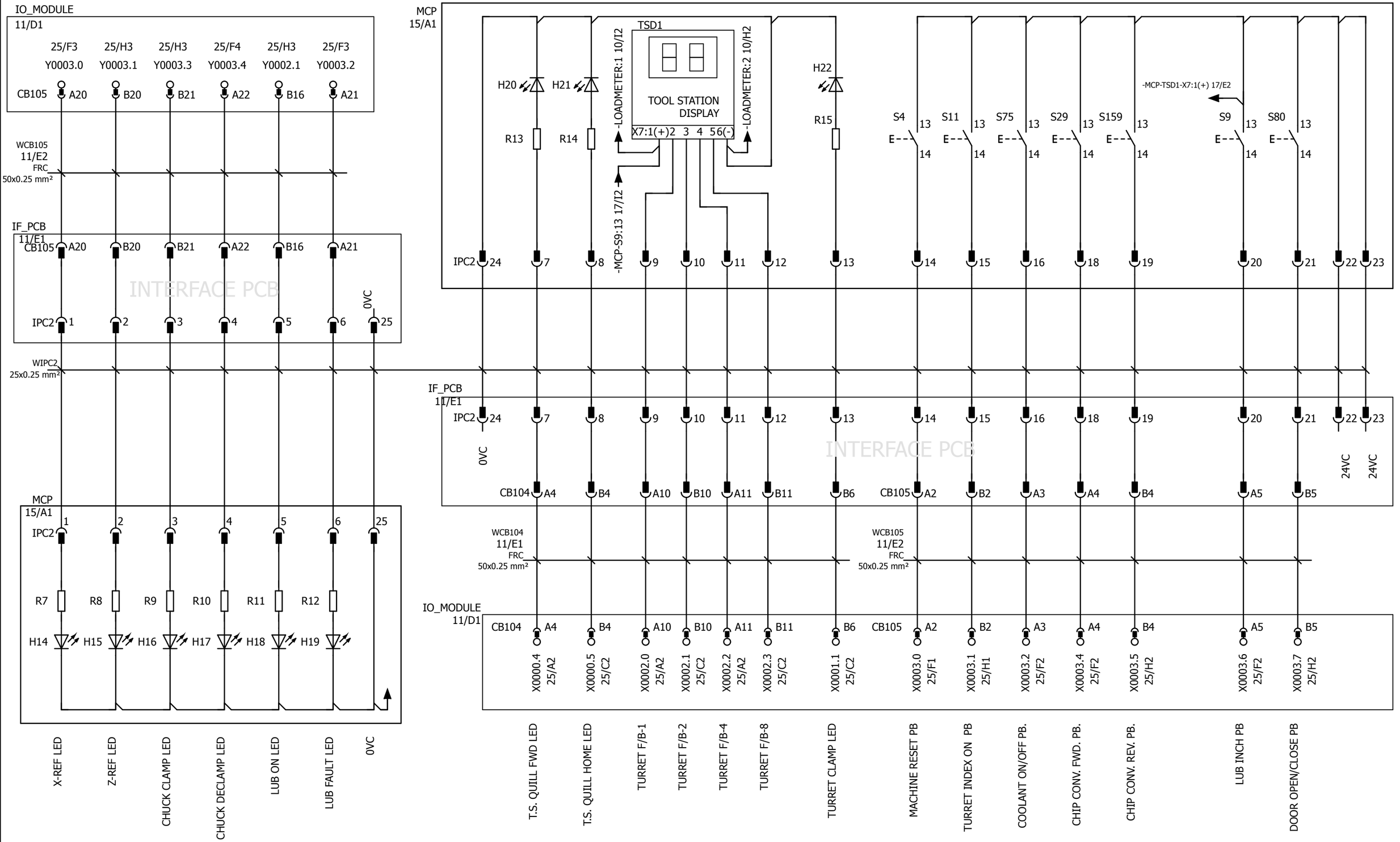

DRAWN	SM	REVISION-1		CUSTOMER :	ACE DESIGNERS	TITLE : MACHINE CONTROL PANEL CONNECTION-3	DRAWING NO.
DESIGNED	MGN	REVISION-2					11-404/11-4-6
APPROVED	PVR	REVISION-3		MACHINE MODEL : SUPER JOBBER ELITE		PLOT FRAME ACE STD_008_A3	PAGE NO. 17

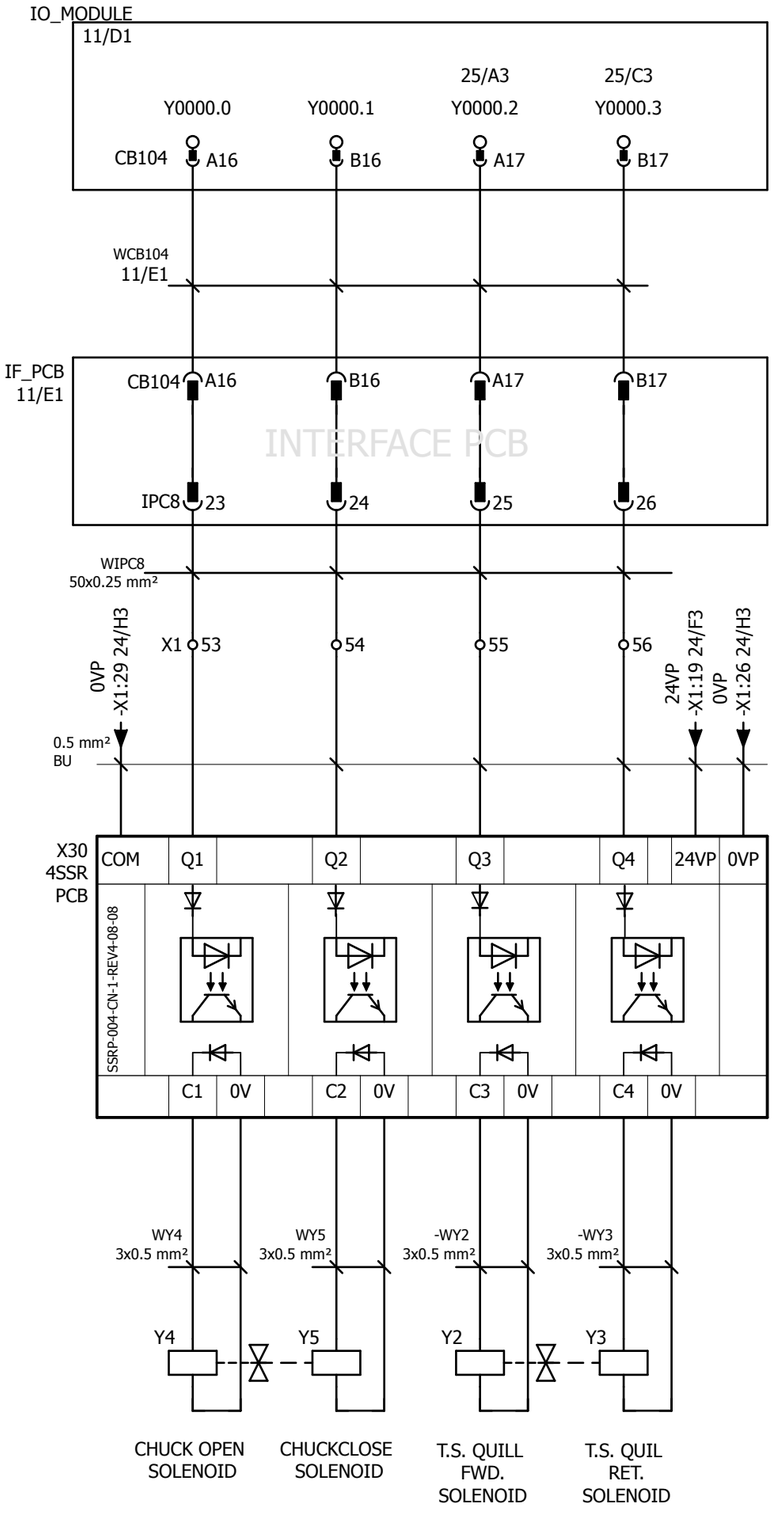

Note: All Solenoids should be grounded.

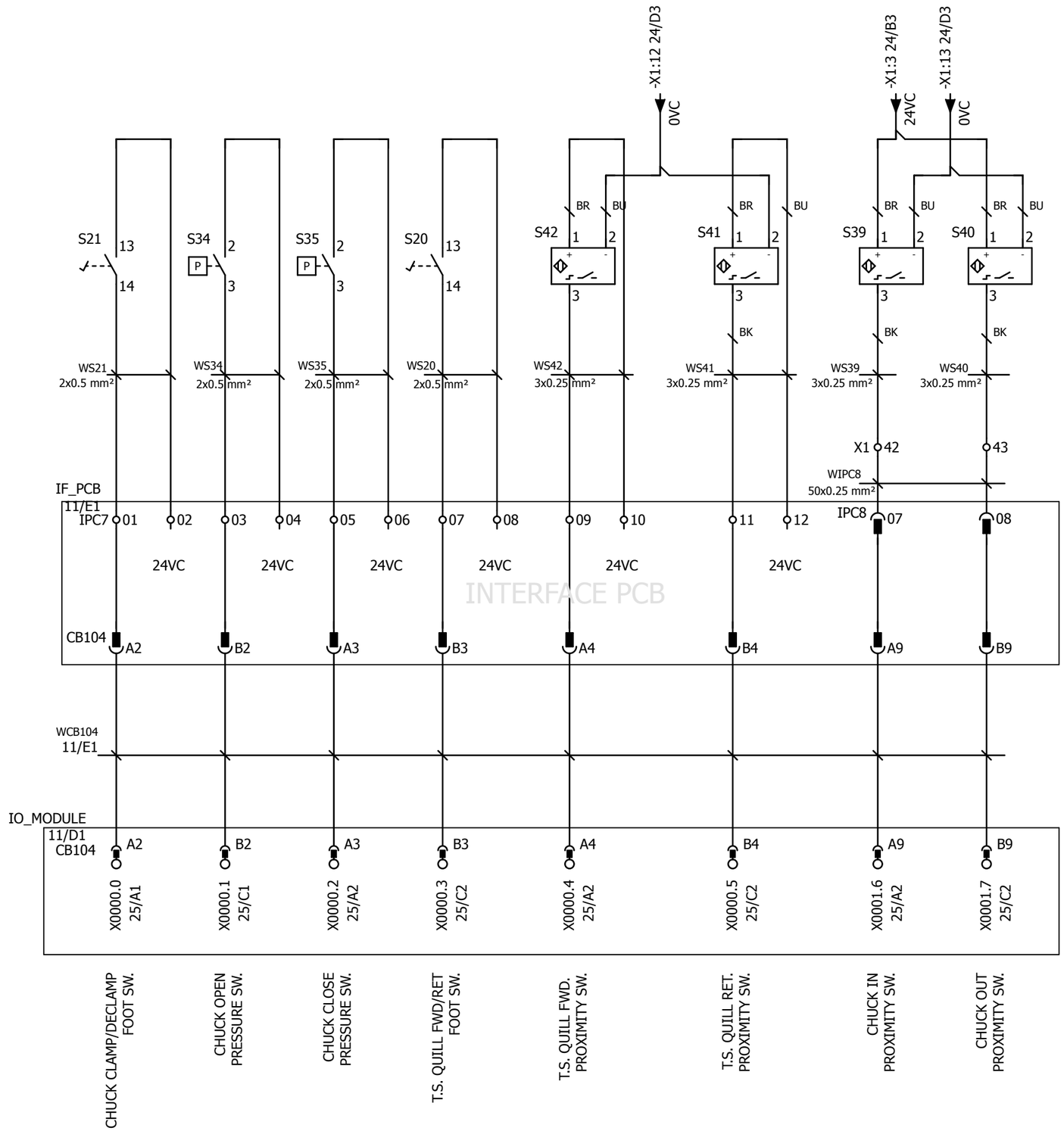

NOTE: PROXIMITY TYPE FOOT SW. 0VC TO BE CONNECTED TO X1.16

DRAWN	SM	REVISION-1		CUSTOMER :	TITLE : CHUCK AND TAILSTOCK QUILL INTERFACE CIRCUIT DIAGRAM	DRAWING NO. 11-404/12-4-6
DESIGNED	MGN	REVISION-2				
APPROVED	PVR	REVISION-3		MACHINE MODEL : SUPER JOBBER ELITE	PLOT FRAME ACE STD_008_A3	PAGE NO. 18

ACE DESIGNERS

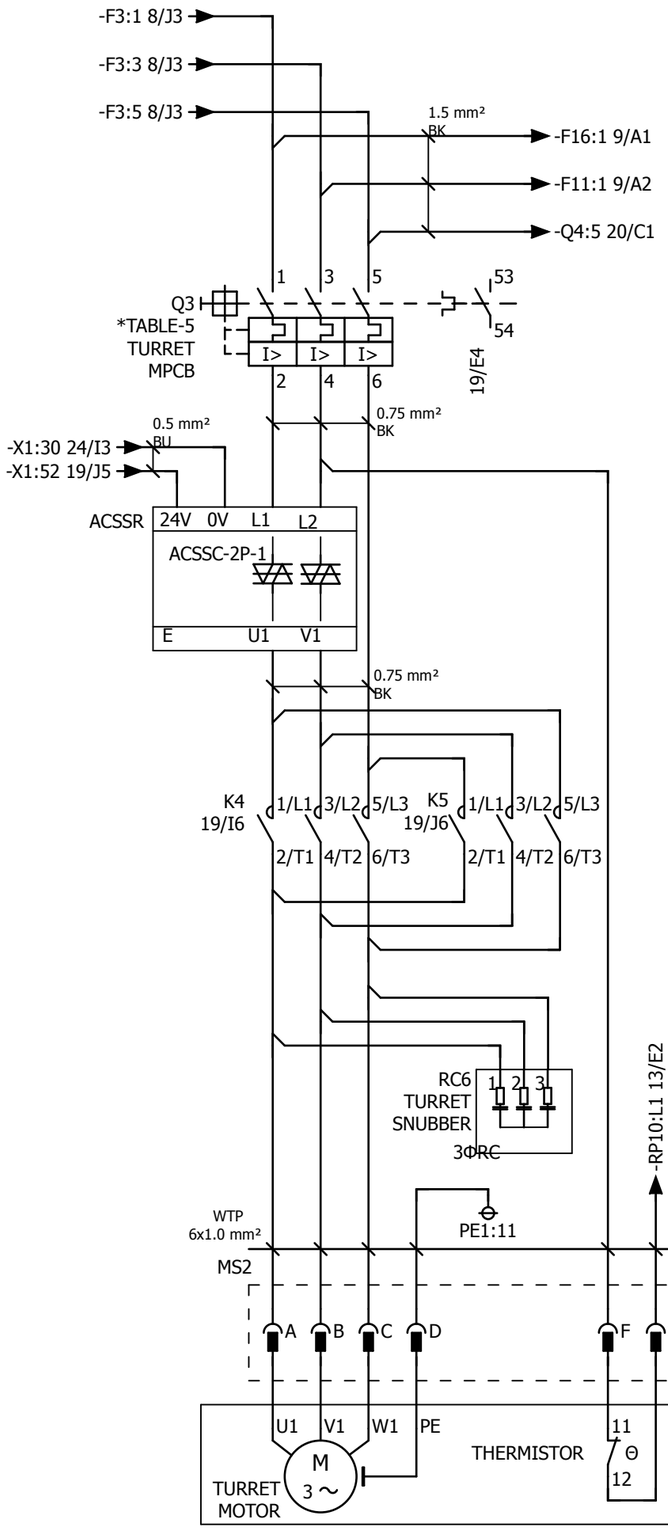

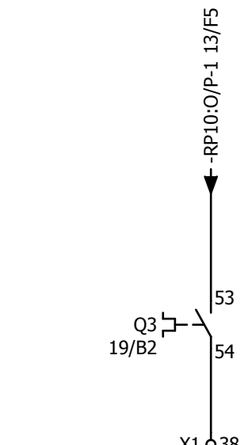

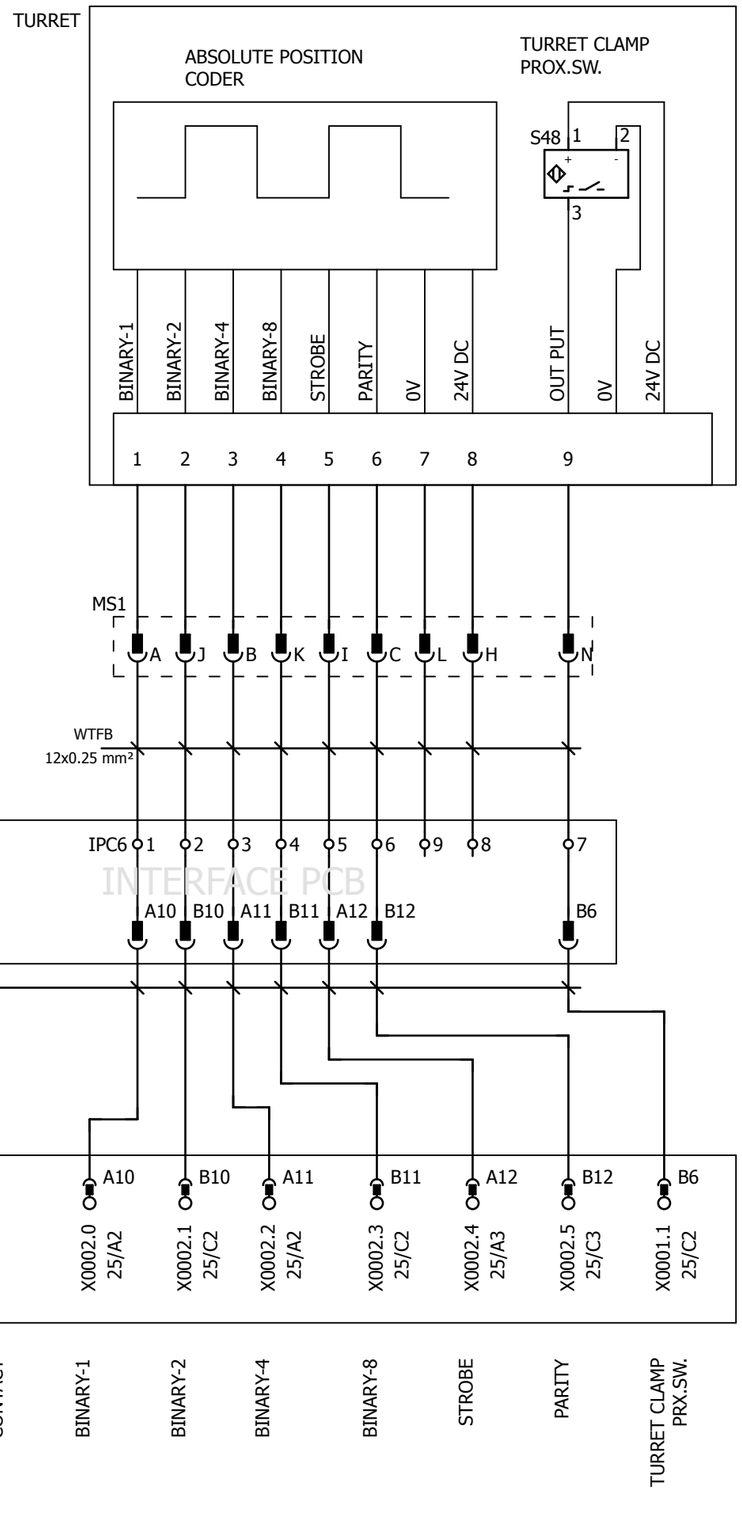

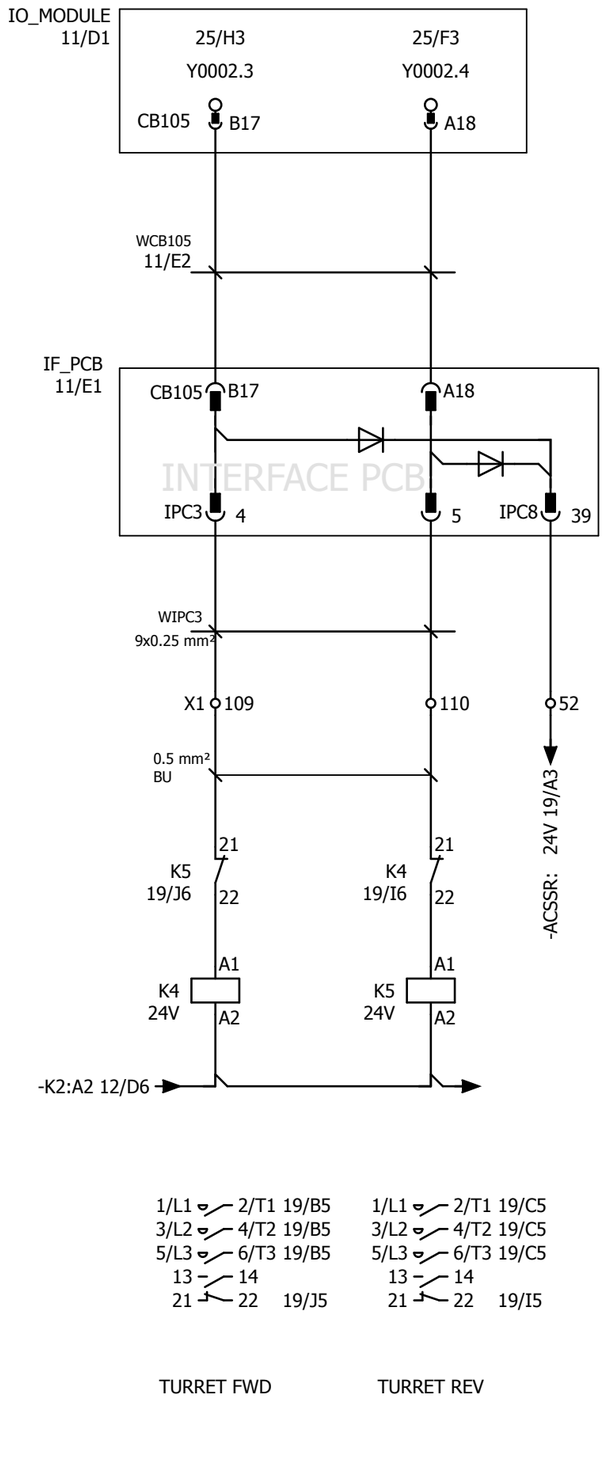

DRAWN	SM	REVISION-1		CUSTOMER :	ACE DESIGNERS	TITLE : TURRET INTERFACE CIRCUIT DIAGRAM	DRAWING NO.
DESIGNED	MGN	REVISION-2					14-402/09-4-6
APPROVED	PVR	REVISION-3		MACHINE MODEL : SUPER JOBBER ELITE		PLOT FRAME ACE STD_008_A3	PAGE NO. 19

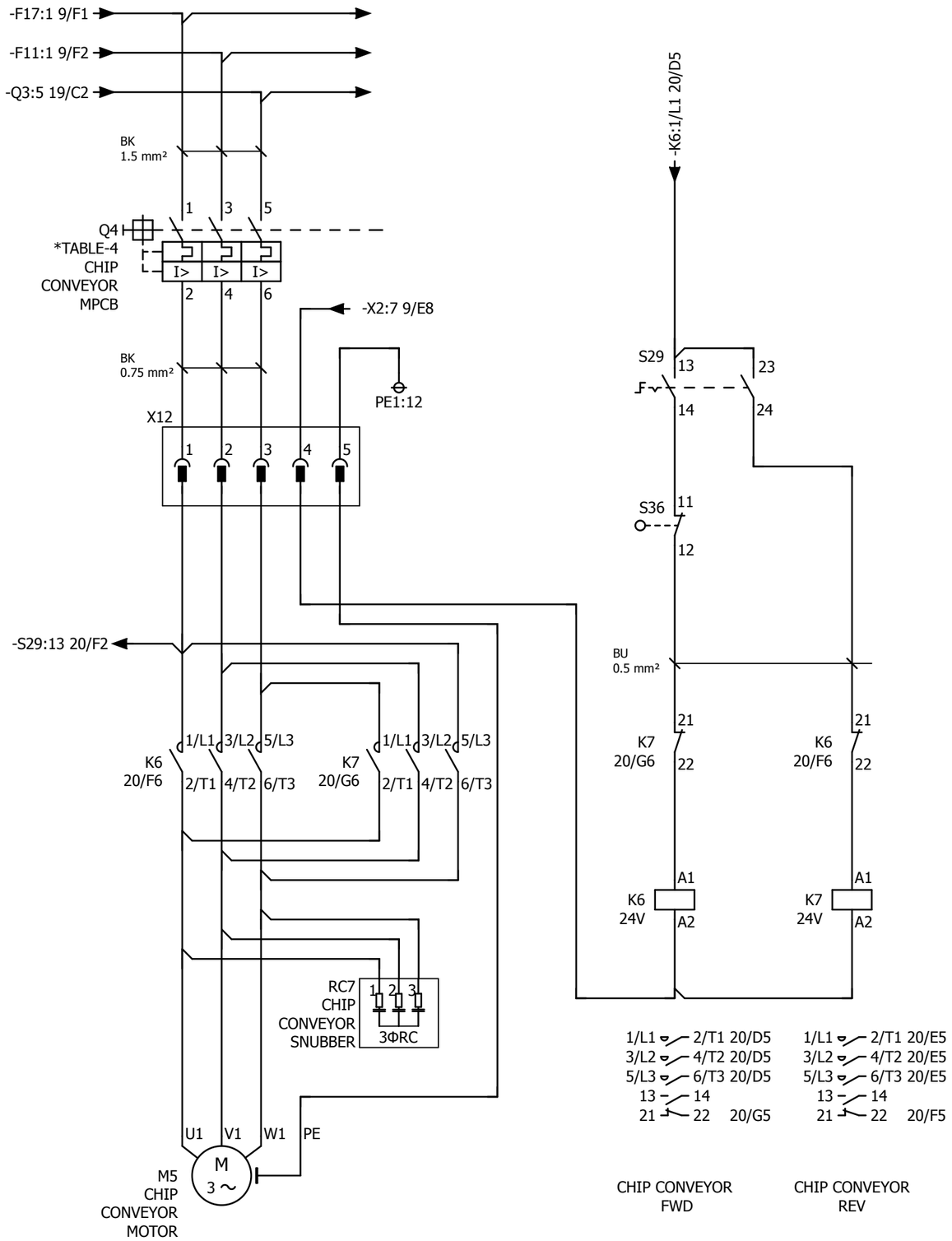

TABLE-4

CONVEYOR	MOTOR	MPCB	SETTING
M10	0.25HP	0.4-0.63A	0.63A
CT7/CT3/ CONSEP1000/ 2000	0.5HP	0.63-1.0A	1.0A

DRAWN	RGB	REVISION-1		CUSTOMER :	ACE DESIGNERS	TITLE : CHIP CONVEYOR HARD WIRED INTERFACE CIRCUIT DIAGRAM
DESIGNED	SM	REVISION-2				DRAWING NO. 14-403/14-4-6
APPROVED	PVR	REVISION-3		MACHINE MODEL : SUPER JOBBER ELITE		PLOT FRAME ACE STD_008_A3 PAGE NO. 20

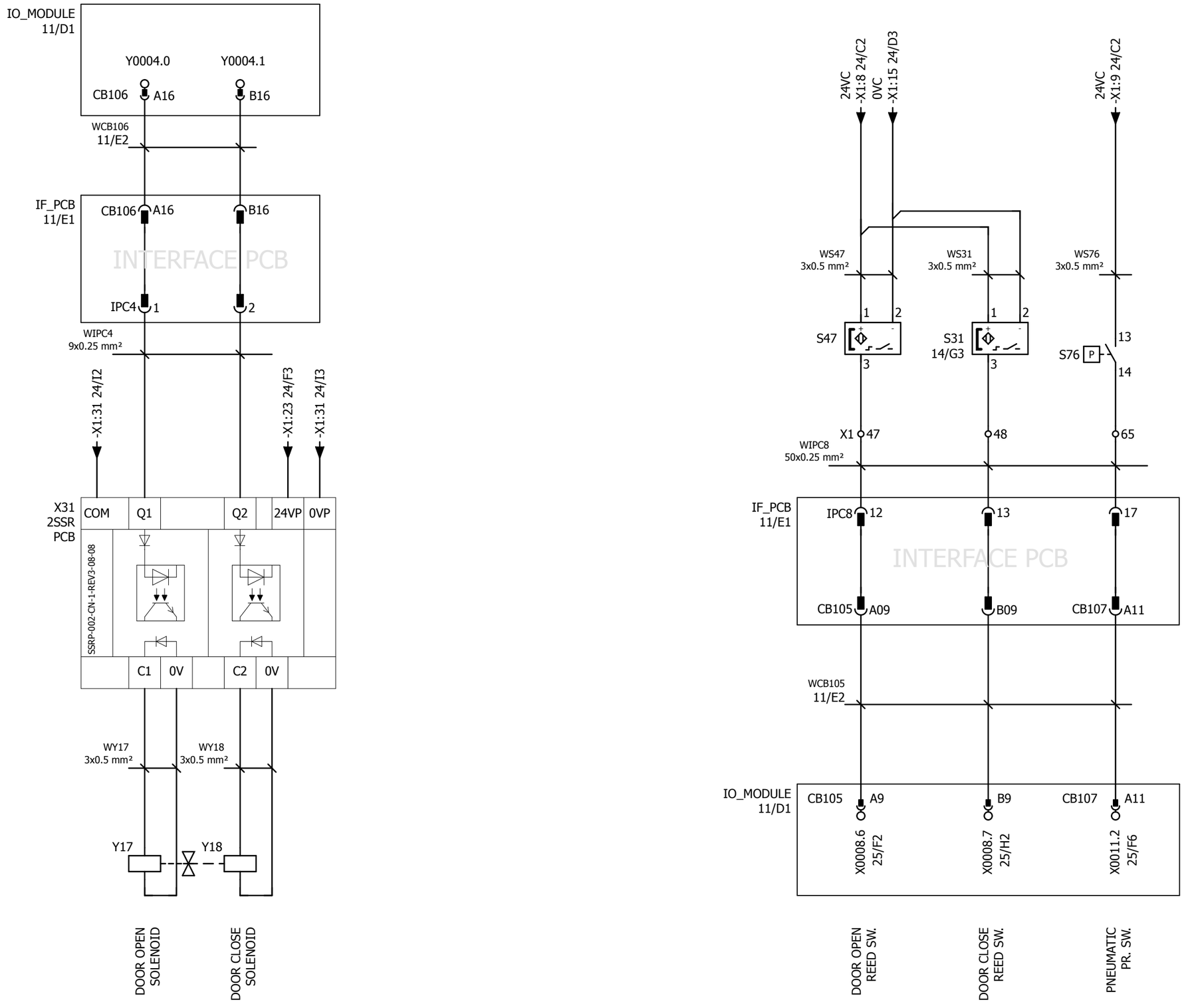

DRAWN	SM	REVISION-1		CUSTOMER :	TITLE : AUTO DOOR INTERFACE CIRCUIT DIAGRAM	DRAWING NO.
DESIGNED	MGN	REVISION-2				11-404/15-4-6
APPROVED	PVR	REVISION-3		MACHINE MODEL : SUPER JOBBER ELITE	PLOT FRAME ACE STD_008_A3	PAGE NO. 21

DESIGNERS

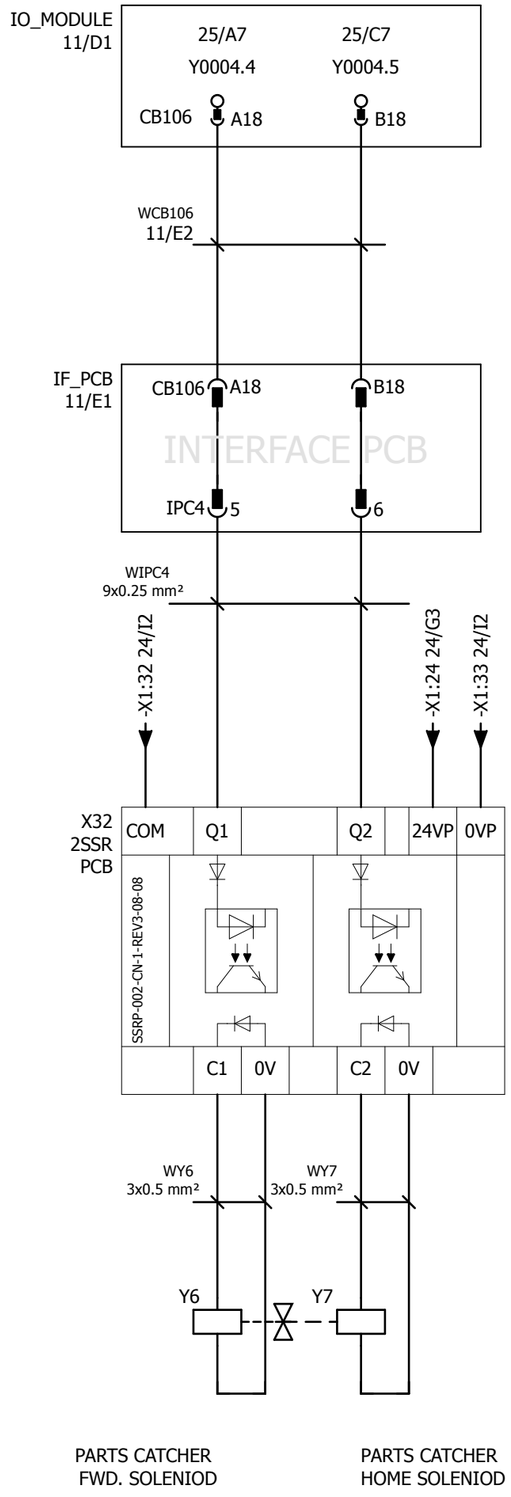

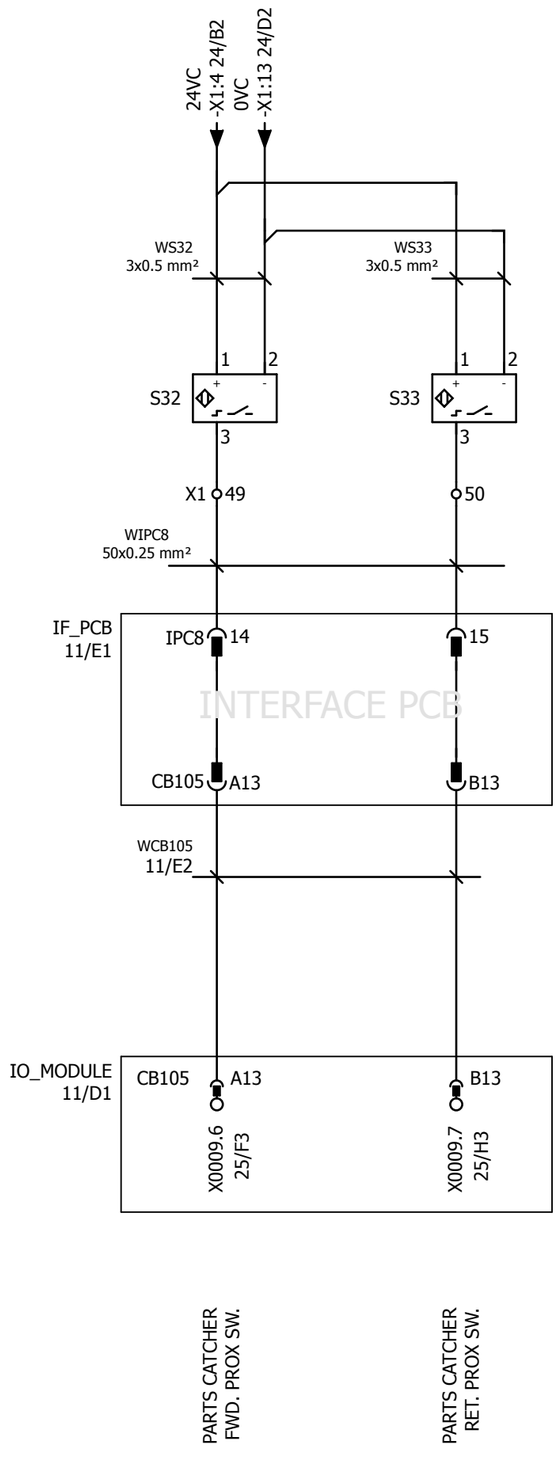

DRAWN	SM	REVISION-1		CUSTOMER :	DESIGNERS	TITLE : PARTS CATCHER INTERFACE CIRCUIT DIAGRAM	DRAWING NO. 11-404/16-4-6
DESIGNED	MGN	REVISION-2					
APPROVED	PVR	REVISION-3		MACHINE MODEL : SUPER JOBBER ELITE		PLOT FRAME ACE STD_008_A3	PAGE NO. 22

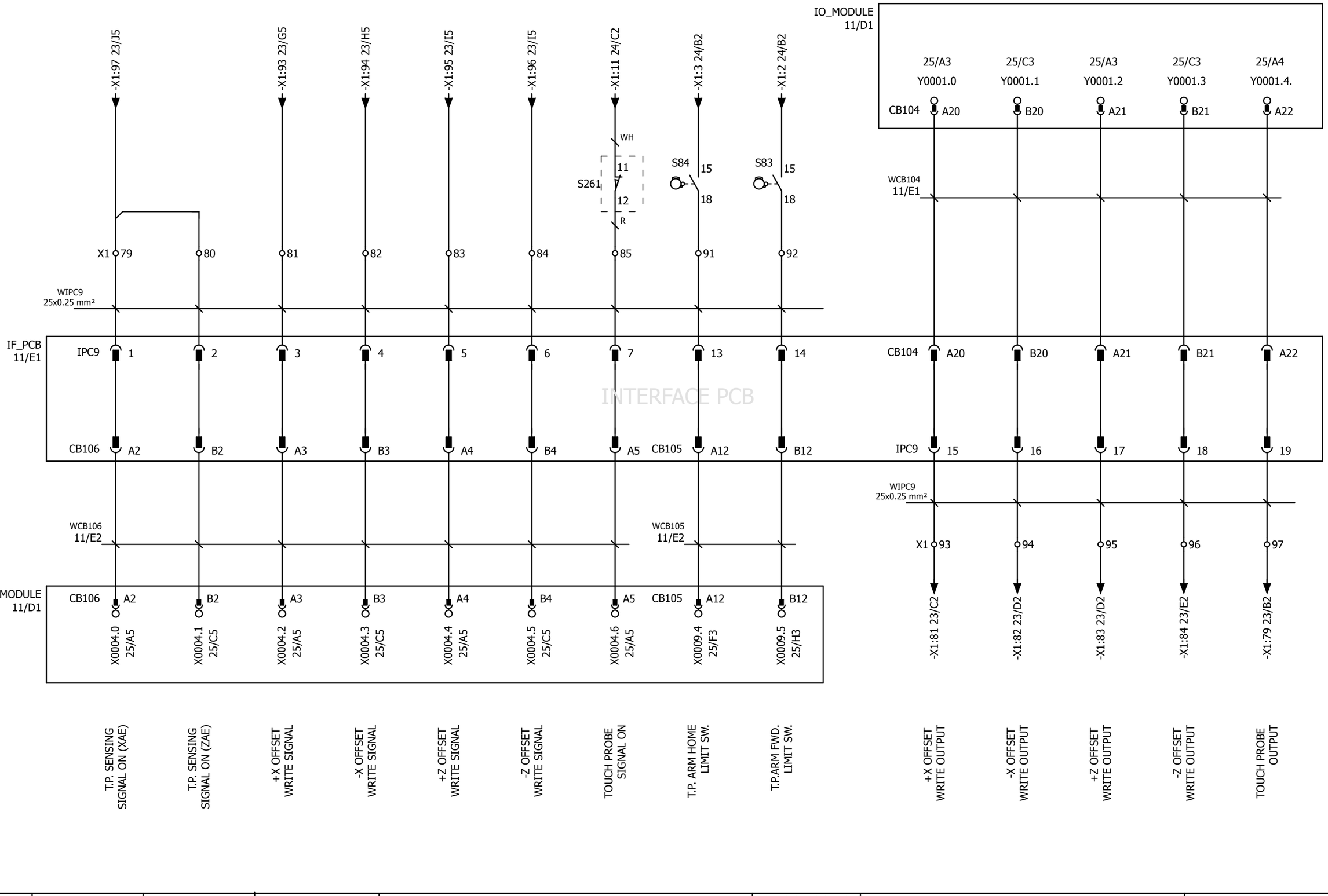

DRAWN	SM	REVISION-1		CUSTOMER :	DESIGNERS	TITLE : TOUCH PROBE INTERFACE CIRCUIT DIAGRAM	DRAWING NO. 11-404/18-4-6
DESIGNED	MGN	REVISION-2					
APPROVED	PVR	REVISION-3		MACHINE MODEL : SUPER JOBBER ELITE		PLOT FRAME ACE STD_008_A3	PAGE NO. 23

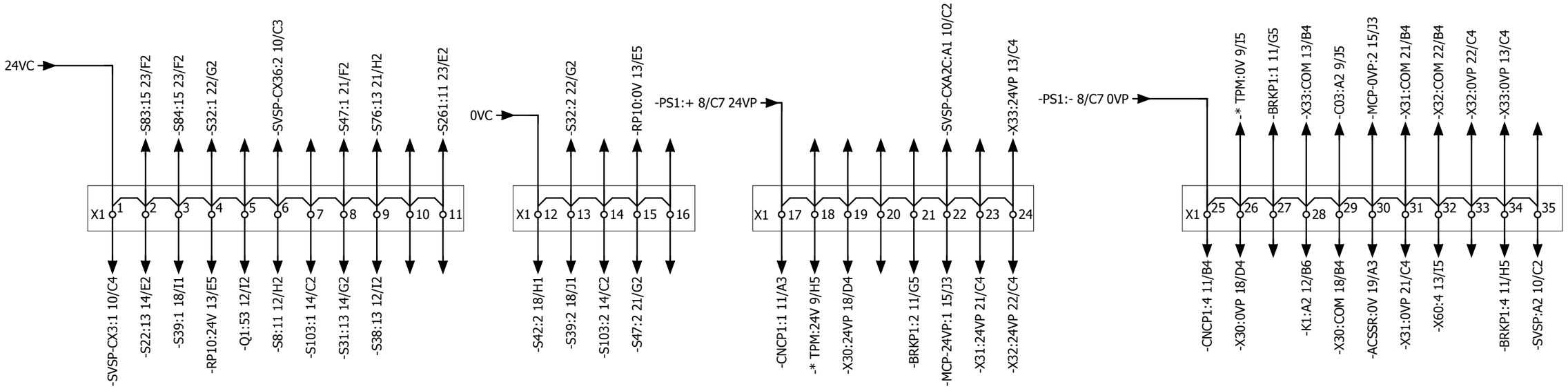

PE1 EARTH BUS BAR	0 8/C2	16 9/C6	
	1 8/A5	17 9/F6	
	2	18	
	3	19	
	4	20	
	5	21	
	6	22	
	7 10/D5	23	
	8 10/E5	24	
	9	25	
	10 10/E6	26	
	11 19/C6	27	
	12 20/E3	28	
	13 8/C7	29	
	14 8/D7	30	
	15		

TABLE-6: EARTHING CABLE SIZE DETAILS

Cross-Sectional Area of Phase Conductors Supplying The Equipment S (sq.mm)	Minimum Cross Sectional Area of The External Protective Conductor (sq.mm)
S <= 16	S
16 < S <= 35	16
S > 35	S/2

NOTE:
1.ALL SOLENOIDS TO BE GROUNDED.
2.REFER TABLE-6 FOR EARTHING CABLE SIZE DETAILS.

DRAWN	SM	REVISION-1		CUSTOMER :	TITLE : 24V DISTRIBUTION AND EARTHING CABLE DETAILS	DRAWING NO.
DESIGNED	MGN	REVISION-2				14-402/33-4-6
APPROVED	PVR	REVISION-3		MACHINE MODEL : SUPER JOBBER ELITE	PLOT FRAME ACE STD_008_A3	PAGE NO. 24

ACE DESIGNERS

IO_MODULE

CB104 (HIROSE 50 PIN)

PIN	ADDRESS	DESCRIPTION	CROSS-REF	PIN	ADDRESS	DESCRIPTION	CROSS-REF
A1	0VC			B1	24VC		
A2	X0000.0	CHUCK CLAMP/DECLAMP FOOT SW.	18/E6	B2	X0000.1	CHUCK OPEN PRESSURE SW.	18/F6
A3	X0000.2	CHUCK CLOSE PRESSURE SW.	18/G6	B3	X0000.3	T.S. QUILL FWD/RET FOOT SW.	18/G6
A4	X0000.4	T.S. QUILL FWD LED	17/D6 18/H6	B4	X0000.5	T.S. QUILL HOME LED	17/E6 18/I6
A5	X0000.6	LUBRICATION FLOAT SW.	12/E6	B5	X0000.7	LUBRICATION PRESSURE SW.	12/F6
A6	X0001.0			B6	X0001.1	TURRET CLAMP LED	17/G6 19/H6
A7	X0001.2	TURRET MOTOR THERMAL CONTACT	19/E6	B7	X0001.3	X-CLUTCH PRX.SW.	14/C6
A8	X0001.4	Z-CLUTCH PRX.SW.	14/C6	B8	X0001.5	PSM READY	14/D6
A9	X0001.6	CHUCK IN PROXIMITY SW.	18/I6	B9	X0001.7	CHUCK OUT PROXIMITY SW.	18/J6
A10	X0002.0	TURRET F/B-1	17/E6 19/F6	B10	X0002.1	TURRET F/B-2	17/E6 19/F6
A11	X0002.2	TURRET F/B-4	17/F6 19/F6	B11	X0002.3	TURRET F/B-8	17/F6 19/F6
A12	X0002.4	STROBE	19/G6	B12	X0002.5	PARITY	19/G6
A13	X0002.6			B13	X0002.7		
A14				B14			
A15				B15			
A16	Y0000.0			B16	Y0000.1		
A17	Y0000.2	T.S. QUILL FWD. SOLENOID	18/C1	B17	Y0000.3	T.S. QUIL RET. SOLENOID	18/D1
A18	Y0000.4	BRAKE OUTPUT	11/H2	B18	Y0000.5	TOWER LAMP AMBER	13/H2
A19	Y0000.6	TOWER LAMP RED	13/H2	B19	Y0000.7	TOWER LAMP GREEN	13/H2
A20	Y0001.0	+X OFFSET WRITE OUTPUT	23/G2	B20	Y0001.1	-X OFFSET WRITE OUTPUT	23/H2
A21	Y0001.2	+Z OFFSET WRITE OUTPUT	23/I2	B21	Y0001.3	-Z OFFSET WRITE OUTPUT	23/I2
A22	Y0001.4	TOUCH PROBE OUTPUT	23/J2	B22	Y0001.5		
A23	Y0001.6			B23	Y0001.7		
A24		DOCOM 24VP		B24		DOCOM 24VP	
A25		DOCOM 24VP		B25		DOCOM 24VP	

CB105 (HIROSE 50 PIN)

PIN	ADDRESS	DESCRIPTION	CROSS-REF	PIN	ADDRESS	DESCRIPTION	CROSS-REF
A1	0VC			B1	24VC		
A2	X0003.0	MACHINE RESET PB	17/G6	B2	X0003.1	TURRET INDEX ON PB	17/G6
A3	X0003.2	COOLANT ON/OFF PB.	17/H6	B3	X0003.3	CYCLE START PB-1	14/E6
A4	X0003.4	CHIP CONV. FWD. PB.	17/H6	B4	X0003.5	CHIP CONV. REV. PB.	17/I6
A5	X0003.6	LUB INCH PB	17/I6	B5	X0003.7	DOOR OPEN/CLOSE PB	17/J6
A6	X0008.0	CYCLE START PB-2	14/F6	B6	X0008.1		
A7	X0008.2			B7	X0008.3		
A8	X0008.4	*ESP	12/G6	B8	X0008.5		
A9	X0008.6	DOOR OPEN REED SW.	21/F6	B9	X0008.7	DOOR CLOSE REED SW.	21/G6 14/G6
A10	X0009.0			B10	X0009.1		
A11	X0009.2			B11	X0009.3		
A12	X0009.4	T.P. ARM HOME LIMIT SW.	23/F6	B12	X0009.5	T.P.ARM FWD. LIMIT SW.	23/F6
A13	X0009.6	PARTS CATCHER FWD. PROX SW.	22/G6	B13	X0009.7	PARTS CATCHER RET. PROX SW.	22/G6
A14				B14			
A15				B15			
A16	Y0002.0	HYDRAULIC ON	12/B2	B16	Y0002.1	LUBE ON	12/C2 17/C1
A17	Y0002.2	COOLANT ON	12/D2	B17	Y0002.3	TURRET FWD	19/I2
A18	Y0002.4	TURRET REV	19/J2	B18	Y0002.5	PSM ON	13/B2
A19	Y0002.6	CHIP CONVEYOR FWD LED	16/I1	B19	Y0002.7	CHIP CONVEYOR REV LED	16/J1
A20	Y0003.0	X-REF LED	17/A1	B20	Y0003.1	Z-REF LED	17/A1
A21	Y0003.2	LUB FAULT LED	17/C1	B21	Y0003.3	CHUCK CLAMP LED	17/B1
A22	Y0003.4	CHUCK DECLAMP LED	17/B1	B22	Y0003.5		
A23	Y0003.6			B23	Y0003.7		
A24		DOCOM 24VP		B24		DOCOM 24VP	
A25		DOCOM 24VP		B25		DOCOM 24VP	

CB106 (HIROSE 50 PIN)

PIN	ADDRESS	DESCRIPTION	CROSS-REF	PIN	ADDRESS	DESCRIPTION	CROSS-REF
A1	0VC			B1	24VC		
A2	X0004.0	T.P. SENSING SIGNAL ON (XAE)	23/B6	B2	X0004.1	T.P. SENSING SIGNAL ON (ZAE)	23/B6
A3	X0004.2	+X OFFSET WRITE SIGNAL	23/C6	B3	X0004.3	-X OFFSET WRITE SIGNAL	23/D6
A4	X0004.4	+Z OFFSET WRITE SIGNAL	23/D6	B4	X0004.5	-Z OFFSET WRITE SIGNAL	23/E6
A5	X0004.6	TOUCH PROBE SIGNAL ON	23/E6	B5	X0004.7		
A6	X0005.0	CYCLE START PB	15/B6	B6	X0005.1	FEED HOLD PB	15/B6
A7	X0005.2	SPINDLE CW PB	15/C6	B7	X0005.3	SPINDLE STOP PB	15/C6
A8	X0005.4	SPINDLE CCW PB	15/C6	B8	X0005.5	SPINDLE SPEED O/R (SPA)	15/D6
A9	X0005.6	SPINDLE SPEED O/R (SPB)	15/D6	B9	X0005.7	SPINDLE SPEED O/R (SPC)	15/E6
A10	X0006.0	MODE SLECT -MD1	15/E6	B10	X0006.1	MODE SLECT -MD2	15/E6
A11	X0006.2	MODE SLECT -MD4	15/F6	B11	X0006.3	LUBRICATION-2 INCH PB.	15/F6
A12	X0006.4	ADD. COOLANT ON/OFF PB.	15/G6	B12	X0006.5	RAPID TRAVERSE O/R -1	15/G6
A13	X0006.6	RAPID TRAVERSE O/R -2	15/G6	B13	X0006.7	PROGRAM EDIT KEY	15/H6
A14				B14		COM4	
A15				B15			
A16	Y0004.0			B16	Y0004.1		
A17	Y0004.2			B17	Y0004.3		
A18	Y0004.4	PARTS CATCHER FWD. SOLENIOD	22/B1	B18	Y0004.5	PARTS CATCHER HOME SOLENIOD	22/C1
A19	Y0004.6			B19	Y0004.7		
A20	Y0005.0			B20	Y0005.1		
A21	Y0005.2			B21	Y0005.3		
A22	Y0005.4			B22	Y0005.5	X-AXIS ADDITIONAL BRAKE	13/C2
A23	Y0005.6			B23	Y0005.7		
A24		DOCOM 24VP		B24		DOCOM 24VP	
A25		DOCOM 24VP		B25		DOCOM 24VP	

CB107 (HIROSE 50 PIN)

PIN	ADDRESS	DESCRIPTION	CROSS-REF	PIN	ADDRESS	DESCRIPTION	CROSS-REF
A1	0VC			B1	24VC		
A2	X0007.0	FEED O/R-1	15/I6	B2	X0007.1	FEED O/R-2	15/I6
A3	X0007.2	FEED O/R-4	15/I6	B3	X0007.3	FEED O/R-8	15/J6
A4	X0007.4	+X JOG PB	16/A6	B4	X0007.5	-X JOG PB	16/B6
A5	X0007.6	+Z JOG PB	16/B6	B5	X0007.7	-Z JOG PB	16/C6
A6	X0010.0	RAPID JOG PB	16/C6	B6	X0010.1	FREE	16/C6
A7	X0010.2	FREE	16/D6	B7	X0010.3	OPTIONAL STOP PB.	16/D6
A8	X0010.4	BLOCK DELETE PB.	16/E6	B8	X0010.5	DRY RUN PB.	16/E6
A9	X0010.6	PROGRAM TEST PB.	16/E6	B9	X0010.7	FREE	16/F6
A10	X0011.0	EMERGENCY PB	12/H6	B10	X0011.1	HYD.OIL FLOAT SW.	12/I6
A11	X0011.2	PNEUMATIC PR. SW.	21/H6	B11	X0011.3	PANEL COOLER ALARM SIGNAL	14/G6
A12	X0011.4			B12	X0011.5	HYD/COOL TH. O/L SIGNAL	12/I6
A13	X0011.6			B13	X0011.7		
A14				B14			
A15				B15			
A16	Y0006.0	CYCLE START LED	16/F1	B16	Y0006.1	FEED HOLD LED	16/G1
A17	Y0006.2	SPINDLE CW LED	16/G1	B17	Y0006.3	SPINDLE CCW LED	16/H1
A18	Y0006.4	LUBE-2 ON	16/H1	B18	Y0006.5	LUBE-2 FAULT	16/H1
A19	Y0006.6	FREE	16/I1	B19	Y0006.7	FREE	16/I1
A20	Y0007.0			B20	Y0007.1		
A21	Y0007.2			B21	Y0007.3		
A22	Y0007.4			B22	Y0007.5		
A23	Y0007.6			B23	Y0007.7		
A24		DOCOM 24VP		B24		DOCOM 24VP	
A25		DOCOM 24VP		B25		DOCOM 24VP	

DRAWN	SM	REVISION-1		CUSTOMER :		DRAWING NO.
DESIGNED	MGN	REVISION-2			TITLE : PMC SIGNAL CONNECTION DETAILS	11-404/20-4-6
APPROVED	PVR	REVISION-3		MACHINE MODEL : SUPER JOBBER ELITE	PLOT FRAME ACE STD_008_A3	PAGE NO. 25

ACE DESIGNERS

The cable W69 is used between
the PSM, SPM, and SVM.

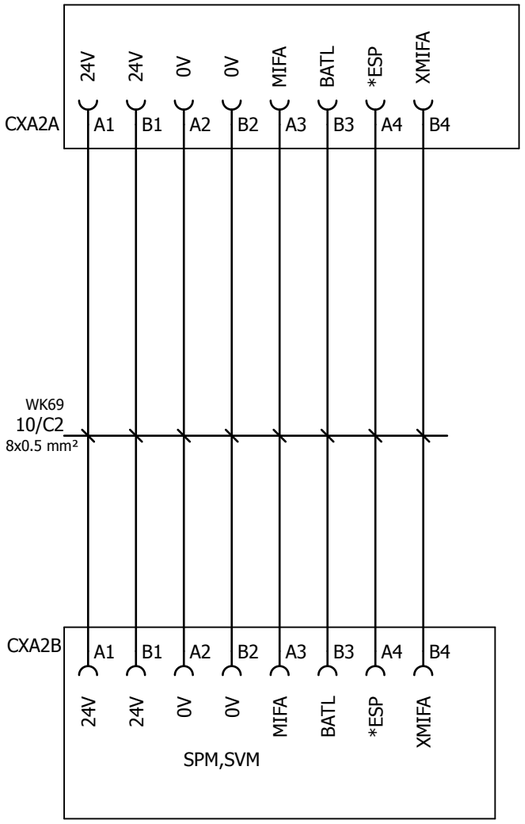

W21 cable is used between
the SVM and SERVO MOTOR
POWER connector

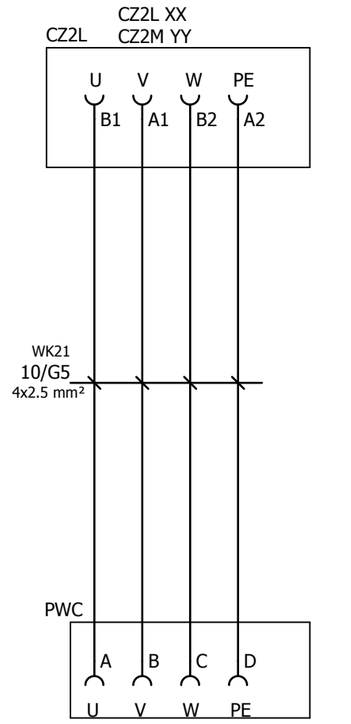

X AXIS MOTOR POWER CONNECTOR
Z AXIS MOTOR POWER CONNECTOR

W22 cable used between
the SVM and SERVO MOTOR
FEEDBACK connector

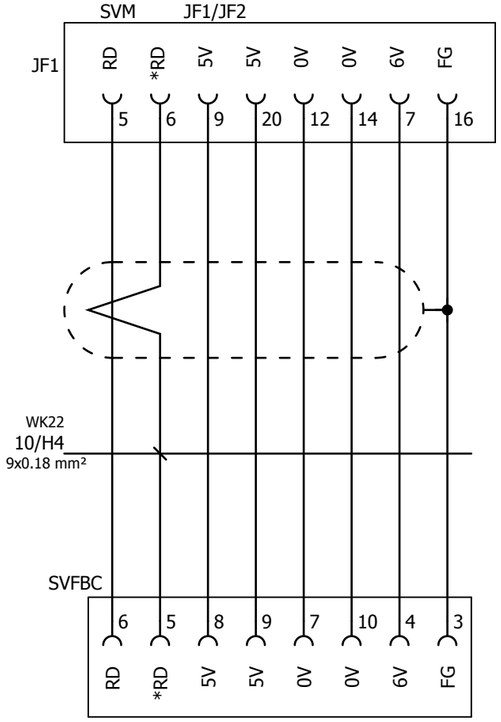

SERVO MOTOR FEEDBACK

BATTERY CONNECTION
SVM TO BATTERY

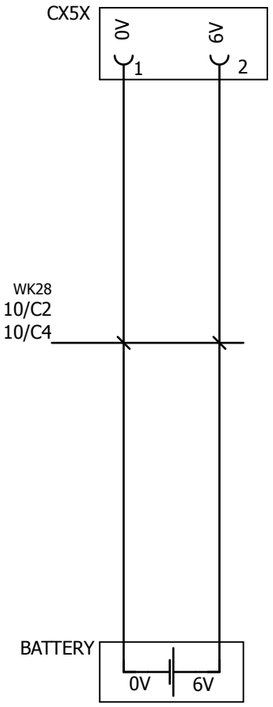

OPTICAL CABLE

CNC TO SVM

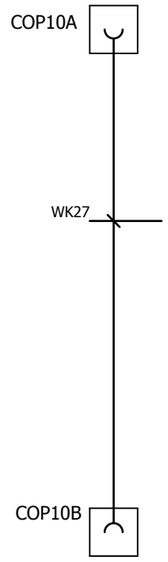

DRAWN	SM	REVISION-1		CUSTOMER :	TITLE : CABLE DETAILS-1	DRAWING NO.
DESIGNED	MGN	REVISION-2				11-404/21-4-6
APPROVED	PVR	REVISION-3		MACHINE MODEL : SUPER JOBBER ELITE	PLOT FRAME ACE STD_008_A3	PAGE NO. 26

ACE DESIGNERS

SPM to
CNC SYSTEM

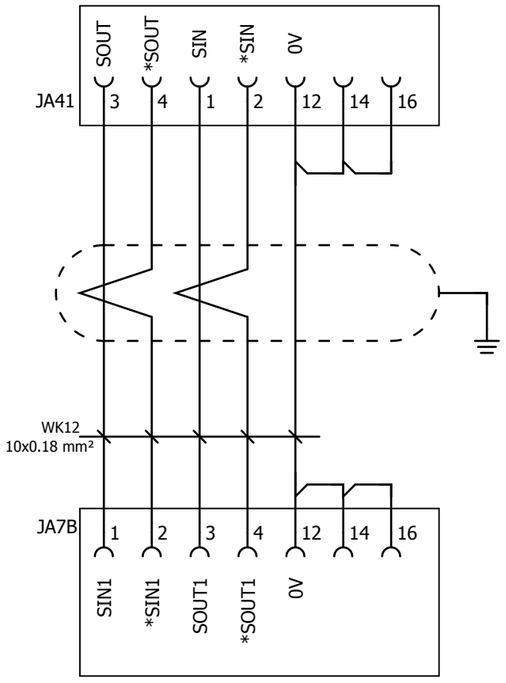

CNC SYSTEM

SPM to
SP_MOTOR

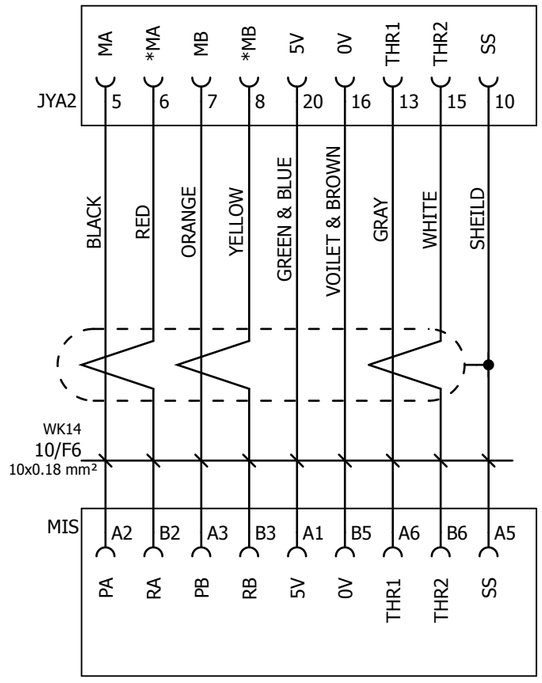

SP_MOTOR

SPM to
POSITION CODER

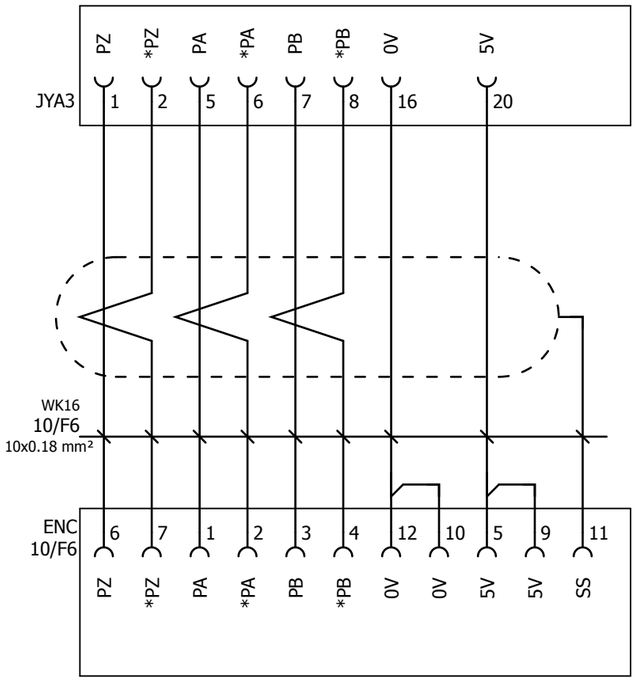

POSITION CODER

DRAWN	SM	REVISION-1		CUSTOMER :	DESIGNERS	TITLE : CABLE DETAILS-2	DRAWING NO.
DESIGNED	MGN	REVISION-2					14-402/10-4-6
APPROVED	PVR	REVISION-3		MACHINE MODEL : SUPER JOBBER ELITE		PLOT FRAME ACE STD_008_A3	PAGE NO. 27

CNC SYSTEM to IO_module

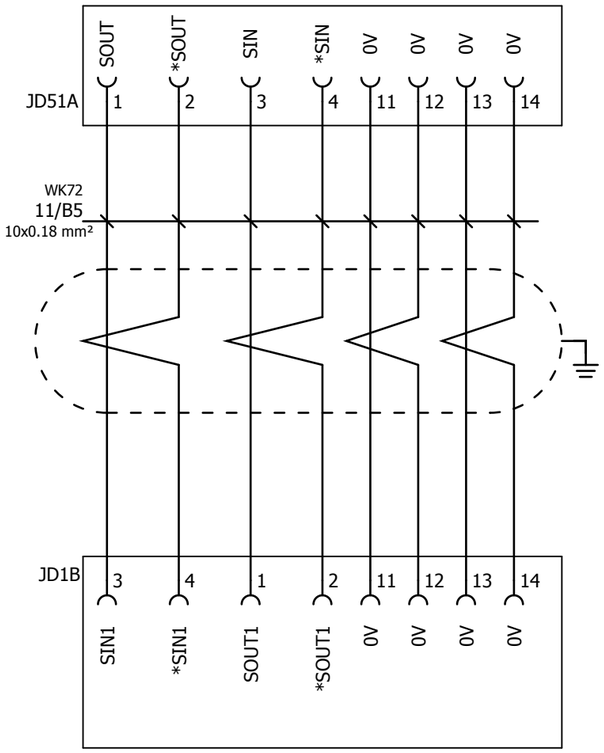

IO_module

IO_module to MPG

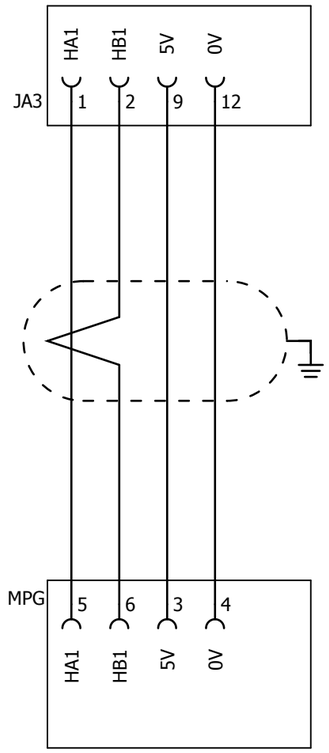

MPG

CNC System to RS-232C port

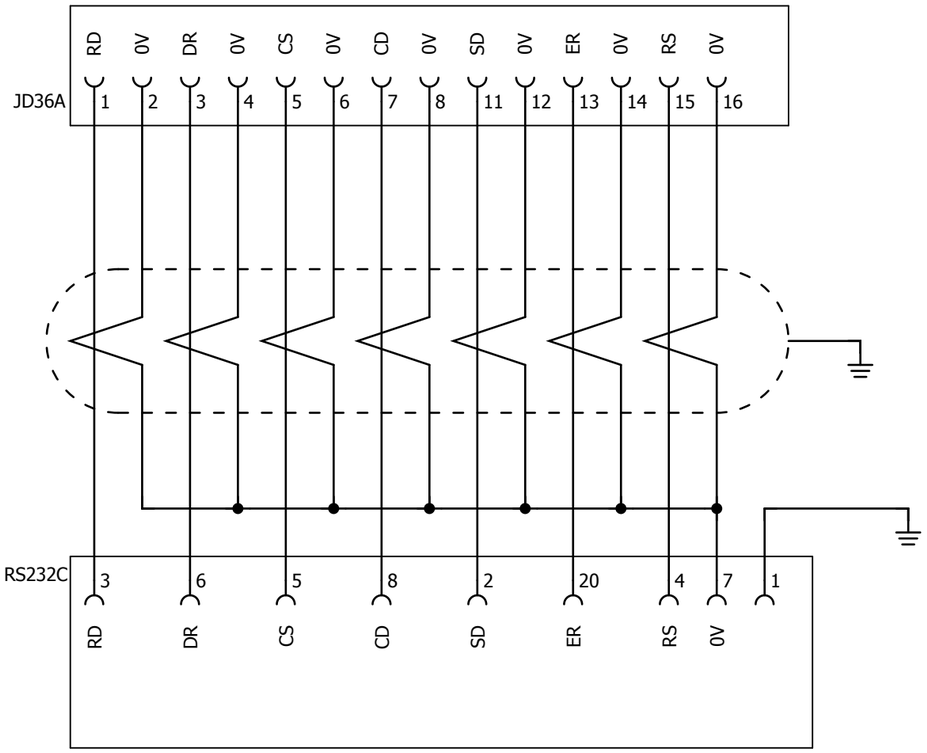

RS-232C port

DRAWN	SM	REVISION-1		CUSTOMER :	ACE DESIGNERS	TITLE : CABLE DETAILS-3	DRAWING NO.
DESIGNED	MGN	REVISION-2					11-404/23-4-6
APPROVED	PVR	REVISION-3		MACHINE MODEL : SUPER JOBBER ELITE		PLOT FRAME ACE STD_008_A3	PAGE NO. 28

IPC3 9PIN CONNECTOR

PIN	TB	SIGNAL
01	X1.106	Y0002.0
02	X1.107	Y0002.1
03	X1.108	Y0002.2
04	X1.109	Y0002.3
05	X1.110	Y0002.4
06	X1.111	Y0002.5
07	X1.112	Y0002.6
08	X1.113	Y0002.7
09	-----	-----

IPC4 9PIN CONNECTOR

PIN	TB	SIGNAL
01	-----	Y0004.0
02	-----	Y0004.1
03	-----	Y0004.2
04	-----	Y0004.3
05	-----	Y0004.4
06	-----	Y0004.5
07	-----	Y0004.6
08	-----	Y0004.7
09	-----	-----

IPC5 9PIN CONNECTOR

PIN	TB	SIGNAL
01	-----	Y0005.0
02	-----	Y0005.1
03	-----	Y0005.2
04	-----	Y0005.3
05	-----	Y0005.4
06	-----	Y0005.5
07	-----	Y0005.6
08	-----	Y0005.7
09	-----	-----

IPC6 9PIN TB CONNECTOR

TB	SIGNAL
01	X0002.0
02	X0002.1
03	X0002.2
04	X0002.3
05	X0002.4
06	X0002.5
07	X0001.1
08	24 VC
09	0VC

IPC7 22PIN TB CONNECTOR

PIN	SIGNAL
01	X0000.0
02	24 VC
03	X0000.1
04	24 VC
05	X0000.2
06	24 VC
07	X0000.3
08	24 VC
09	X0000.4
10	24 VC
11	X0000.5
12	24 VC
13	X0000.6
14	24 VC
15	X0000.7
16	24 VC
17	X0009.0
18	24 VC
19	X0009.1
20	24 VC
21	X0009.3
22	24 VC

IPC8 50PIN CONNECTOR

PIN	TB	SIGNAL
01	X1.36	X0001.0
02	X1.37	X0002.7
03	X1.38	X0001.2
04	X1.39	X0001.3
05	X1.40	X0001.4
06	X1.41	X0001.5
07	X1.42	X0001.6
08	X1.43	X0001.7
09	X1.44	X0003.3
10	X1.45	X0008.0
11	X1.46	X0008.4
12	X1.47	X0008.6
13	X1.48	X0008.7
14	X1.49	X0009.6
15	X1.50	X0009.7
16	X1.51	X00011.1
17	X1.65	X00011.2
18	X1.66	X00011.3
19	X1.67	X00011.4
20	X1.68	X00011.5
21	X1.69	X00011.6
22	X1.70	X00011.7
23	X1.53	Y0000.0
24	X1.54	Y0000.1
25	X1.55	Y0000.2
26	X1.56	Y0000.3
27	X1.57	Y0000.4
28	X1.58	Y0000.5
29	X1.59	Y0000.6
30	X1.60	Y0000.7
31	X1.71	Y0007.0
32	X1.72	Y0007.1
33	X1.73	Y0007.2
34	X1.74	Y0007.3
35	X1.75	Y0007.4
36	X1.76	Y0007.5
37	X1.77	Y0007.6
38	X1.78	Y0007.7
39	X1.52	ACSSR
40	X1.105	X0002.6
41	X1.1T	24VC
42	X1.1T	24VC
43	X1.1T	24VC
44	X1.12T	0VC
45	X1.12T	0VC
46	X1.104	X0009.2
47	X1.19	24VP
48	X1.19	24VP
49	X1.25	0VP
50	X1.25	0VP

IPC9 25PIN CONNECTOR

PIN	TB	SIGNAL
01	X1.79	X0004.0
02	X1.80	X0004.1
03	X1.81	X0004.2
04	X1.82	X0004.3
05	X1.83	X0004.4
06	X1.84	X0004.5
07	X1.85	X0004.6
08	X1.86	X0004.7
09	X1.87	X0008.1
10	X1.88	X0008.2
11	X1.89	X0008.3
12	X1.90	X0008.5
13	X1.91	X0009.4
14	X1.92	X0009.5
15	X1.93	Y0001.0
16	X1.94	Y0001.1
17	X1.95	Y0001.2
18	X1.96	Y0001.3
19	X1.97	Y0001.4
20	X1.98	Y0001.5
21	X1.99	Y0001.6
22	X1.100	Y0001.7
23	X1.101	Y0003.5
24	X1.102	Y0003.6
25	X1.103	Y0003.7

DRAWN	SM	REVISION-1		CUSTOMER :	TITLE : IPC3-IPC9 PIN CONNECTION DETAILS	DRAWING NO.
DESIGNED	MGN	REVISION-2				11-404/29-4-6
APPROVED	PVR	REVISION-3		MACHINE MODEL : SUPER JOBBER ELITE	PLOT FRAME ACE STD_008_A3	PAGE NO. 29

ACE DESIGNERS

TABLE-3 CABLE CROSS SECTION DETAILS

MODEL	TRANSFORMER PRIMARY	TRANSFORMER SECONDARY	SPINDLE
Colt/Cub	4 Sqmm.	6 Sqmm.	4 Core x 4 Sqmm.
Jobber-XL	4 Sqmm.	10 Sqmm.	4 Core x 10 Sqmm.
LT-2XL(A8)	6 Sqmm.	10 Sqmm.	4 Core x 10 Sqmm.
LT-2XL(A12)	10 Sqmm.	25 Sqmm.	16 Sqmm.
Super jobber	6 Sqmm.	10 Sqmm.	4 Core x 10 Sqmm.
Classic(Δ)	10 Sqmm.	25 Sqmm.	25 Sqmm. x Single Core
Classic(Y-Δ)	10 Sqmm.	25 Sqmm.	25 Sqmm. & 16 Sqmm.
Vantage-MCY	16 Sqmm.	25 Sqmm.	25 Sqmm.
LT-25	16 Sqmm.	25 Sqmm. - Heat resistant	25 Sqmm. - Heat resistant
VTL-30(Δ)	16 Sqmm.	25 Sqmm. - Heat resistant	25 Sqmm. - Heat resistant
VTL-30(Y-Δ)	16 Sqmm.	25 Sqmm. - Heat resistant	25 Sqmm. - Heat resistant ,25 Sqmm. (Y-Δ)
VTL-40(Y-Δ)	25 Sqmm.	35 Sqmm. - Heat resistant	25 Sqmm. - Heat resistant ,25 Sqmm. (Y-Δ)
VTL-40(Δ)	25 Sqmm.	35 Sqmm. - Heat resistant	25 Sqmm. - Heat resistant

MCP TB NUMBERS

INPUT/OUTPUT/FUNCTION	TB NUMBER
X0006.3	TB1-1
X0006.4	TB1-2
X0010.1	TB1-3
X0010.2	TB1-4
X0010.7	TB1-5
X0003.3	TB1-6
Spare-1 PB	TB1-7
Spare-2 PB	TB1-8
Chuck high/low PB	TB1-9
Lub-2 inch PB	TB1-10
Coolant-2 on/off PB	TB1-11
Machine lamp	TB1-19
Y0006.4	TB2-1
Y0006.5	TB2-2
Y0006.6	TB2-3
Y0006.7	TB2-4
Spare Sw-1 LED	TB2-5
Spare Sw-2 LED	TB2-6
Lub-2 inch on LED	TB2-7
Lub-2 inch fault LED	TB2-8
T.S body unclamp LED	TB2-14
Chuck high LED	TB2-15
Chuck low LED	TB2-16
T.S body fwd LED	TB2-17
T.S body home LED	TB2-18
Spare-6 Green LED	TB2-19
Spare-6 Red LED	TB2-20
Spare-7 Green LED	TB2-21
Spare-7 Red LED	TB2-22
Spare-8 Green LED	TB2-23
Spare-8 Red LED	TB2-24
Spare-9 Green LED	TB2-25
Spare-9 Red LED	TB2-26
Lamp Test	TB2-27

TABLE-5 FOR Q3 SETTING

M/C MODEL	TURRET TYPE	MOTOR	MPCB	SETTING
LT-25/LT-30	BTP125	TM125	1.0-1.6 A	1.4A
VTL-30/VTL-40	BTP125	TM125	0.63-1.0 A	0.8A
CLASSIC/VANTAGE	BTP100	TM100	1.0-1.6 A	1.2A
XL SERIES	BTP80	TM80	0.63-1.0 A	1.0A
CUB	BTP63	TM63	0.4-0.63 A	0.6A
SIMPLE TURN	SQTP180	SQTP180	0.4-0.63 A	0.6A

DRAWN	SM	REVISION-1		CUSTOMER :	TITLE : TABLE-3 Cable details AND TABLE-5 details	DRAWING NO.
DESIGNED	MGN	REVISION-2				14-402/40-4-6
APPROVED	PVR	REVISION-3		MACHINE MODEL : SUPER JOBBER ELITE	PLOT FRAME ACE STD_008_A3	PAGE NO. 30

ACE DESIGNERS

MACHINE CONTROL PANEL LAYOUT

EMERGENCY STOP

MACHINE RESET

MACHINE SETUP

CYCLE STOP

CYCLE START

TOOL STATION

SPINDLE LOAD %

CHUCK CLAMP
CHUCK DECLAMP
POWER ON
T.S.QUILL HOME
T.S.QUILL FWD
SPARE-6
T.S.BODY HOME
T.S.BODY FWD
SPARE-7
CHUCK LOW
CHUCK HIGH
SPARE-8
TURRET CLAMP
T.S.BODY UNCLAMP
SPARE-9

PROGRAM EDIT

MODE SELECTOR
MDI
AUTO
X
MPG/STEP
Z
SBK
JOG
EDIT
ZRN

FEED OVERRIDE%
0
50
100
150
%

RAPID OVR % / MPG - STEP FEED
0
.001
.01
.1
25
50
100
1.0
% /

SPINDLE SPEED OVERRIDE %
50
60
70
80
90
100
110
120
%

CNC

X Z

JOG
X
Z
RAPID
Z
X

SPINDLE CONTROL
SPNDL CW
SPNDL STOP
SPNDL CCW

AUXILIARY FUNCTIONS
CONVR FWD
CONVR REV
DOOR OPN/CL
CLNT-1 ON/OFF
LUB-1 INCH
TURRET INDEX
CLNT-2 ON/OFF
LUB-2 INCH
CHUCK HIGH / LOW

OPTIONAL STOP
BLOCK DELETE
DRY RUN
PROGRAM TEST
M/C LAMP
LAMP TEST
Fn-1
Fn-2

DRAWN	SM	REVISION-1		CUSTOMER :	TITLE : MACHINE CONTROL PANEL LAYOUT	DRAWING NO.
DESIGNED	MGN	REVISION-2				14-402/11-4-6
APPROVED	PVR	REVISION-3		MACHINE MODEL : SUPER JOBBER ELITE	PLOT FRAME ACE STD_008_A3	PAGE NO. 31

ACE DESIGNERS

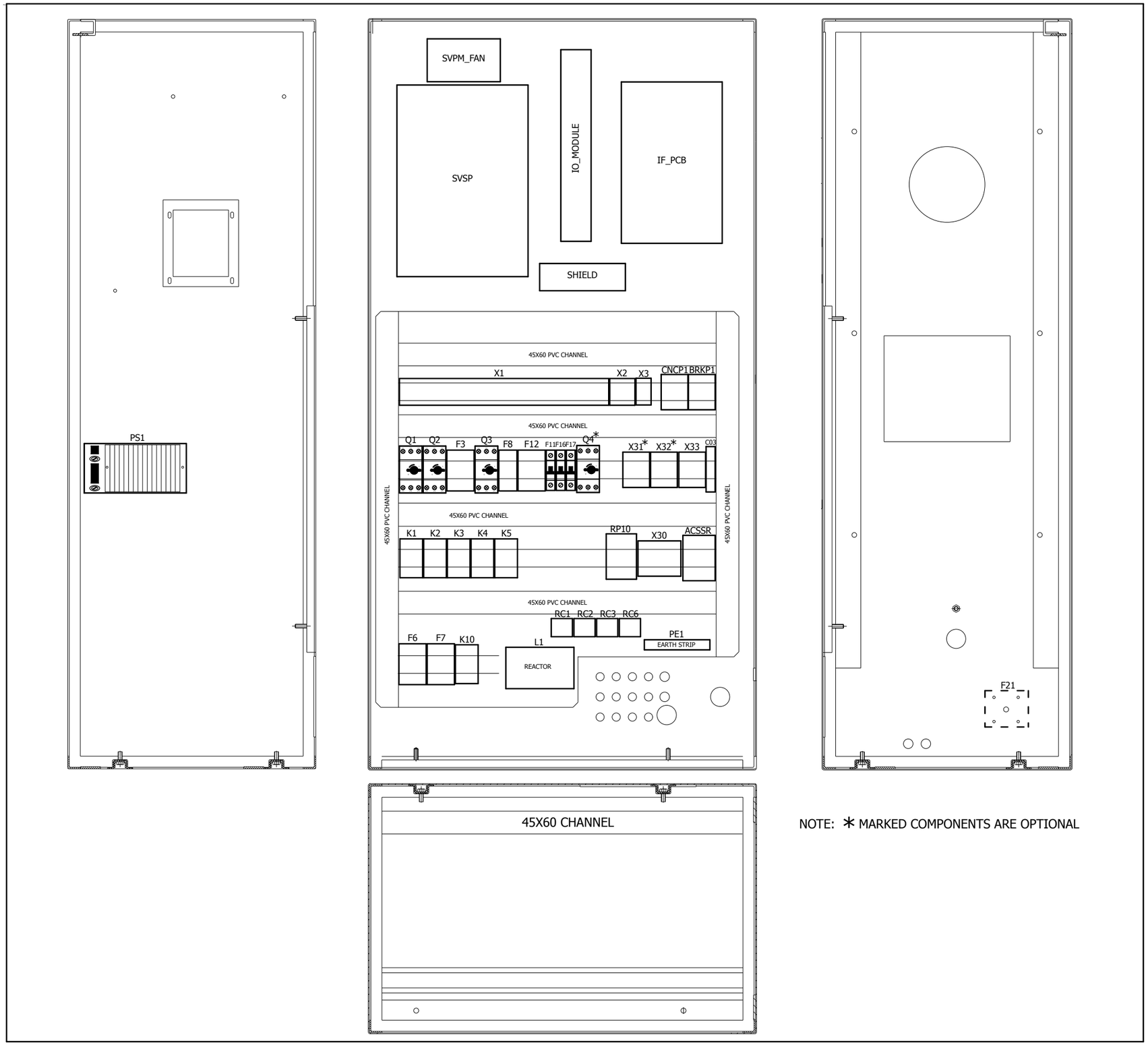

NOTE: * MARKED COMPONENTS ARE OPTIONAL

DRAWN	SM	REVISION-1		CUSTOMER :	TITLE : ELECTRICAL CABINET LAYOUT	DRAWING NO.
DESIGNED	MGN	REVISION-2				14-402/15-4-6
APPROVED	PVR	REVISION-3		MACHINE MODEL : SUPER JOBBER ELITE	PLOT FRAME ACE STD_008_A3	PAGE NO. 32

ACE DESIGNERS

Enclosure legend

Enclosure legend Ace STD -A004

DEVICE TAG	DESCRIPTION	RATING	ERP NUMBER
IO_MODULE	IO MODULE	24V	ESYFANIO05
IF_PCB	INTERFACE PCB		EVASY050
SVPM_FAN			ESYFANFA06
SHIELD	SHIELDING BUS BAR		96104P0600
X1			
X2			
CNCP1	CNC ON/OFF RELAY PCB	24V	EACPRIC013
BRKP1	BRAKE RELAY PCB	24V	EACPRIC010
Q1	HYDRAULIC MPCB	*TABLE-1	ECSCIRB109
Q2	COOLANT MPCB	1,0-1,6 A	ECSCIRB108
F3	LUBRICATION MCB	2A	ECSCIRB013
Q3	TURRET MPCB	*TABLE-5	ECSCIRB107
F8	PS INPUT	6A	ECSCIRB011
F12	SPINDLE BLOWER	4A	ECSCIRB015
F11	AC INPUT	10 A	ECSCIRB006
F16	MAIN POWER ON	1A	ECSCIRB059
F17	DRAIN LINE COOLER	1A	ECSCIRB059
PS1	POWER SUPPLY	24V 10A	EACPOWS010
K1	HYDRAULIC CONTACTOR	24V	ECOCONC004
K2	COOLANT CONTACTOR	24V	ECOCONC004
K3	LUBRICATION CONTACTOR	24V	ECOCONC004
K4	TURRET FWD CONTACTOR	24V	ECOCONC004
K5	TURRET REV CONTACTOR	24V	ECOCONC004
Q4	CHIP CONVEYOR MPCB	*TABLE-4	ECSCIRB107
ACSSR	ACSSR	440VAC,24VDC,9A	ERESOLS006
X30	CHUCK AND T.S QUILL PCB	4SSR PCB	EACPRIC018
F7	TRANSFORMER SECONDARY MCB	40A	ECSCIRB023

L1	REACTOR	240V,46A	ESYFANAC09
PE1	EARTH BUS BAR		8801P0720
RC1	HYD SNUBBER	3.3/022-575 VAC	EACSNU1001
RC2	COOL SNUBBER	3.3/022-575 VAC	EACSNU1001
RC3	LUBE SNUBBER	3.3/022-575 VAC	EACSNU1001
RC6	TURRET SNUBBER	3.3/022-575 VAC	EACSNU1001
X33	PSM ON PCB	2SSR PCB	EACPRIC019
X32	PARTS CATCHER PCB	2SSR PCB	EACPRIC019
X31	AUTO DOOR PCB	2SSR PCB	EACPRIC019
C03	M/C LAMP RELAY	24VDC,10A	ERERELS1002
SVSP			ESYFANSE46
K10	PSM ON CONTACTOR	24V	ECOCONC070
X3			
RP10	TURRET & PANEL COOLER RELAY PCB	2RELAY PCB, 230V	EACPRIC038
F6	TRANSFORMER PRIMARY MCB	40A	ECSCIRB023
F21	MAINS DISCONNECTOR	40A	ECSROTS016

DRAWN	SM	REVISION-1		CUSTOMER :	DESIGNERS	TITLE : Enclosure legend : =+-IO_MODULE - =+-F21
DESIGNED	MGN	REVISION-2				DRAWING NO.
APPROVED	PVR	REVISION-3		MACHINE MODEL : SUPER JOBBER ELITE		PLOT FRAME ACE STD_008_A3 / PAGE NO. 33

SVPM

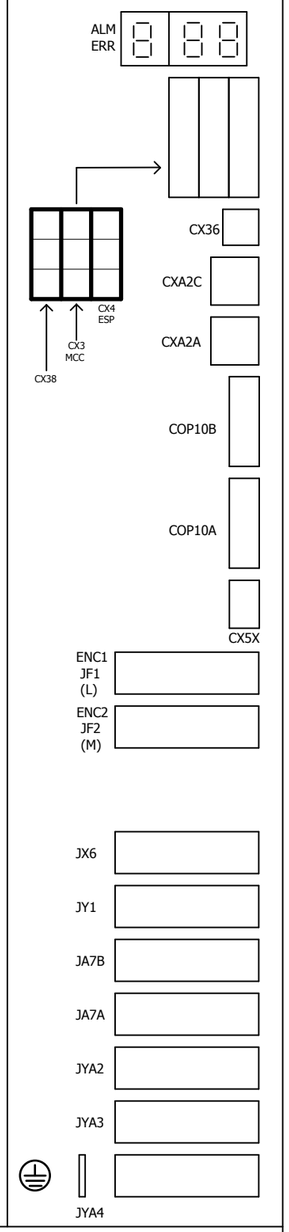

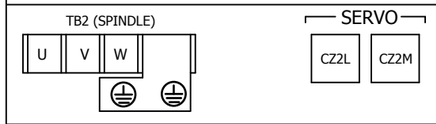

I/O MODULE

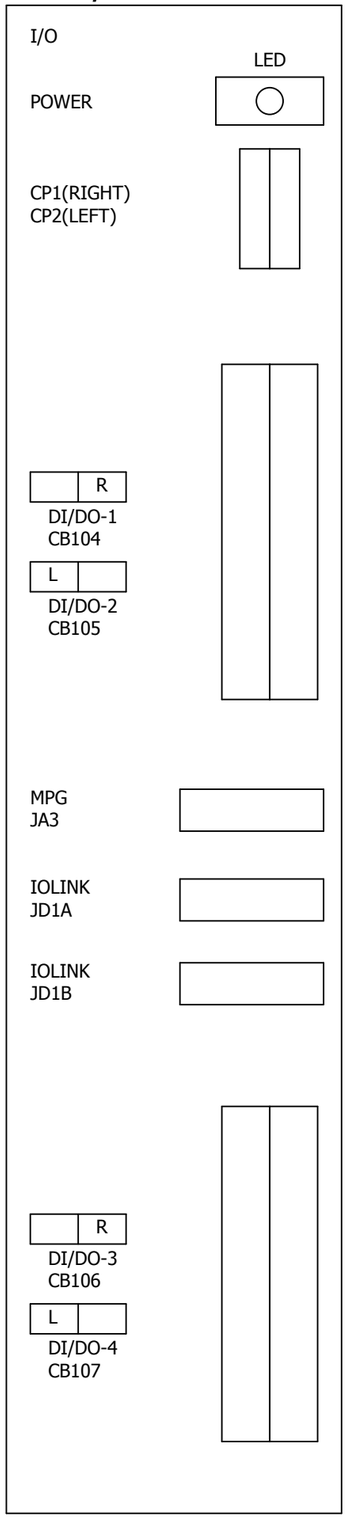

INTERFACE PCB LAYOUT

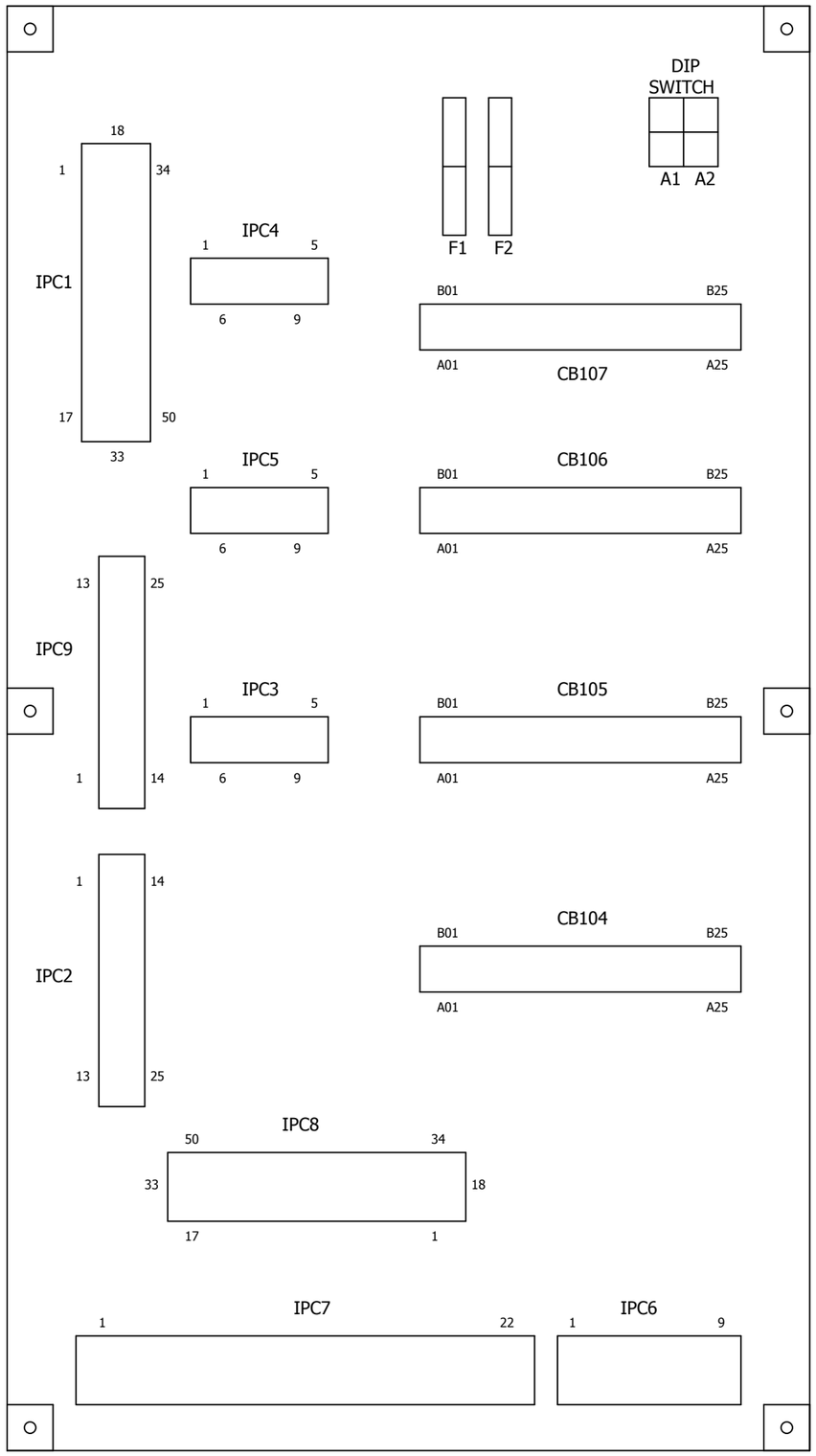

DRAWN	SM	REVISION-1		CUSTOMER :	DESIGNERS	TITLE : DRIVE,I/O MODULE AND INTERFACE PCB LAYOUT	DRAWING NO.
DESIGNED	MGN	REVISION-2					11-404/38-4-6
APPROVED	PVR	REVISION-3		MACHINE MODEL : SUPER JOBBER ELITE		PLOT FRAME ACE STD_008_A3	PAGE NO. 34

CNC REAR VIEW

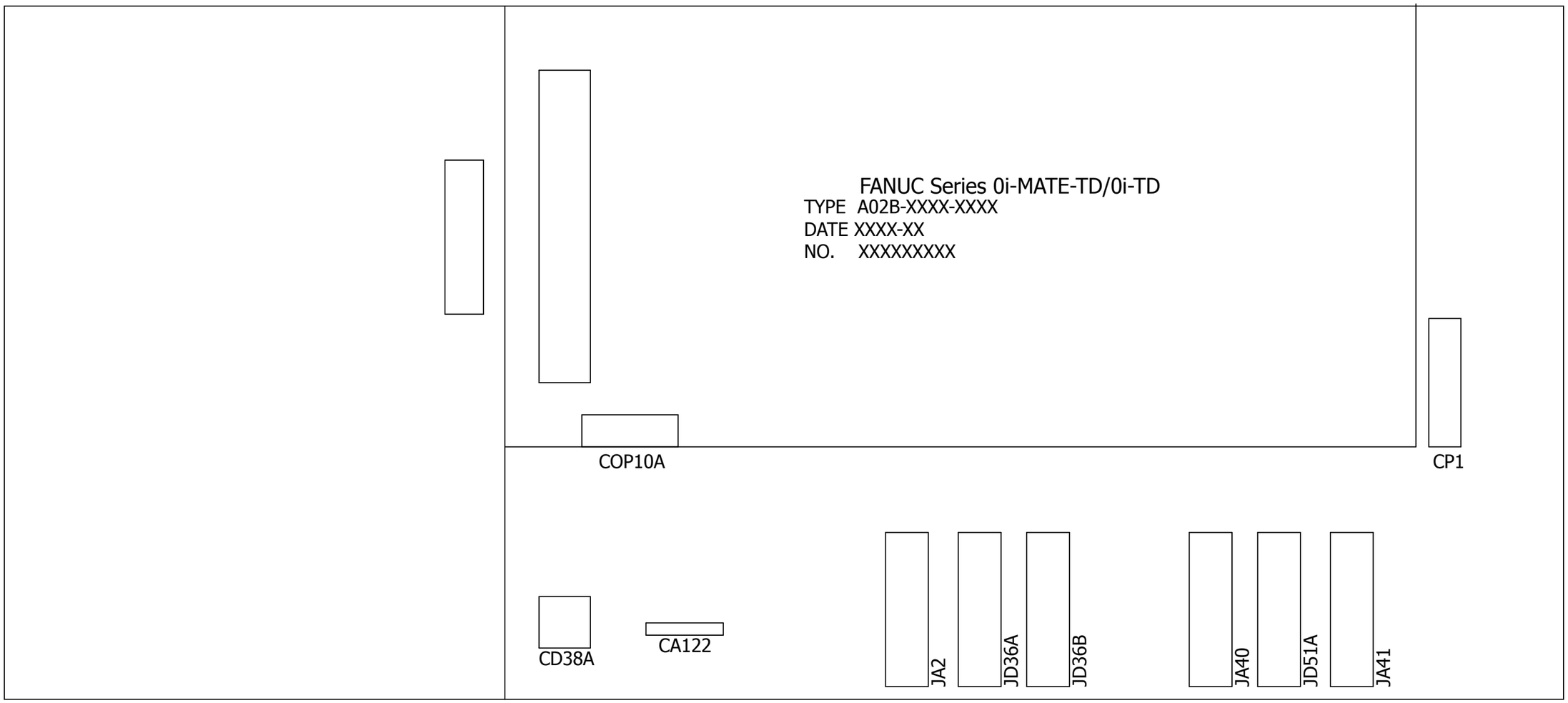

DRAWN	SM	REVISION-1		CUSTOMER :	DESIGNERS	TITLE : CNC LAYOUT	DRAWING NO.
DESIGNED	MGN	REVISION-2					11-404/39-4-6
APPROVED	PVR	REVISION-3		MACHINE MODEL : SUPER JOBBER ELITE		PLOT FRAME ACE STD_008_A3	PAGE NO. 35

Summarized parts list

Summerized parts list ACE STD-006

ERP number Material ID	Quantity	Designation	Technincal ratings	Type number	Order number	Manufacture
ERESOLS006	1	AC SOLID STATE RELAY	440VAC,24VDC,9A	ACSSC-2P-4	ACSSC-2P-4	YSL
EACPRIC010	1	BRAKE CIRCUIT RELAY	24V	1RDU-WRC-WT-1	1RDU-WRC-WT-1	YSL
ERELREL1002	1	24V RELAY WITH DIODE	24VDC,10A	YSL-UMK-1RM-24VDC-U-1NO	YSL-UMK-1RM-24VDC-U-1NO-1 RELAY MODULE	OMRON
ESYFANB018	1	BASIC UNIT 0ITD 2 AXIS	24V	A02B-0319-B500	A02B-0319-B500	FANUC
EACPRIC013	1	2RELAY BOARD ASSY CNC ON/OFF	24V	RP-002-TC-CP-1	RP-002-TC-CP-1	YSL
EFUGLAF013	2	0.5AMP GLASS FUSE(FSF-500mA SHURTER)	0.5A			PROTECTRON
ECSCIRB013	1	NBKRA103PC02A MCB 2A-TP	2A	NBKRA103PC02A		SCHNEIDER
ECSCIRB023	2	MCB 40A-TP (C-CURVE)- 3C40	40A	PTRA103PC40	PTRA103PC40	SCHNEIDER
ECSCIRB011	1	NBKRA102PC06A MCB 6A-DP	6A	NBKRA102PC06A		SCHNEIDER
ECSCIRB006	1	NBKRA101PC10A MCB 10A-SP	10 A	NBKRA101PC10A		SCHNEIDER
ECSCIRB015	1	MCB C60 UL1077 3 POLES - 4 A - C	4A	PTRA103PC04	PTRA103PC04	SCHNEIDER
ECSCIRB059	2	Miniature circuit-breaker	1A	PTRA101PC01	PTRA101PC01	SCHNEIDER
ECSROTS016	1	LB240-31409-B13 ROTARY SWITCH (40A,415V	40A	LB240-31409-B13		SALZER
EVASY050	1	INTERFACE PCB ASSEMBLY (YSL-ACE-IF-PCB-O		YSL-ACE-IF-PCB	YSL-ACE-IF-PCB	YSL
ESYFANIO05	1	I/O UNIT FOR OI (A02B-0309-C001)	24V	A02B-0309-C001	A02B-0309-C001	FANUC
ECOCONC004	7	contactor TeSys LC1-D - 3P - AC-3 440V 9 A	24V	LC1D093BL	LC1D093BL	SCHNEIDER
ECOADDB009	1	LAD-N20 ADD-ON BLOCK	24V	LAD-N20	LAD-N20	SCHNEIDER
ECOCONC070	1	CONTACTOR 24VDC	24V	LC1D38 BD	LC1D38 BD	SCHNEIDER
ESYFANAC09	1	AC REACTOR PSM-11I (A81L-0001-0155)	240V,46A	A81L-0001-0155	A81L-0001-0155	FANUC
EACMCP1001	1	MACHINE CONTROL PANEL	24V	3-REV0-06/11	3-REV0-06/11	YSL
8801P0720	1	EARTH BUS BAR		8801P0720		
EACPOWS010	1	ABL1RPM-24100 REG.POW.SUPPLY 24VDC, 10	24V 10A	ABL1RPM-24100	ABL1RPM-24100	SCHNEIDER
ECSCONB010	7	Auxiliary switch	1,0-1,6 A;*TABLE-1;*TABLE-4	NHI11-PKZ0	072896	MOE
ECSCIRB109	1	Motor overload switch	*TABLE-1	PKZM0-1,2.5	MPCB PKZM01-2.5	MOE
ECSCIRB108	1	Motor overload switch	1,0-1,6 A	PKZM01-1.6	PKZM01-1.6 (1-1.6A)	MOE
ECSCIRB107	2	Motor overload switch	*TABLE-4;*TABLE-5	PKZM01-1	PKZM01-1 (0.63-1.0A)	MOE
EACSNU1001	5	SNUBBER	3.3/022-575 VAC	YSL-NIR-RC-3-3/022-575-BU	ACSSC-2P-4	YSL
EACPRIC038	1	2RELAY PCB	2RELAY PCB, 230V	YSL-RM-02-4-11-0-2-0-P1	YSL-RM-02-4-11-0-2-0-P1	YSL

DRAWN	SM	REVISION-1		CUSTOMER :	TITLE : Summarized parts list : ERESOLS006 - EACPRIC038	DRAWING NO.
DESIGNED	MGN	REVISION-2				
APPROVED	PVR	REVISION-3		MACHINE MODEL : SUPER JOBBER ELITE	PLOT FRAME ACE STD_008_A3	PAGE NO. 36

ACE DESIGNERS

Summarized parts list

Summerized parts list ACE STD-006

ERP number Material ID	Quantity	Designation	Technincal ratings	Type number	Order number	Manufacture
ECSFOOS001	2	FOOT SWITCH	24V	PDA12G / FSGX-1 (1NO+1NC)	PDA12G / FSGX-1 (1NO+1NC)	PNEUMATIC CONTROLS
EACPRAS001	6	PROXIMITY SWITCH EGL-12X02AP-24-5000L M	24V	EGL-12X02AP-24-5000L	EGL-12X02AP-24-5000L	TEKNIC
ELSOILT002	2	LIMIT SWITCH	24V	NG1RS-510 L024	NG1RS-510 L024	TEKNIC
96104P0600	1	SHIELDING BUS BAR		96104P0600		
ESYFANFA06	1	FAN UNIT (A06B-6134-K001)		A06B-6134-K001	A06B-6134-K001	FANUC
ESYFANSE42	1	(A06B-6165-H202 #560) BISVSP 20/20-11	200V	A06B-6165-H202 #560	A06B-6165-H202 #560	FANUC
ESYFANSE46	1	SVPM2-11i SENSOR(A06B-6164-H202#H580)		A06B-6164-H202#H580	A06B-6164-H202#H580	FANUC
EACMACP014	1	TOWER LAMP- 3 REFLECTORS, LED TYPE WITH	24V	TOWER LAMP- 3 REFLECTORS,		PATLITE
EWCCABA001	4	50 WAY RIBBON CABLE ASMBLY (CONF DR3)				
EVASY0107	1	JA41-JA7B CABLE ASSEMBLY				
EVASY045	1	SPINDLE MOTOR FEEDBACK CABLE (JYA2)				
EVASY026	1	JYA3 - SPINDLE ENCODER FEEDBACK CABLE				
EVASY031	2	SERVO MOTOR POWER CABLE				
EVASY0149	2	ALPHA-i MOTOR FEEDBACK CABLE		A66L-0001-0479	A66L-0001-0479	FANUC
EVASY0106	1	JD1B-JD51A CABLE ASSEMBLY				
EWCPVCC002	1	TURRET FEEDBACK CABLE				
EWCPVCC019	1	TURRET POWER CABLE				
EACTERS018	92	2-CONDUCTOR THROUGH TERMINAL BLOCK		280-901	280-901	WAGO
EACPRIC018	1	4SSR PCB	4SSR PCB	YSL-SSRP-004-CN-5	YSL-SSRP-004-CN-5	YSL
EACPRIC019	3	2SSR PCB	2SSR PCB	YSL-SSRP-002-CN-5	YSL-SSRP-002-CN-5	YSL
EACPVCS001	2	TOWER LAMP TB				

DRAWN	SM	REVISION-1		CUSTOMER :	TITLE : Summarized parts list : ECSFOOS001 - EACPVCS001	DRAWING NO.
DESIGNED	MGN	REVISION-2				
APPROVED	PVR	REVISION-3		MACHINE MODEL : SUPER JOBBER ELITE	PLOT FRAME ACE STD_008_A3	PAGE NO. 37

ACE DESIGNERS