Schématique

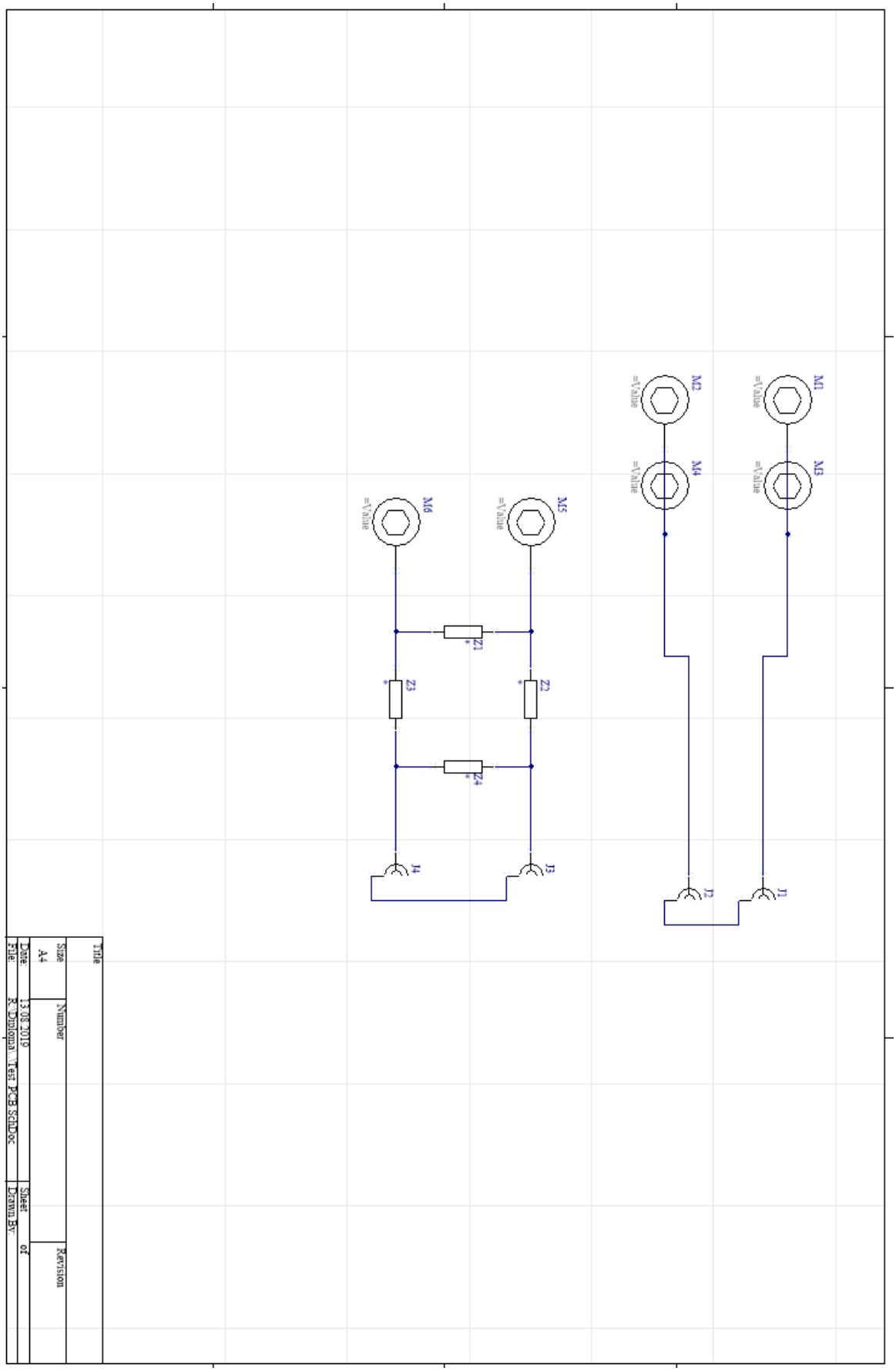

PCBS

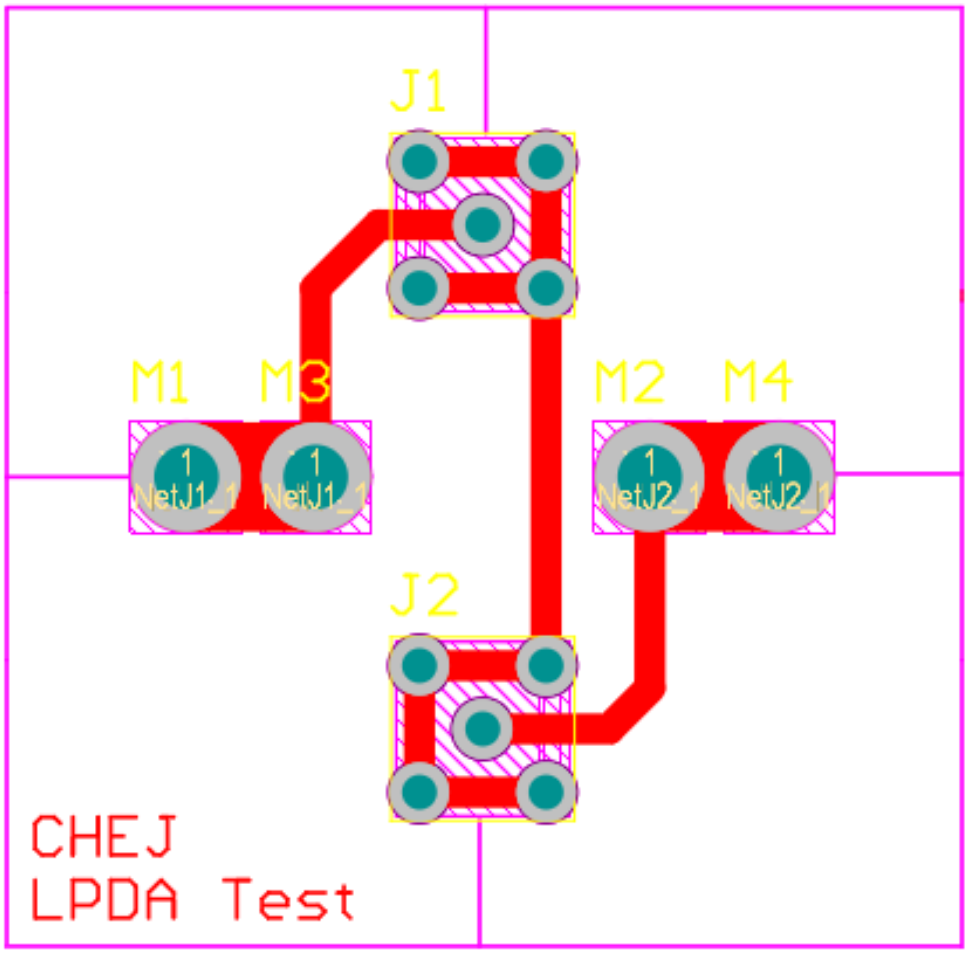
J1
M1
M3
M2
M4
1
NetJ1_1
1
NetJ1_1
1
NetJ2_1
1
NetJ2_1
J2
CHEJ
LPDA Test

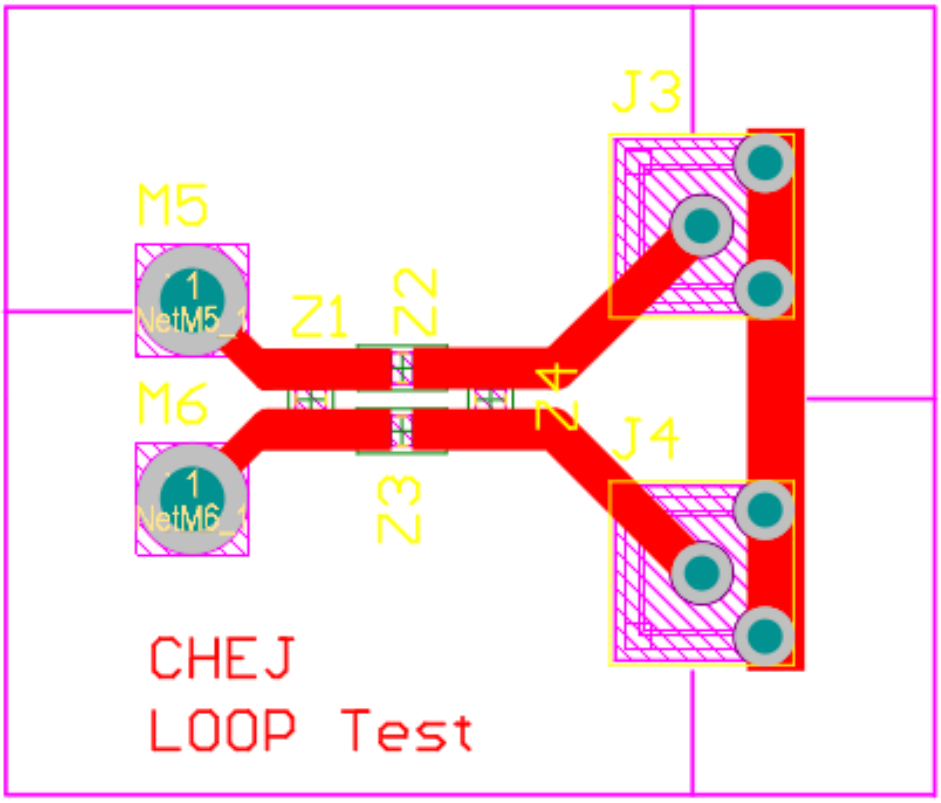
J3
M5
1
NetM5_1
Z1
N2
M6
1
NetM6_1
N4
J4
N3
CHEJ
LOOP Test

Schématique

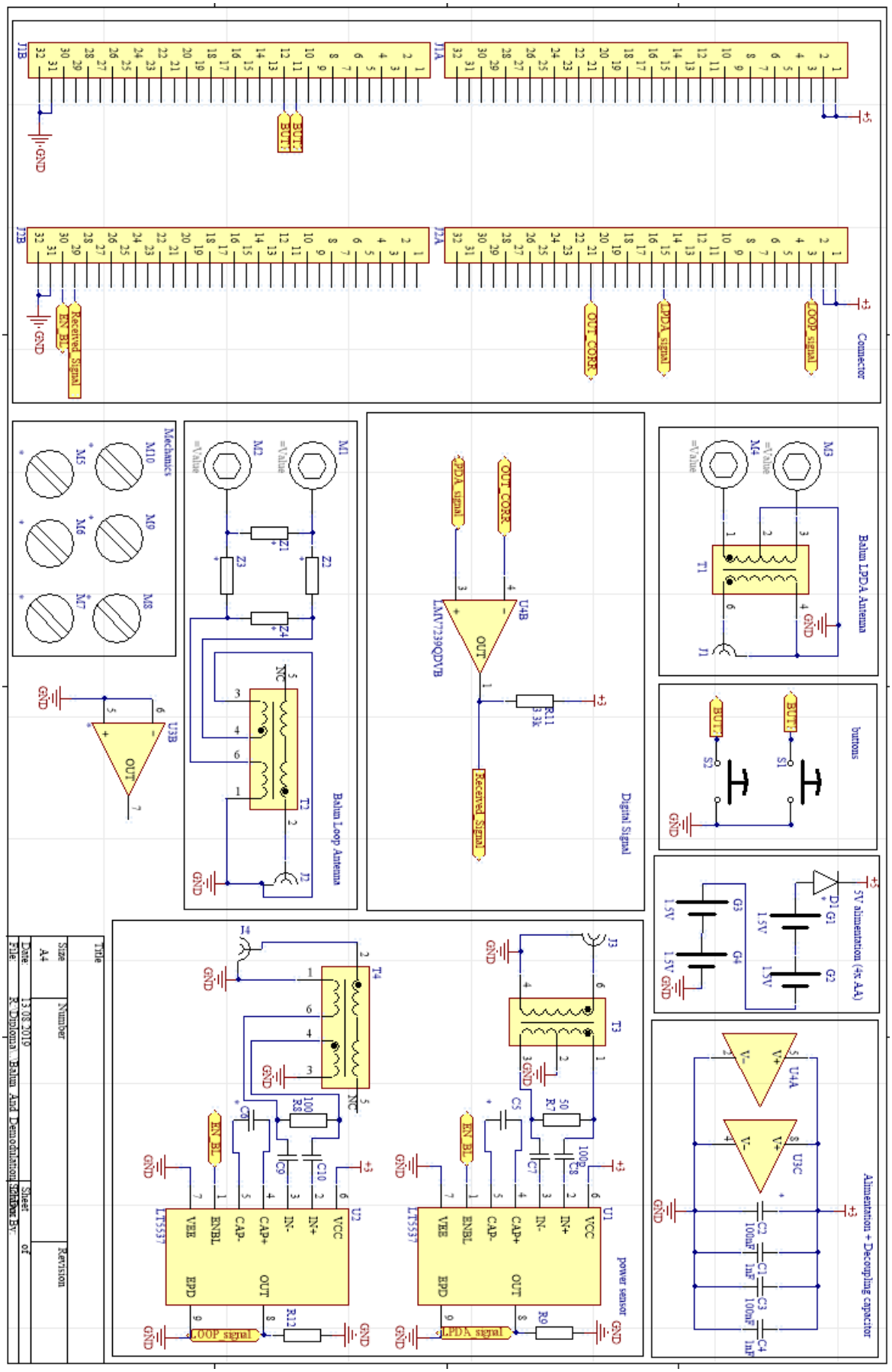

PCBS

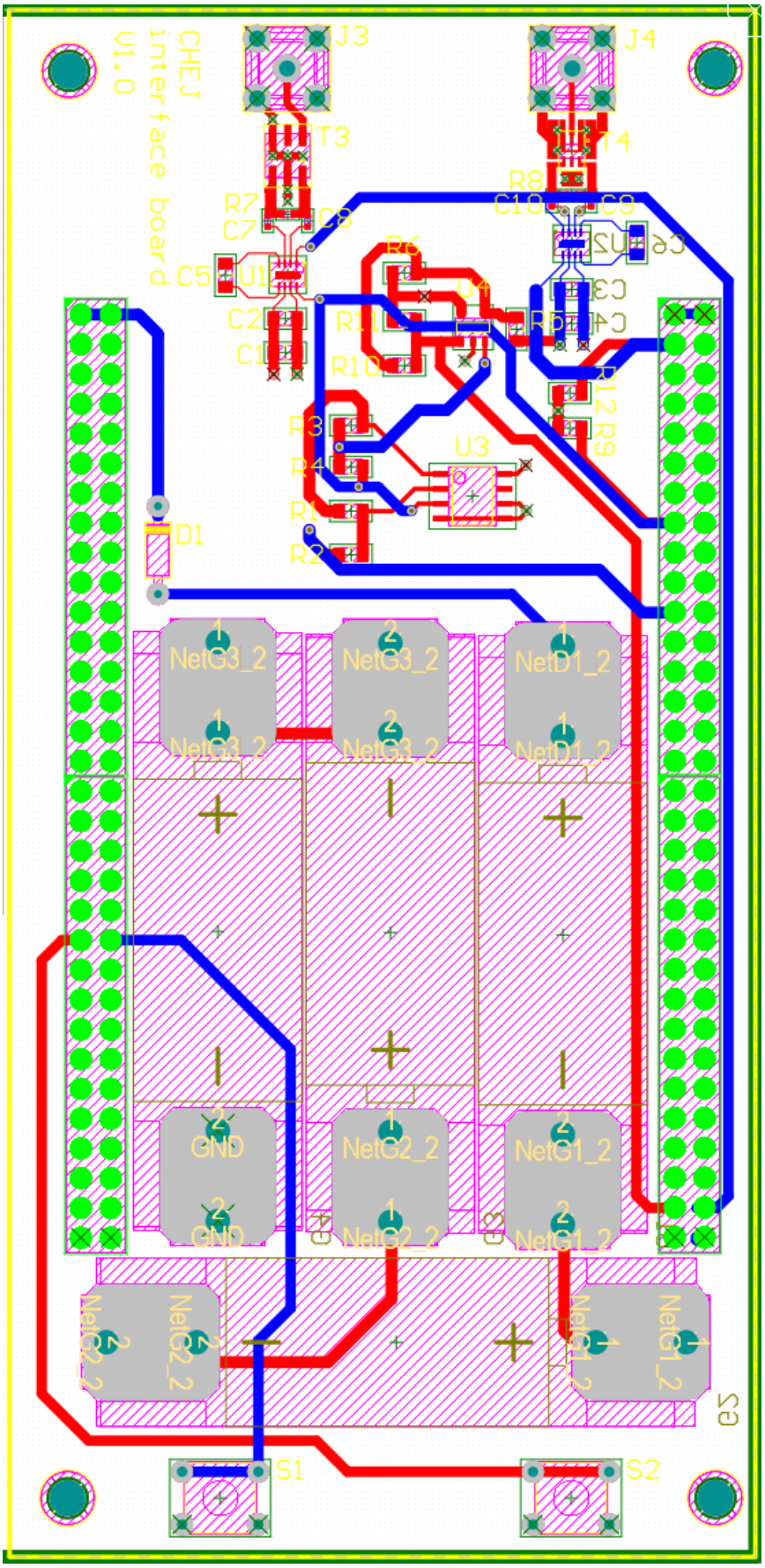
CHEJ
interface board
V1.0
J3
J4
T3
T4
R7
C7
C8
R8
C10
C9
C5
U1
R6
U4
C2
C1
R11
R10
R5
C3
C4
R12
R9
R3
R4
R1
R2
U3
D1
NetG3_2
NetD1_2
GND
NetG2_2
NetG1_2
S1
S2

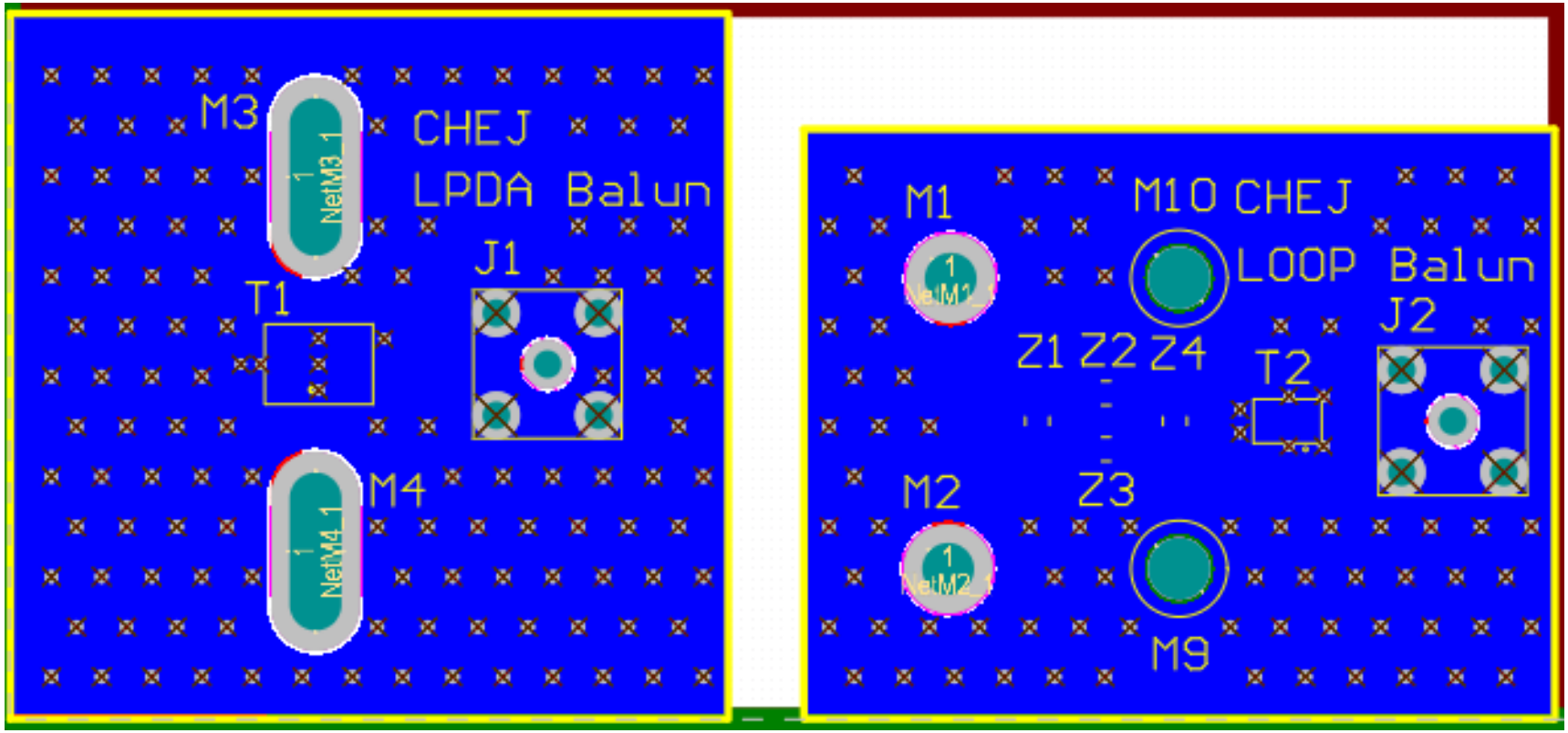
M3
CHEJ
LPDA Balun
J1
T1
M4
M1
M10 CHEJ
LOOP Balun
J2
Z1 Z2 Z4
T2
M2
Z3
M9

Graveuse

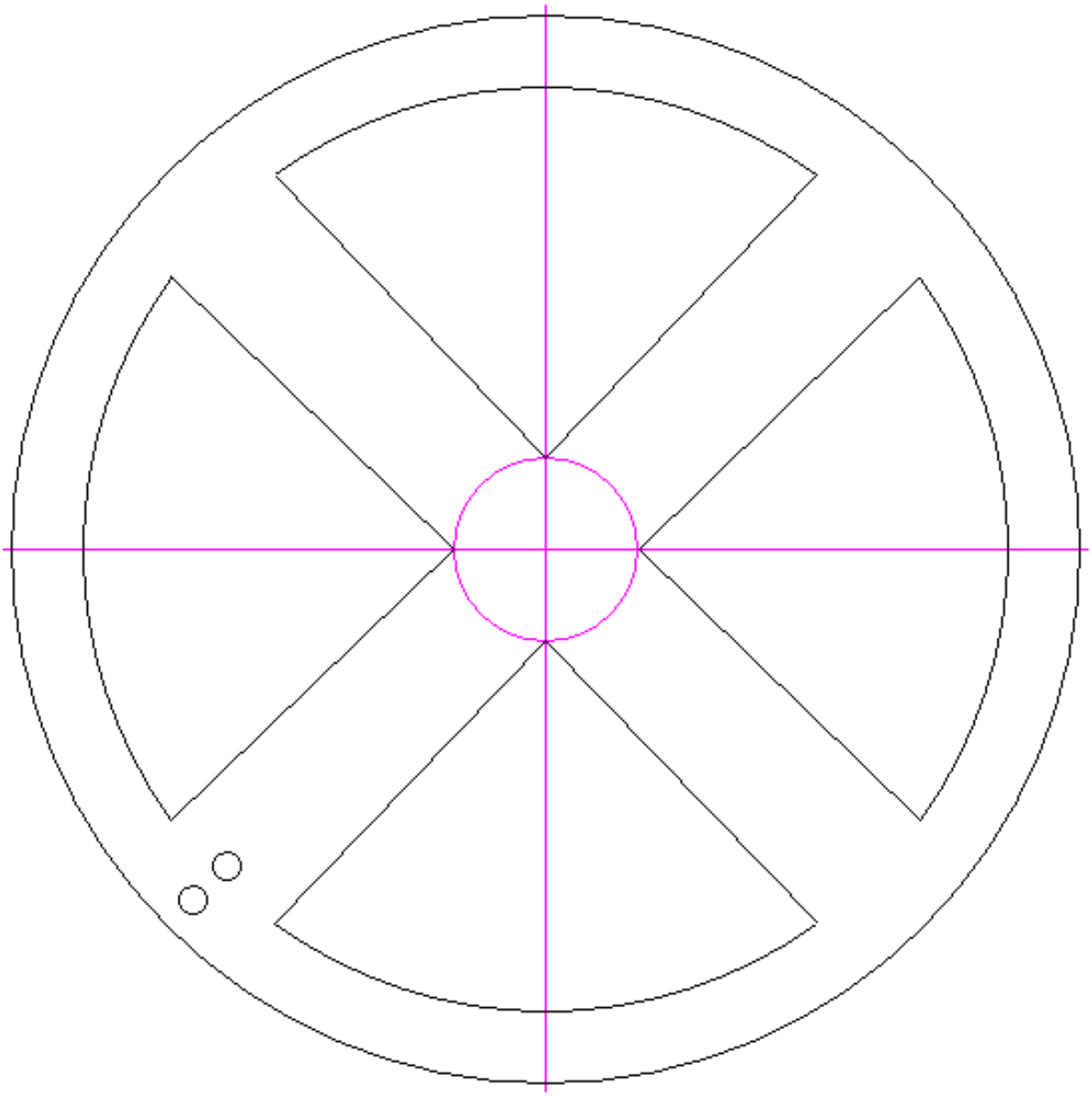

AnSys Simulation

Properties

Name	Value	Unit	Evaluated Value	Type
Frequence	434	MHz	434MHz	Design
LzTerm	0.089*100...		89mm	Design
Cyl_vol	0.5	mm	0.5mm	Design
Boom_Vol	2	mm	2mm	Design
Boom_W	10	mm	10mm	Design
Boom_L	10	mm	10mm	Design
spacer	4	mm	4mm	Design
Sigma	0.095		0.095	Design
T	0.8		0.8	Design
R3	1.25	mm	1.25mm	Design
L0	357	mm	357mm	Design
L1	T*L0		285.6mm	Design
L3	T*L2		182.784mm	Design
L2	T*L1		228.48mm	Design
Lambda0	2*L0		714mm	Design
Lambda1	2*L1		571.2mm	Design
Lambda2	2*L2		456.96mm	Design
Lambda3	2*L3		365.568mm	Design
D0	Sigma*La...		67.83mm	Design
D1	Sigma*La...		122.094mm	Design
D2	Sigma*La...		165.5052mm	Design
D3	D2+LzTerm		254.5052mm	Design
Boom_H	D3		254.5052mm	Design
R0	2.5	mm	2.5mm	Design
R1	2	mm	2mm	Design
R2	1.5	mm	1.5mm	Design
c	299792458		299792458	Design
wawlength	c/Freque...		0.69076603225806	Design
Frequ	434	MHz	434MHz	Design
Lambda	c/Frequ		0.69076603225806	Design

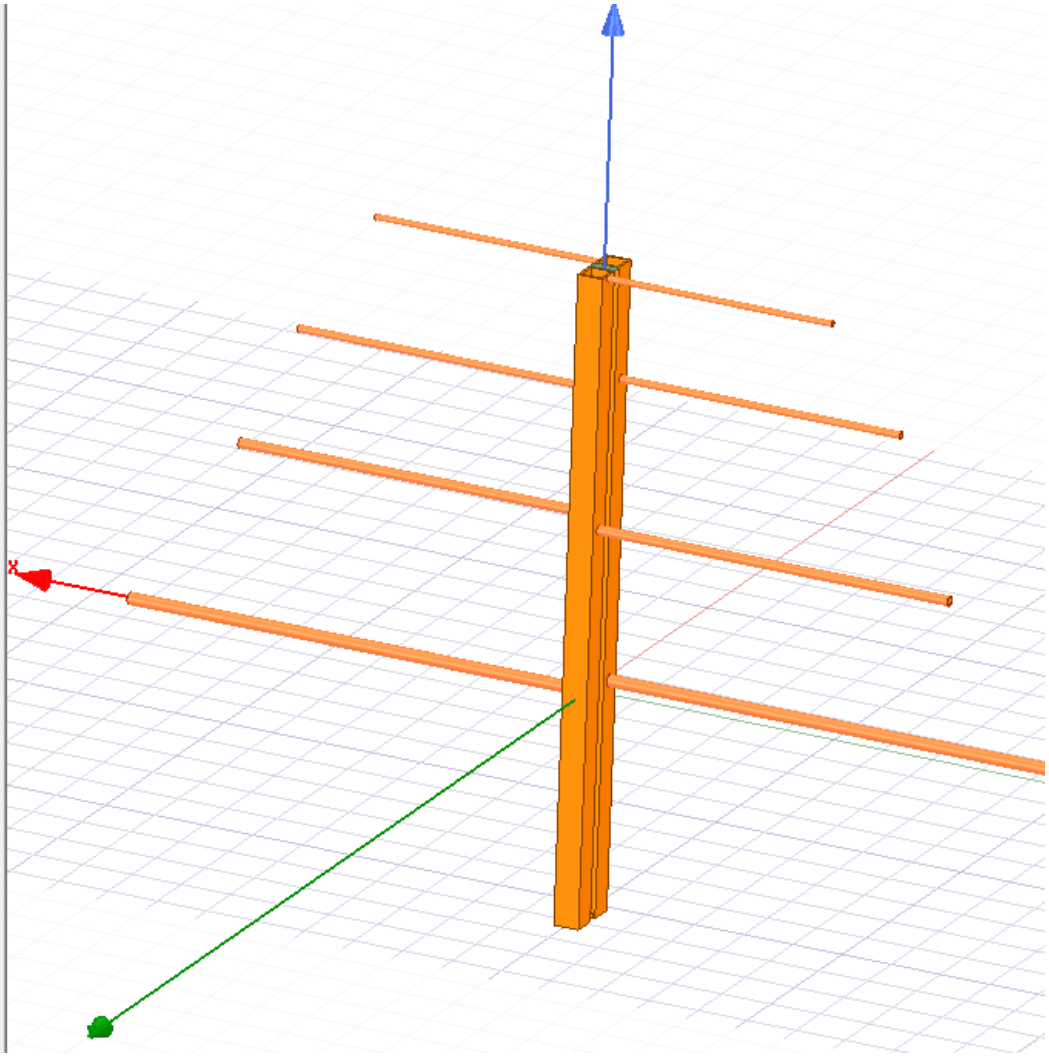

Properties
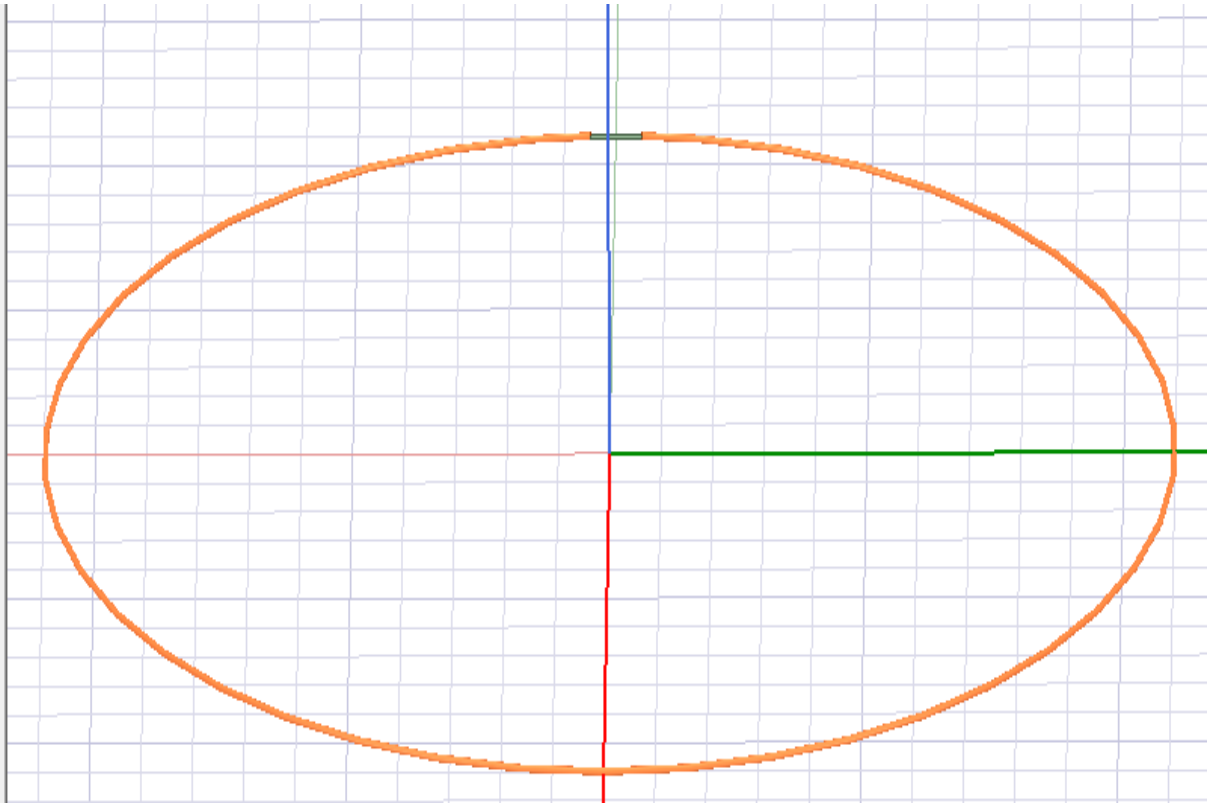
Name	Value	Unit	Evaluated Value	Type
majRad	Lambda/(...		0.11001493762113	Design
minRad	sqrt(Sect/pi)		0.00056418958354776	Design
rad	2*minRad		0.0011283791670955	Design
H	10	mm	10mm	Design
Frequ	434	MHz	434MHz	Design
Lambda	c/Frequ		0.69124423963134	Design
c	300000000	m_per_sec	300000000m_per_sec	Design
Frequence	434	MHz	434MHz	Design
tuning	1		1	Design
BW	1	mm	1mm	Design
Sect	1	mm2	1mm2	Design
Diameter	2*majRad	m	0.22002987524225m	Design