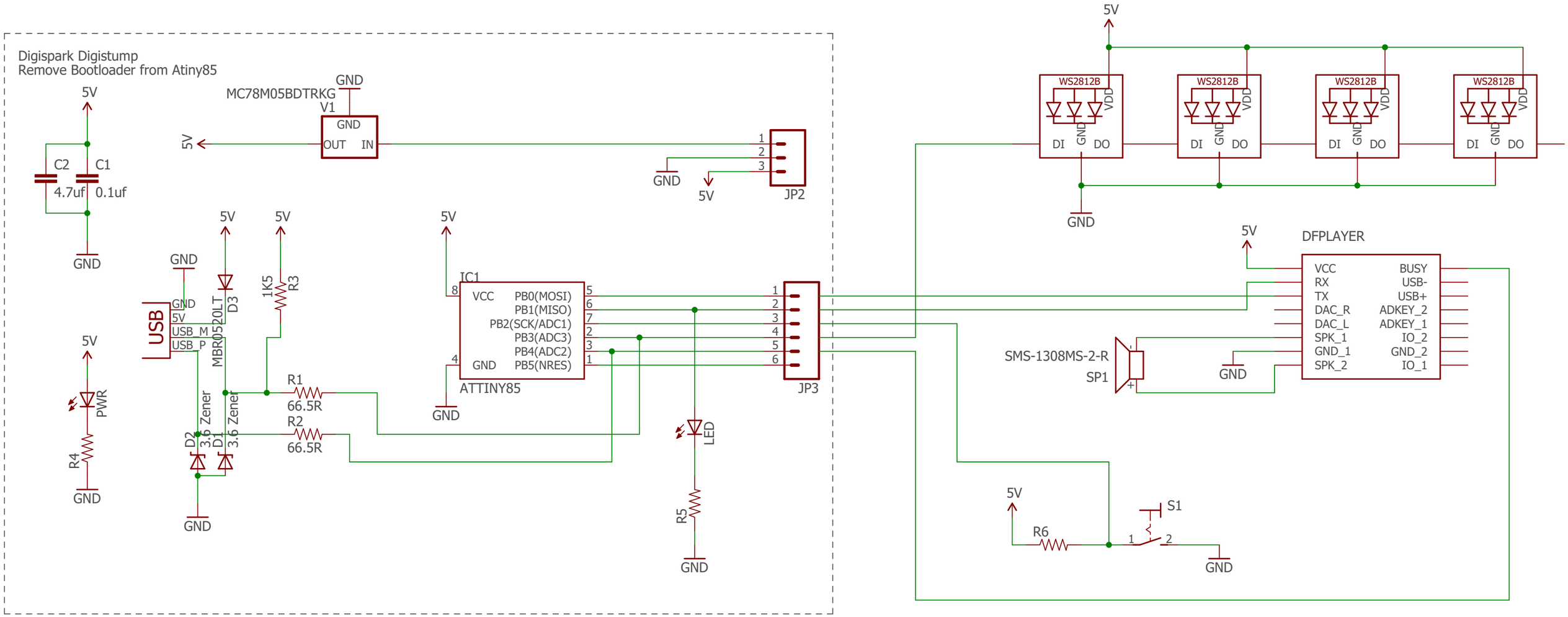
Digispark Digistump
Remove Bootloader from Atiny85
5V
C2
C1
4.7uf
0.1uf
GND
MC78M05BDTRKG
V1
GND
OUT
IN
JP2
USB
USB_M
USB_P
D3
MBR0520LT
1K5
R3
R1
66.5R
R2
66.5R
D2
D1
3.6 Zener
PWR
R4
IC1
VCC
PB0(MOSI)
PB1(MISO)
PB2(SCK/ADC1)
PB3(ADC3)
PB4(ADC2)
PB5(NRES)
ATTINY85
JP3
LED
R5
WS2812B
DI
DO
VDD
DFPLAYER
VCC
RX
TX
DAC_R
DAC_L
SPK_1
GND_1
SPK_2
BUSY
USB-
USB+
ADKEY_2
ADKEY_1
IO_2
GND_2
IO_1
SMS-1308MS-2-R
SP1
R6
S1