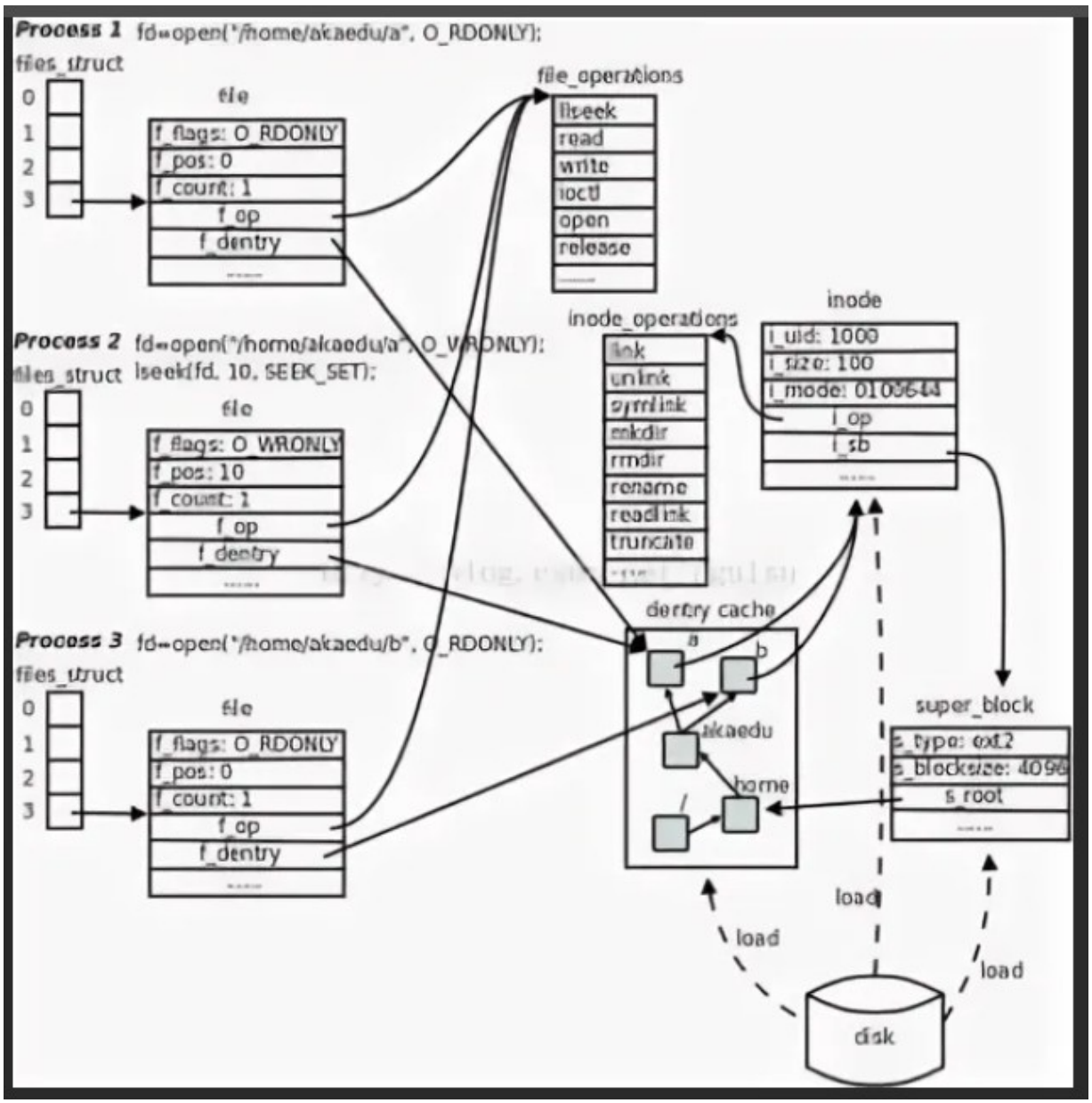
Process 1 fd=open("/home/akaedu/a", O_RDONLY);
files_struct
0
1
2
3
file
f_flags: O_RDONLY
f_pos: 0
f_count: 1
f_op
f_dentry
file_operations
llseek
read
write
ioctl
open
release
Process 2 fd=open("/home/akaedu/a", O_WRONLY);
lseek(fd, 10, SEEK_SET);
f_flags: O_WRONLY
f_pos: 10
inode_operations
link
unlink
symlink
mkdir
rmdir
rename
readlink
truncate
inode
i_uid: 1000
i_size: 100
i_mode: 0100644
i_op
i_sb
dentry cache
a
b
akaedu
home
/
Process 3 fd=open("/home/akaedu/b", O_RDONLY);
super_block
s_type: ext2
s_blocksize: 4096
s_root
load
disk