E344 Assignment 8

Dean Jeggels
23676787

Report submitted in partial fulfilment of the requirements of the module Design (E) 344 for the degree Baccalaureus in Engineering in the Department of Electrical and Electronic Engineering at Stellenbosch University.

October 8, 2022

Stellenbosch UNIVERSITY IYUNIVESITHI UNIVERSITEIT | forward together sonke siya phambili saam vorentoe

Plagiaatverklaring / *Plagiarism Declaration*

1. Plagiaat is die oorneem en gebruik van die idees, materiaal en ander intellektuele eiendom van ander persone asof dit jou eie werk is.
   Plagiarism is the use of ideas, material and other intellectual property of another's work and to present is as my own.

2. Ek erken dat die pleeg van plagiaat 'n strafbare oortreding is aangesien dit 'n vorm van diefstal is.
   I agree that plagiarism is a punishable offence because it constitutes theft.

3. Ek verstaan ook dat direkte vertalings plagiaat is.
   I also understand that direct translations are plagiarism.

4. Dienooreenkomstig is alle aanhalings en bydraes vanuit enige bron (ingesluit die internet) volledig verwys (erken). Ek erken dat die woordelikse aanhaal van teks sonder aanhalingstekens (selfs al word die bron volledig erken) plagiaat is.
   Accordingly all quotations and contributions from any source whatsoever (including the internet) have been cited fully. I understand that the reproduction of text without quotation marks (even when the source is cited) is plagiarism

5. Ek verklaar dat die werk in hierdie skryfstuk vervat, behalwe waar anders aangedui, my eie oorspronklike werk is en dat ek dit nie vantevore in die geheel of gedeeltelik ingehandig het vir bepunting in hierdie module/werkstuk of 'n ander module/werkstuk nie.
   I declare that the work contained in this assignment, except where otherwise stated, is my original work and that I have not previously (in its entirety or in part) submitted it for grading in this module/assignment or another module/assignment.

23676787 Studentenommer / *Student number*	Jeggels Handtekening / *Signature*
D. Jeggels Voorletters en van / *Initials and surname*	October 8, 2022 Datum / *Date*

Contents

Declaration i

List of Figures iv

Nomenclature v

1. Literature survey 1

1.1. Operational amplifiers . . . 1
1.2. Current sensing . . . 3
1.2.1. Low-side current sensing . . . 3
1.2.2. High-side current sensing . . . 3
1.3. Converting PWM signals to analog equivalents . . . 4
1.4. Interfacing with and using the ultrasonic sensor . . . 4
1.5. Fundamental operation of the range sensor . . . 5
1.6. Converting digital values to analogue equivalents . . . 6
1.7. Lead-acid battery voltages and currents . . . 7

2. Detail design 8

2.1. Voltage regulator . . . 8
2.2. Current sensor . . . 9
2.2.1. Op amp design . . . 9
2.2.2. Filter design . . . 10
2.3. Analogue range sensor . . . 11
2.3.1. Filter design . . . 11
2.3.2. Gain design . . . 11
2.4. Digital to analogue converter . . . 13
2.5. Motor Control . . . 14
2.5.1. Differential Amplifier Subtractor . . . 14
2.5.2. Emitter follower current amplifier . . . 15
2.6. Left Wheel motor control . . . 16
2.6.1. Current sensing . . . 16
2.6.2. Lowside switch . . . 16
2.7. Battery . . . 18
2.7.1. Battery Charger . . . 18
2.7.2. Under-voltage protection . . . 19
2.7.3. **Battery voltage signal conditioning** . . . 20
2.8. Firmware . . . 20

3. Results **21**
3.1. Voltage regulator . . . 21
3.1.1. Measurements . . . 21
3.2. Current sensor . . . 22
3.2.1. Simulation . . . 22
3.2.2. Measured results . . . 22
3.3. Ultrasonic sensor . . . 24
3.3.1. Simulation . . . 24
3.3.2. Measurements . . . 25
3.4. DAC . . . 26
3.4.1. Simulation . . . 26
3.4.2. Measurements . . . 27
3.5. Motor Control . . . 28
3.5.1. Simulation . . . 28
3.5.2. Measurements . . . 28
3.6. Left wheel . . . 29
3.6.1. Simulation . . . 29
3.6.2. Measurements . . . 29
3.7. Battery Charger . . . 30
3.7.1. Simulation . . . 30
3.7.2. Measurements . . . 30
3.8. Under-voltage protection . . . 30
3.8.1. Simulation . . . 30
3.8.2. Measurements . . . 31
3.9. Battery voltage signal conditioning . . . 31
3.10. Firmware . . . 31

4. Physical implementation **32**
4.1. Current sense circuit . . . 32
4.2. Ultrasonic signal conditioning . . . 33
4.3. DAC . . . 34
4.4. Final right wheel circuit . . . 35

Bibliography **36**

A. Social contract **37**

B. GitHub Activity Heatmap **38**

List of Figures

1.1. First order lowpass filter . . . 1
1.2. Op amp configurations . . . 2
1.3. Current sensing configurations . . . 3
1.5. Timing diagram of ultrasonic sensor . . . 4
1.7. Invertingsumming amp with offset . . . 6

2.1. Voltage regulator . . . 8
2.2. Full low-side current sensing circuit . . . 10
2.3. 2nd order low-pass filter . . . 11
2.4. Final circuit design for PWM to analog . . . 12
2.5. Voltage divider . . . 13
2.6. DAC . . . 13
2.7. Differential amplifier . . . 14
2.8. Emitter follower . . . 15
2.9. Left wheel current sense circuit . . . 16
2.10. Low-side switch . . . 17
2.11. Battery charging circuit . . . 18
2.12. Schmitt trigger . . . 19

3.1. Measured output of voltage regulator . . . 21
3.2. Step input of circuit . . . 22
3.3. Noise at the input of filter vs noise after filter . . . 22
3.4. Final output of system . . . 22
3.5. Simulation results for PWM to analog . . . 24
3.6. Current usage of our PWM to analog circuit . . . 24
3.8. Analogue voltage vs Digital input . . . 26
3.9. Current usage of DAC . . . 26
3.10. Motor control differential amplifier results . . . 28
3.11. Emitter follower . . . 28
3.13. Battery Charger results from simulation . . . 30

4.1. Physical circuit implementation Current sense . . . 32
4.2. Physical circuit implementation Ultrasonic signal conditioning . . . 33
4.3. Physical circuit implementation DAC . . . 34
4.4. Physical circuit implementation Right wheel . . . 35

Nomenclature

Acronyms and abbreviations

Op amp	Operational Amplifier
CMRR	Common mode rejection ratio
PSU	Power supply unit
PWM	Pulse width modulation
LSB	Least significant bit
MSB	Most significant bit
KCL	Kirchoffs current law
DAC	Digital-to-analogue converter
GND	Common ground
UT	Upper threshold
LT	Lower threshold
DL	Digital Low
DH	Digital high

Chapter 1

Literature survey

1.1. Operational amplifiers

In this section we will discuss the design choices made regarding the use of the given operational amplifiers.

Operational amplifiers: limitations and considerations

The MCP6242-E/P and its datasheet [1] has been provided. It operates at a supply voltage of 1.8V-5.5V. It typically draws a supply current of 50uA. We are going to use a rail voltage of 5V and ground to power our op-amp as per user requirements. Our amplifier must have an input common-mode voltage range specified at or below ground level for low side current sensing since we working with very small voltage at the input or a common-mode voltage that is specified at the voltage supply level or higher if we use high-side sensing. The Op amp has a high CMRR of typically 75 which will allow it to sense very small common mode signals and reflect it across the output. Our signal will consist of a DC component(Voltage drop over current sense resistor) and and AC component(Noise).

Operational amplifier configurations

Our goal for the amplifier is to amplify a small voltage signal from a current sense resistor that is proportional to the current through a load. The signal is first passed through a first order low pass filter which will filter out all the high frequency disturbance noise injected into our signal at 1kHz or higher as per user requirements. We then expect to be left with a filtered AC signal with the DC offset that is the voltage drop

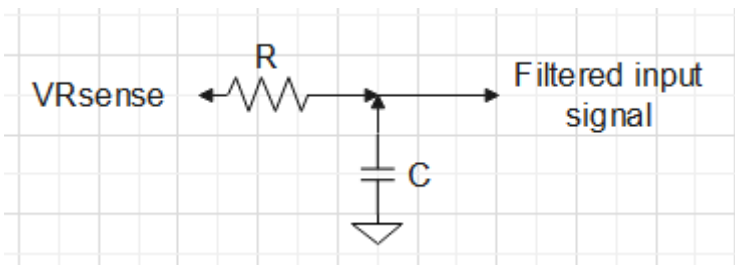

Figure 1.1: First order lowpass filter

Two basic configurations can be considered for our design which provide us with a gain to amplify our small voltage signal, Non-inverting and Inverting.

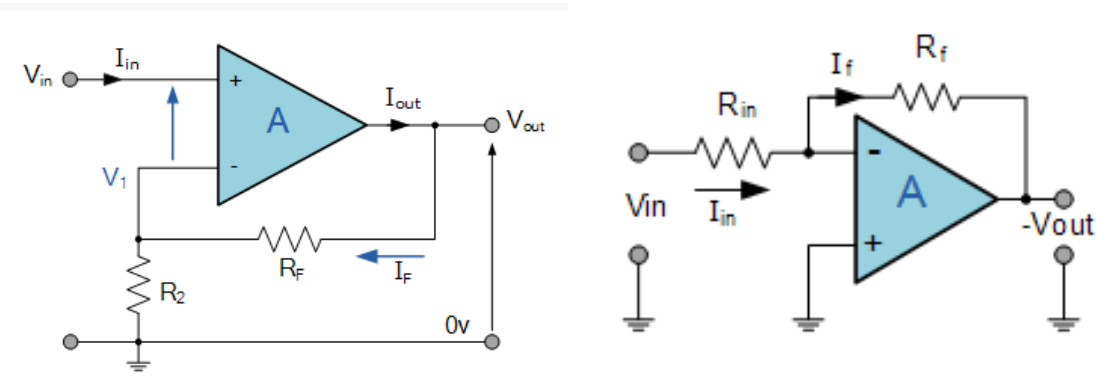

(a) Non-Inverting configuration [2]

(b) Inverting configuration [2]

Figure 1.2: Op amp configurations

.

It is best to use a Non-inverting configuration given the nature of the output we need. This configuration provides us with a positive gain and thus a positive output which can be easily adjusted by our gain feedback resistors Rf and R2 as seen in figure 1.2a. We need the to feed the input signal into the Non inverting terminal of our Op amp. We expect an output signal that has an identical shape as our filtered input signal but is amplified substantially.

1.2. Current sensing

Our goal is to amplify a small voltage signal through a current sense resistor, placed in series with a load, that is directly proportional to the current through the load.The value of the resistor needs to be high enough to allow a sensible voltage drop over the resistor but low enough to not dissipate too much power. The voltage drop across the sense resistor gives us a common mode voltage which gets fed into our Op amp circuit. This is important as the common mode voltage needs to be taken into consideration when we decide which configuration to work with.

1.2.1. Low-side current sensing

Placing the current sense resistor between the load and ground as in figure 1.3a is called low-side current sensing. For low-side current sensing we will get a common mode voltage close to ground. This means we should be able to handle very small voltage drops across the sense resistor.

1.2.2. High-side current sensing

Placing the resistor between the bus and load as in figure 1.3b is called high-side current sensing. Our common mode voltage for high-side sensing will be close to the voltage supply we use. This implies that our amplifier circuit should be able to handle very high common mode voltages.

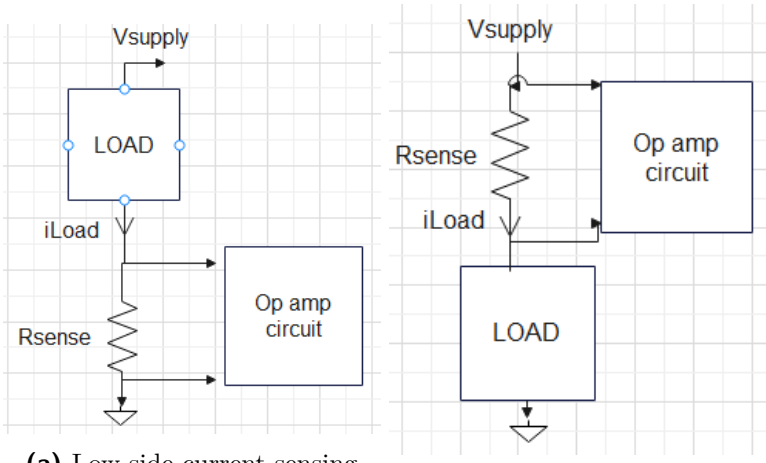

(a) Low-side current sensing

(b) High-side current sensing

Figure 1.3: Current sensing configurations

.

1.3. Converting PWM signals to analog equivalents

PWM is the method of creating an analog signal from a pulse signal with a fixed frequency and amplitude with the analog signal being proportional to the varying pulse width of the signal. [3]

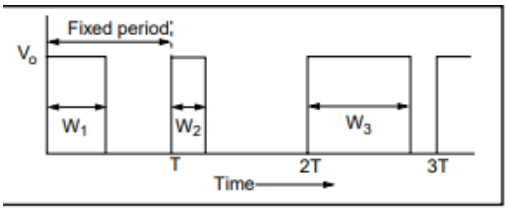

(a) Typical PWM signal [3]

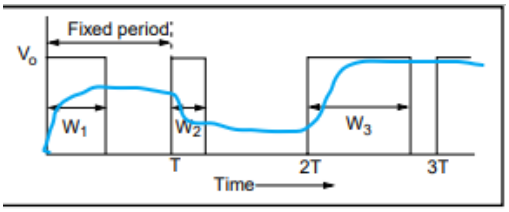

(b) Typical expected analog signal from varying pulse width

We see in figure 1.4b that the signal rises for a wider pulse width and lowers for a smaller pulse width. This can easily be achieved by designing an analog low-pass filter which will attenuate all the high frequency components.

1.4. Interfacing with and using the ultrasonic sensor

All information was obtained from the datasheet of the given ultrasonic sensor [4]. The ultrasonic sensor has a working DC supply voltage of 5V and requires a current supply of 15mA. The following timing diagram will be used to explain the operation of the ultrasonic sensor.

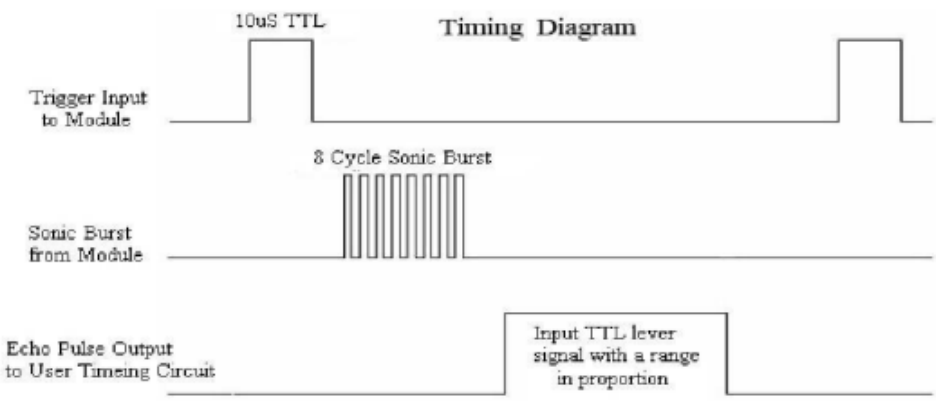

Figure 1.5: Timing diagram of ultrasonic sensor

A short 10uS pulse input is required to trigger the ultrasonic sensor to start ranging. After the sensor has received this trigger through the trigger pin it sends 8 ultrasonic short bursts at 40khz. The sensor then detects if there is a pulse signal sent back known as an echo. This pulse can range from min 2cm up to 4m of range. The received echo signal has a pulse width proportional to the distance of the object. In other words a short pulse echo corresponds to a

short distance and a long pules width corresponds to a object detected far away. This pulse signal relates to distance according to equation 2.11.

1.5. Fundamental operation of the range sensor

1.6. Converting digital values to analogue equivalents

We are required to use an operational amplifier as a digital to analogue converter. This can be done by having an inverting summing amplifier and having 4 different voltages being fed into the circuit, summed together to give us an output. [0]

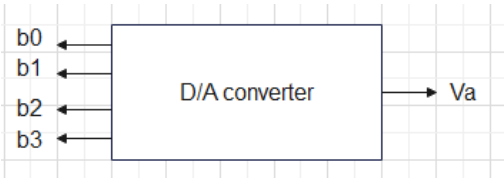

(a) Blockdiagram for DAC

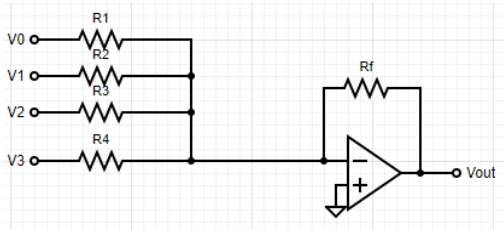

(b) Inverting Summing amplifier

We see that the voltage V_0 corresponds to our LSB b_0 and V_3 corresponds to our MSB b_3. We can derive an output equation for figure 1.6b by doing a KCL at the inverting node. [0]

$$V_{out} = -(V_0 * \frac{Rf}{R1} + V_1 * \frac{Rf}{R2} + V_2 * \frac{Rf}{R3} + V_3 * \frac{Rf}{R4}) \tag{1.1}$$

We see that resistor Rf can be used as a gain control for our circuit. The negative sign indicates the inverted output of our circuit. This is required seeing that the user requirements states that a high voltage is needed for a low binary input and low output voltage needed for a high binary input. Where a binary input of 0000 will usually give 0V it will now give the maximum allowable output voltage as per design. We need to consider the rail voltages of our circuit before designing our circuit. User requirements states the use of 5V and GND rail voltages. This is a problem seeing that our output will be swinging into the negative voltage range but will be capped at 0V by the op amp. This implies that a certain offset needs to be fed into the non-inverting input of our op amp to shift the reference point to a reasonable position to cover our entire range of values.

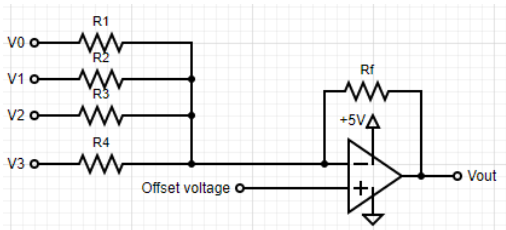

Figure 1.7: Invertingsumming amp with offset

Giving us a new output equation of

$$V_{out} - V_{offset} = -(V_0 * \frac{Rf}{R1} + V_1 * \frac{Rf}{R2} + V_2 * \frac{Rf}{R3} + V_3 * \frac{Rf}{R4}) \tag{1.2}$$

1.7. Lead-acid battery voltages and currents

Chapter 2

Detail design

This section discusses the design choices and reasoning behind it.

2.1. Voltage regulator

We need to regulate a battery voltage of 6-7.5V down to 5V. This regulated voltage will be used to power our ESP32 and various components for the circuit. We have been provided the LD1117 and its datasheet. [0]. The LD1117 has a low dropout voltage of 1V typically and has a very high output current supply of upto 800mA. The following schematic for an adjustable voltage regulation was given in the datasheet. [0]

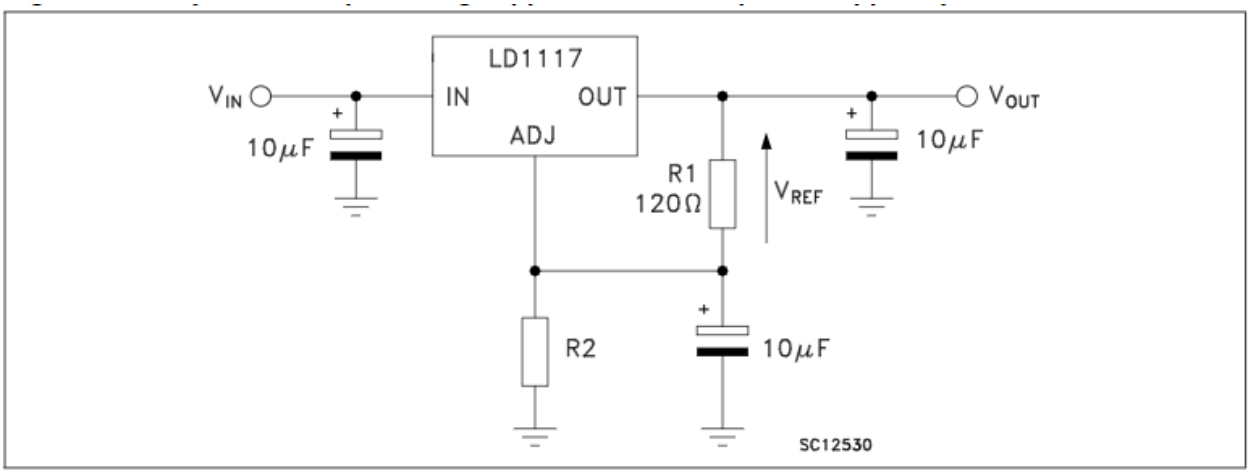

Figure 2.1: Voltage regulator

R1 is fixed to 120 Ω and V_{REF} is a stabilized 1.25V reference voltage. The following output is also derived and obtained from the datasheet.

$$V_{OUT} = V_{REF}(1 + \frac{R2}{R1}) = 1.25(1 + \frac{R2}{120}) \tag{2.1}$$

We want a stable output voltage of 5V. Setting $V_{OUT} = 5\text{V}$, we can solve for R2. $R2 = 360\,\Omega$ We now have all the component values for our voltage regulator design.

2.2. Current sensor

2.2.1. Op amp design

Since we are using a 5V supply voltage and ground for our op amp we see that from our datasheet [1], the common mode input range is -0.3V to 5.3V. It is best to use a low-side current sensing circuit seeing that our common mode input range is less than ground and is not close to the supply voltage of 6V of our load. We use the configuration as shown in figure 1.3a. The current sense resistor has been given to us and has a value of $10\,\mathrm{m\Omega}$. A DC motor load has also been given to us with an expected max load current of 1.3A and 200mA running current when using a 6V voltage supply. Using this information we can calculate the max voltage drop across the sense resistor. We will design for a max current of 500mA since we assume that we will never reach stall current.

$$Vinmax = iLoadmax * Rsense = 0.5 * 0.01 = 5\,\mathrm{mV} \tag{2.2}$$

We now know the max voltage that will be sent to our op amp circuit. We will use a Non-inverting op amp configuration as in figure1.2a. We will design our op amp to create a 3.3V max output when the load current is at a max. This is the maximum allowable voltage of our ESP32 analogue input. The gain of our op amp can be obtained by equation 2.3

$$Av = \frac{Voutmax - Voutmin}{Vinmax - Vinmin} = \frac{3.3\,\mathrm{V}}{5\,\mathrm{mV}} = 660 \tag{2.3}$$

We now have a gain and can design the gain resistors of our op amp. By referring to figure1.2a we select resistor Rf as $660\,\mathrm{k\Omega}$. This is quite high and is a design choice made to reduce the amount of current used through the op amp. According to [2] we can use the gain and resistor Rf to calculate resistor R2.

$$Av = 1 + \frac{Rf}{R2} \tag{2.4}$$

$$R2 = \frac{Rf}{Av - 1} = \frac{660\,\mathrm{k\Omega}}{659} = 1\,\mathrm{k\Omega} \tag{2.5}$$

2.2.2. Filter design

We need to filter out a 10 mV 1 kHz signal while maintaining a signal less than 250 mV on the output with a rise time of 0-90 % in less than 100 ms. Referring to figure 1.1 we use the equation 2.6 for rise time of a low pass filter from [2], design for 100 % and pick capacitor C as 100 nF

$$Risetime = 100\,\text{ms} = ln(\frac{1}{0.1}) * R * C \tag{2.6}$$

R= 430 kΩ

we know calculate the cutoff frequency as

$$f = \frac{1}{2 * \pi * R * C} = 3.7\,\text{Hz} \tag{2.7}$$

The cutoff frequency is low enough to filter out the 1 kHz signal and our rise time is expected to reach the requirements using these capacitor and resistor values. We can now construct a full low-side current sensing circuit using all the above designed values.

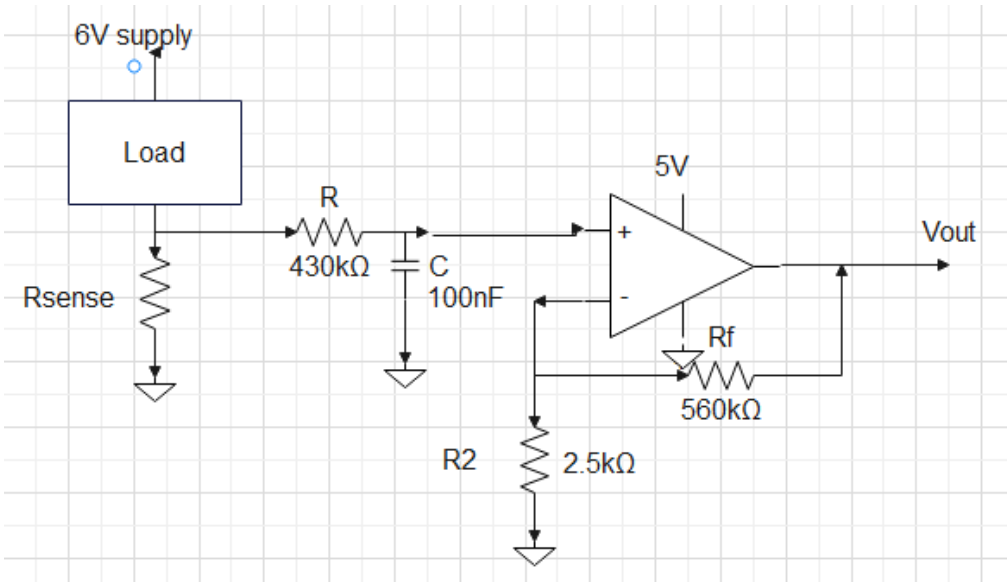

Figure 2.2: Full low-side current sensing circuit

2.3. Analogue range sensor

2.3.1. Filter design

A second order low-pass filter needs to be designed in order to get the required response time of our circuit. a Basic filter design by [0] was followed. As per user requirements we need to have a output signal that reaches 90 % of the final value within 1.5s with a max ripple voltage of 70 mVpk-pk. The ultrasonic sensor has a PWM output swing with a pk-pk amplitude of 5V and period of 60ms.

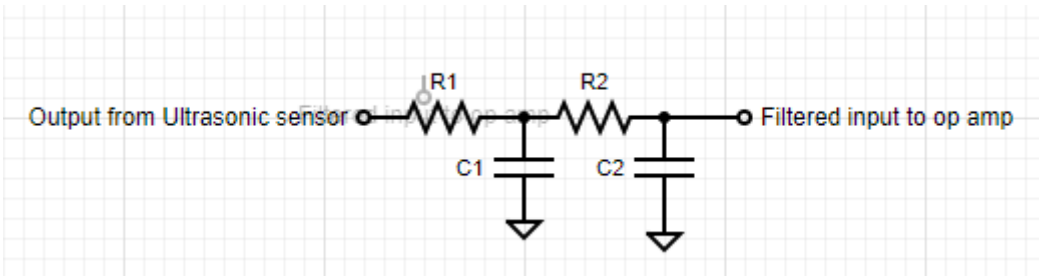

Figure 2.3: 2nd order low-pass filter

The following equations were obtained from [0]. We now calculate the attenuation factor of our 2nd order filter using

$$A_{dB} = 20log(\frac{V_{ripple}}{V_{PWM}}) = 20log(\frac{70\,\mathrm{mV}}{5\,\mathrm{V}}) = -37.08 \tag{2.8}$$

Using this attenuation factor we can get the cutoff frequency of our 2nd order filter.

$$A_{dB} = -37.08 = slope * log(\frac{f_{PWM}}{f_{3dB}}) = -40log(\frac{16.67Hz}{f_{3dB}}) \tag{2.9}$$

$$f_{3dB} = 1.97Hz \tag{2.10}$$

now using equation 2.7 and picking capacitor values of 1 µF for C1 and C2.

We get R1 and R2 to be 85 kΩ. A design choice of 100 kΩ was chosen to account for any margins of error.

2.3.2. Gain design

The following formula was obtained from the ultrasonic sensors datasheet. [1]

$$Testdistance = (highleveltime * velocityofsound)/2 \tag{2.11}$$

This gives us the approximate distance of our object given the high level time of the echo signal. At a distance of 1 meter we have an approximate high level time of 6 ms. We use a simple equation to calculate our average mean output voltage of our PWM signal at a

distance of 1m.

$$AverageVoltage = V_{Pulse} * \frac{HighLevelTime}{Period} = 5 * \frac{6ms}{60ms} = 0.5V \tag{2.12}$$

This does not fit user requirements. We need to have an output voltage of bigger than 3V at a distance of 1m. We thus design a simple non inverting op amp as in figure 1.2a with a variable gain of 6-7. This allows us to fine tune our output voltage to the required level.

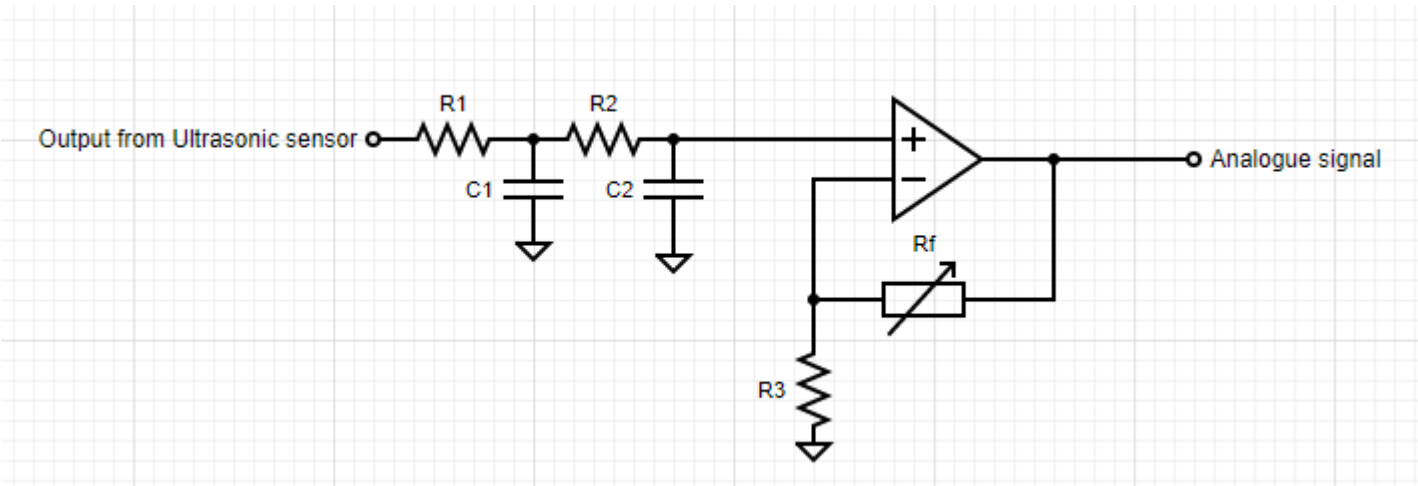

Figure 2.4: Final circuit design for PWM to analog

Table 2.1: Component values

	Resistance [kΩ]	Capacitance [uF]
R1	100	
R2	100	
R3	100	
Rf	600-700	
C1		1
C2		1

We choose big resistor values to reduce the amount of current our circuit uses.

2.4. Digital to analogue converter

For our digital to analogue converter we are going to use an inverting summing amplifier configuration with an offset as in figure 1.7. We use the output equation 1.2. The maximum output voltage, V_{out}, we can obtain is 5V seeing that the op amps rail voltage is specified as 5V and the minimum output voltage is 0V. We expect a binary input of either 1 or 0. A binary number 1 represents a voltage of 3.3V at the input and a binary 0 represents a voltage of 0V at the input. We first design our offset to allow us a maximum voltage of 3.3V instead of 5V so we can not damage the input pins of the ESP32. A simple voltage divider circuit should do the trick that divides the 5V supply to 1.7V. This should give a max allowable voltage of $V_{out} - V_{offset} = 5 - 1.7 = 3.3V$. We pick R1 as 330 kΩ

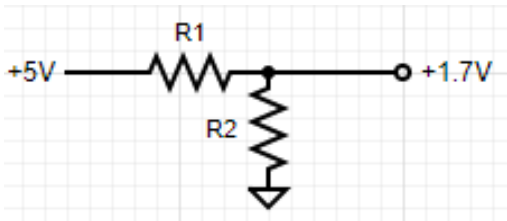

Figure 2.5: Voltage divider

$$1.7 = 5 * \frac{R2}{330k + R2} \tag{2.13}$$

$R2 = 170\,\text{k}\Omega$. We now use equation 1.2 to calculate a value for our gain resistor Rf. We pick $R1 = 800\,\text{k}\Omega, R2 = 400\,\text{k}\Omega, R3 = 200\,\text{k}\Omega, R4 = 100\,\text{k}\Omega$. Assuming a binary input of 1111 we want to design for a output of 3.3V which will give us an inverted output of 0V. Equation 1.2 then becomes.

$$3.3 = 3.3(\frac{Rf}{800k} + \frac{Rf}{400k} + \frac{Rf}{200k} + \frac{Rf}{100k}) \tag{2.14}$$

$Rf = 53.33\,\text{k}\Omega$, We pick Rf=50 kΩ for convenience.

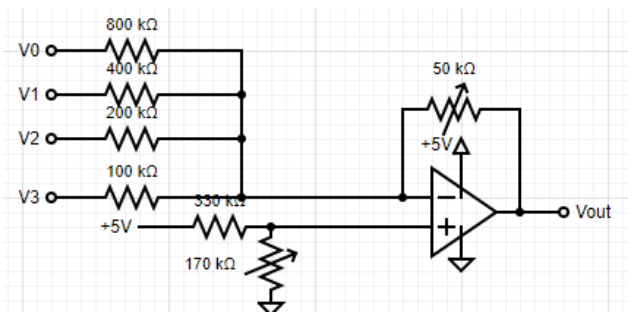

Figure 2.6: DAC

Variable resistors for Rf and our voltage divider resistor R2 will allow for fine tuning of the final results.

2.5. Motor Control

2.5.1. Differential Amplifier Subtractor

The DAC output represents a speed command and the ultrasonic sensor gives a analogue output corresponding to how close the car is to hitting an object. We need to use these 2 outputs in order to control the right wheel of our car. When an object is far we get a high 3.3V output and when an object is close we get a 0V output from the sensor circuit. A 4 bit binary number of 0000 represents a slow speed command and gives an output voltage of 3.3V whereas a fast command or 1111 gives an output voltage of 0V from the DAC circuit. Subtracting these 2 outputs from each other will give us the appropriate motor control voltage. This can be done by a differential amplifier configuration. [0]

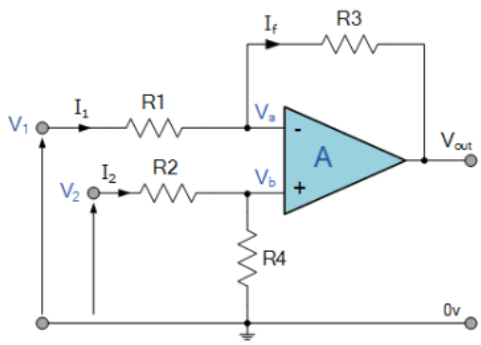

Figure 2.7: Differential amplifier

The output equation can be given by [0]

$$V_{OUT} = \frac{R3}{R1}(V_2 - V_1) \tag{2.15}$$

for R1=R2, R3=R4, V_1 = speed command and V_2 = Range output from sensor
We want a max output voltage of atleast 6.2V ($V_{BATT} - 1$) according to user requirements. The highest voltage will be from a high speed command with no object in range.We will design for a max output voltage of 6.5V to leave margin for error. Equation 2.15 then becomes.

$$6.5 = \frac{R3}{R1}(3.3 - 0) \tag{2.16}$$

choosing R1 = 100 kΩ , yields R3 = 200 kΩ

The MCP6242 only has a max supply voltage of 5.5V [1]. This means that we cant use the MCP6242 seeing that the rail voltages are too low. We implement the above differential amplifier with the TLC2272 which has a max supply voltage of 8V [0] and power it with the battery voltage.

2.5.2. Emitter follower current amplifier

The output current from the TLC2272 is capped at 50mA. This is too low to drive the motor. We amplify this current using an emitter follower circuit. [0]

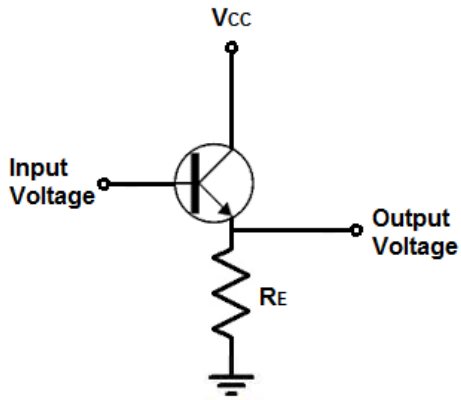

Figure 2.8: Emitter follower

Our running current for the motor was measured as about 200mA. We design the resistor R_E according to this specification. The following equation can be derived using a KVL loop through the input-output loop of the transistor.

$$V_{IN} - V_{be(on)} - I_E R_E = 0 \tag{2.17}$$

$$6.2 - 0.6 - (200 * 10^{-3})(R_E) = 0 \tag{2.18}$$

$R_E = 28\,\Omega$

2.6. Left Wheel motor control

2.6.1. Current sensing

The current sensing circuit for the left wheel follows the same design as in section 2.2 however since we are using MOSFET based PWM control we need to consider the switching frequency of the MOSFET when designing our filter. The FQU13N06LTU [0] has a turn-on Delay time of max 25ns and a turn-on Rise time of 190ns. This means a max turn-on time of 215ns. The max turn-off delay time is 50ns and turn-off fall time 90ns, giving a max turn-off time of 140ns. We can thus not drive the MOSFET at frequencies of 2.817MHz.

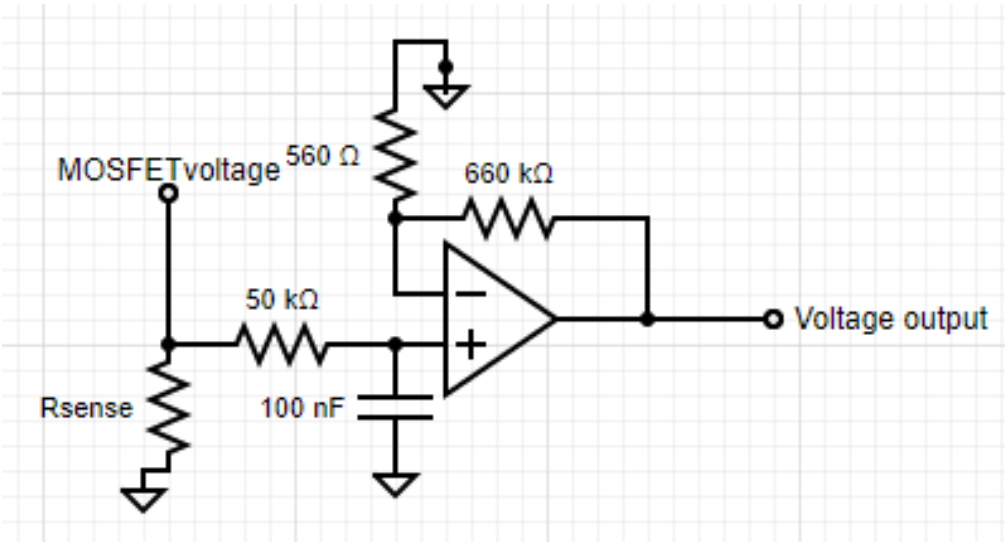

Figure 2.9: Left wheel current sense circuit

2.6.2. Lowside switch

For low side switching we have the motor control PWM signal at the gate of the NMOSFET. The load is connected to the drain side of the NMOSFET. A lowside switch is ideal for motor control as it requires a much lower gate voltage to enable the MOSFET to be switched on. The MOSFET we will be using is the FQU13N06LTU NMOS tranistor [0]. It has a low enough V_{GS} threshold voltage of 1-2.5V , this will allow the MOSFET to be switched on by our 3.3V PWM signal. The MOSFET has a high enough drain current of 11A which will supply enough current to the motor. The Resistance $R_{DS_{on}}$ is low enough at 0.115V typical for a drain current of 1A too which will not cause a significant voltage drop over the load where $V_{load} = \frac{V_{in} * R_L}{R_{DS} + R_L}$. A pull down resistor needs to be implemented between gate and ground the prevent the pins of the NMOSFET and ESP32 from floating. A flyback diode is connected in parallel with the motor to dissipate any back-emf created by the motor when the MOSFET switches it off.

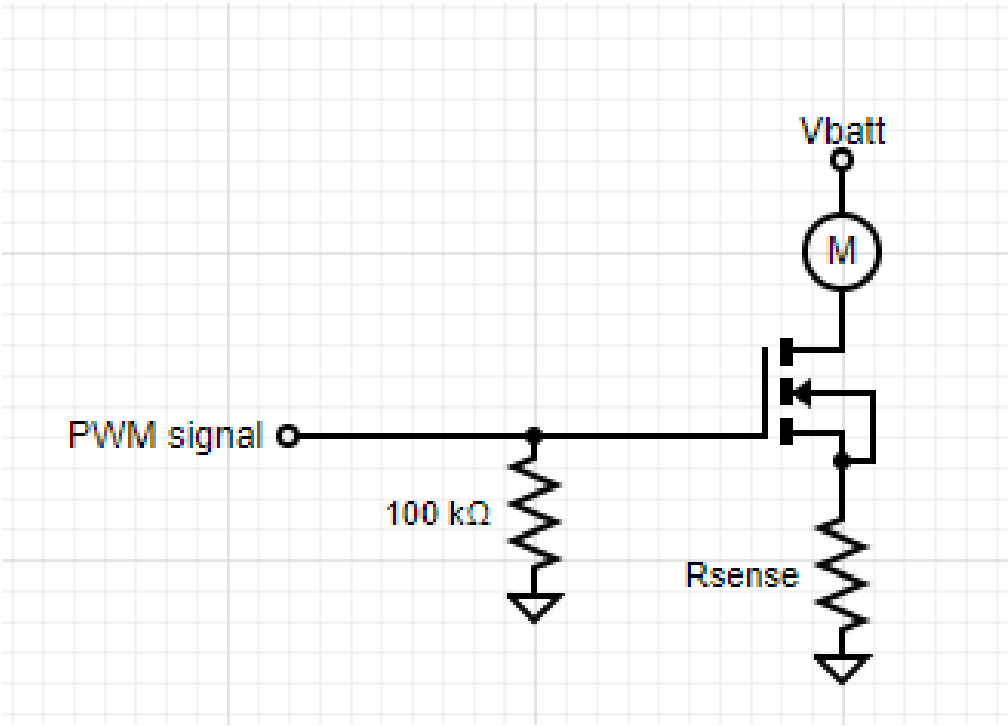

Figure 2.10: Low-side switch

2.7. Battery

2.7.1. Battery Charger

The following schematic has been provided for the battery charger circuit. With D1 and D2 diodes 1N5819, M1 the irf9z24n PMOSFET and M2 the 2N7002 NMOSFET. It is a linear regulator because the output is controlled using a resistor.

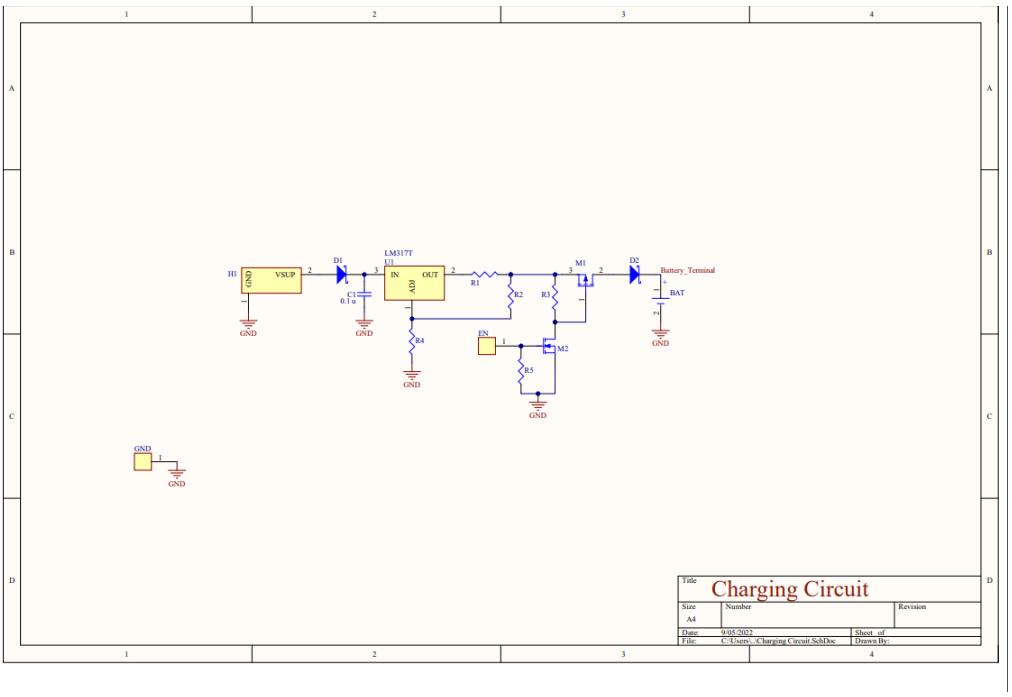

Figure 2.11: Battery charging circuit

Resistor R1 sets the output impedance of the charger with $Z_{out} = R_1(1 + \frac{R_4}{R_2})$. A KVL loop from V_{out} to the battery terminal yields the following equation.

$$V_{out} = V_{DS_{M1}} + V_{D2} = 8V \tag{2.19}$$

also obtained from the datasheet of the LM317T we get the following output equation

$$V_{out} = V_{REF}(1 + \frac{R4}{R2}) + I_{ADJ}R_4 \tag{2.20}$$

the device was designed to minimize the term I_{ADJ} thus making it neglegible. With $V_{REF} = 1.25V$ and $V_{out} = 8V$ and choosing R2 $= 1\,\mathrm{k}\Omega$ for a low I_{R2} current.It follows that R4 $= 5.4\,\mathrm{k}\Omega$

The battery has a constant current charge of 400mA. Assuming I_2 and I_3 are negligibly small we can say that I_{out} is equal to the battery charge current of 400mA. With $I_{out} = \frac{V_{out2} - V_{out1}}{Z_{out}}$ this yields $Z_{out} = 2.56\,\Omega$.

R1 = 0.4 Ω
R5 was chosen as a 100k pull down resistor to prevent the ESP32 pin from floating.

2.7.2. Under-voltage protection

The undervoltage protection consists of a schmitt trigger in op-amp configuration. The basic concept of a schmitt trigger is to take an anologue signal and turn it into a digital signal.When the input is higher than a chosen threshold, the output is high. When the input is below a different (lower) chosen threshold the output is low, and when the input is between the two levels the output retains its value [0]. The basic configuration for the schmitt trigger is shown below.

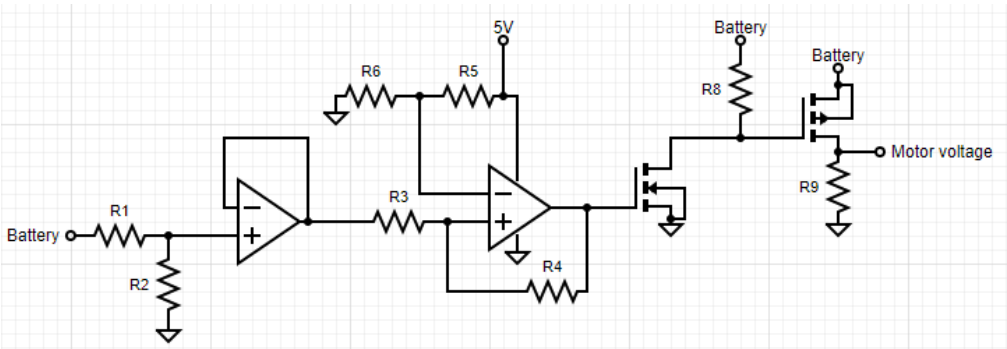

Figure 2.12: Schmitt trigger

The input voltage of the battery is biased at half the voltage since the battery voltage is higher than the op amps rail voltages. This in turn halves our upper and lower voltage thresholds for the circuit to $V_L = 3V$ and $V_H = 3.05V$. The reference voltage at the inverting terminal of our schmitt trigger is biased in the middle of these 2 thresholds.

$$V_{REF} = \frac{V_H + V_L}{2} = 3.025V \tag{2.21}$$

This reference voltage is obtained by using a voltage divider (R6 and R5) with our 5V regulated voltage. $R5 = 100\,\mathrm{k}\Omega, R6 = 153\,\mathrm{k}\Omega$ the following equation was obtained from [0] for a non-inverting schmitt trigger configuration.

$$V_{UT} - V_{LT} = -\frac{R3}{R4}(V_{DL}) + \frac{R3}{R4}(V_{DH}) = 3.05 - 3 = \frac{R3}{R4}(3.05) \tag{2.22}$$

$$\frac{R3}{R4} = 0.01639 \tag{2.23}$$

picking R4 as $R4 = 100\,\mathrm{k}\Omega,\ R3 = 1.6\,\mathrm{k}\Omega$
A NMOS transistor was used to drive a PMOS transistor, irf9z24n, in a high side switch configuration to switch off the voltage to the motor whenever the schmitt trigger outputs a 0V or digital LOW, or turn on the voltage to the motor whenever the voltage outputs a digital HIGH or 5V. Resistors R8 and R9 are simply pull-up and pull-down resistors of 100k

each. When the output of the schmitt trigger is low the NMOS switches off , which in return pulls the gate voltage of the PMOS to battery voltage. This turns off the PMOS and the motor voltage.

2.7.3. Battery voltage signal conditioning

2.8. Firmware

Chapter 3

Results

3.1. Voltage regulator

3.1.1. Measurements

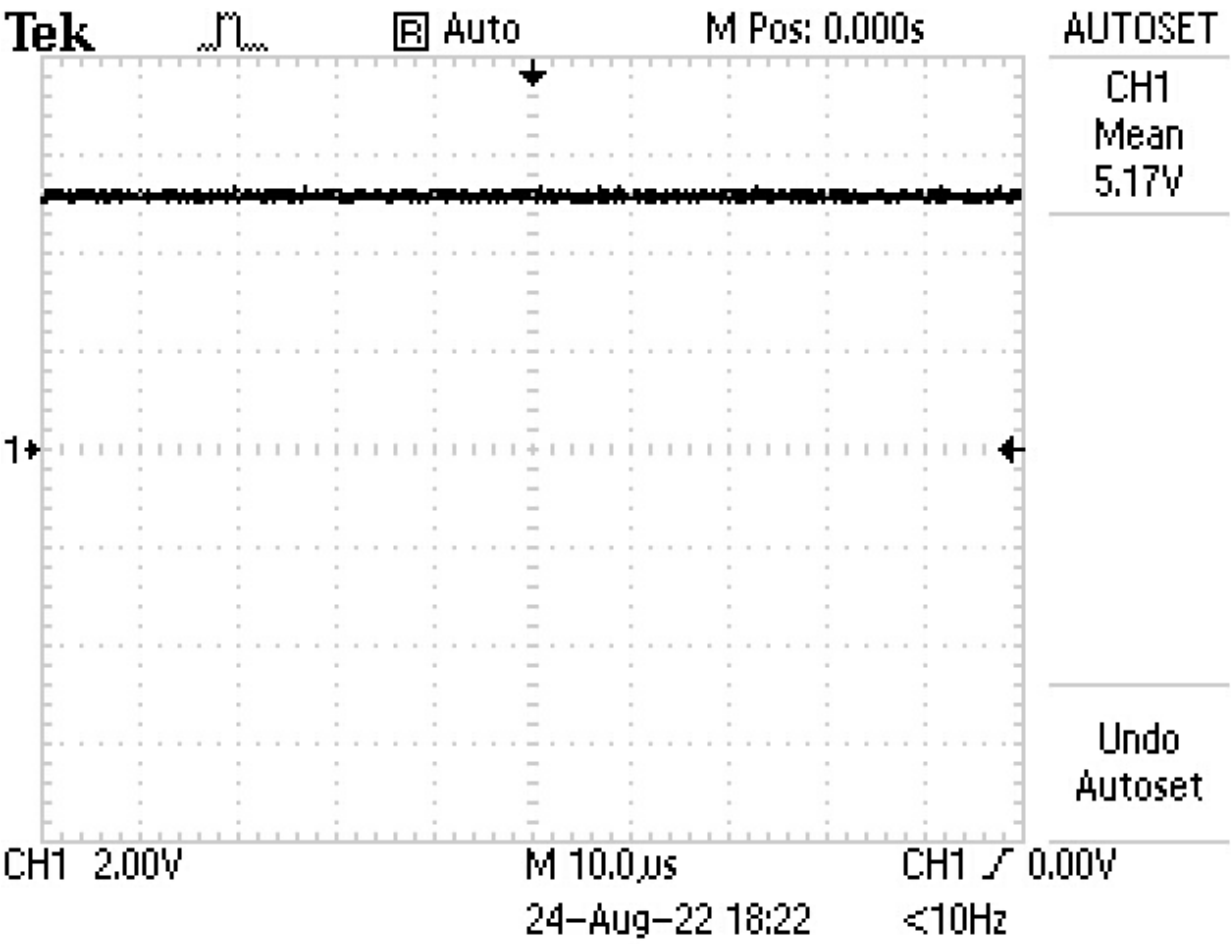

Figure 3.1: Measured output of voltage regulator

3.2. Current sensor

3.2.1. Simulation

A max current of 1.5A has been measured from stalling the given motor and 250mA from running. We evaluate the step input of the circuit in figure 3.2 and see that we have a small voltage through Rsense that is directly proportional to the current through Rsense.

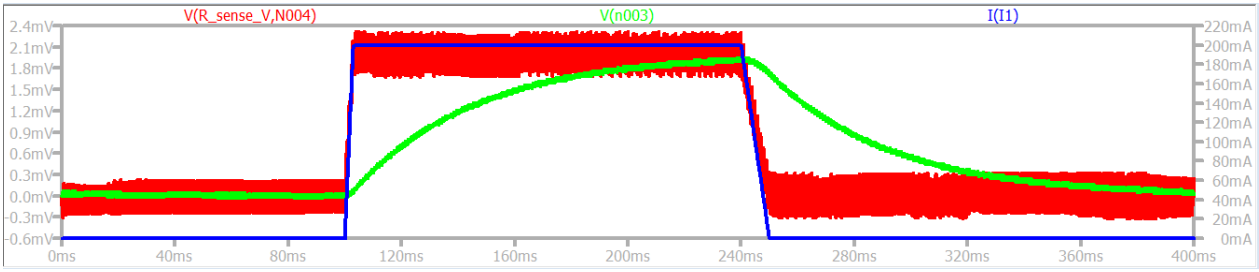

Figure 3.2: Step input of circuit

We also see a filtered response, in green, from the RC filter with a voltage of less than 250 mV and a rise time of less than 100 ms from 0-90 %.

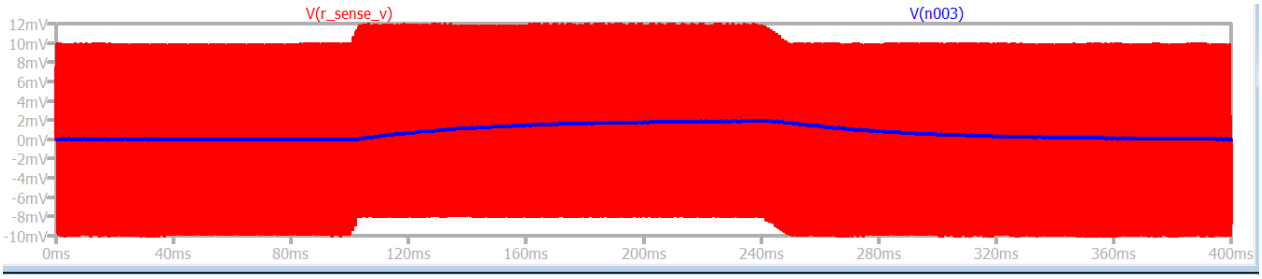

Figure 3.3: Noise at the input of filter vs noise after filter

The noise is greatly reduced after the RC filter as seen in figure 3.3.

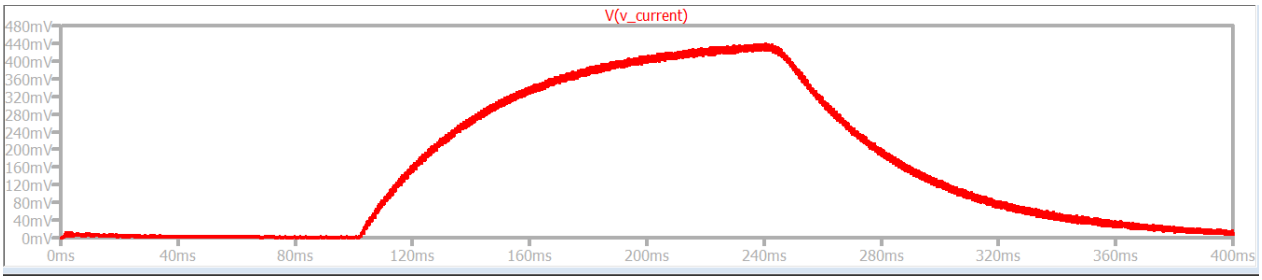

Figure 3.4: Final output of system

We see an amplified version of our input from figure 3.2 with a gain of 220.

3.2.2. Measured results

The circuit response was measured in different states namely running,stall,slight load and 0 current.

A general range of the results are given in the table below.

Table 3.1: Results

	V_{out} [V]	I_{motor} [mA]
Running	1.0-1.1	150-170
Stall	3.3	1200-1300
Slight load	0.6-0.7	100-110
0	0	0

The circuit yields similar results to what was simulated in LTspice with slight deviation which could be caused by varying environmental temperatures, long wires and components not being the exact values.

3.3. Ultrasonic sensor

3.3.1. Simulation

The following results were obtained from simulation using the circuit design from figure 2.4.

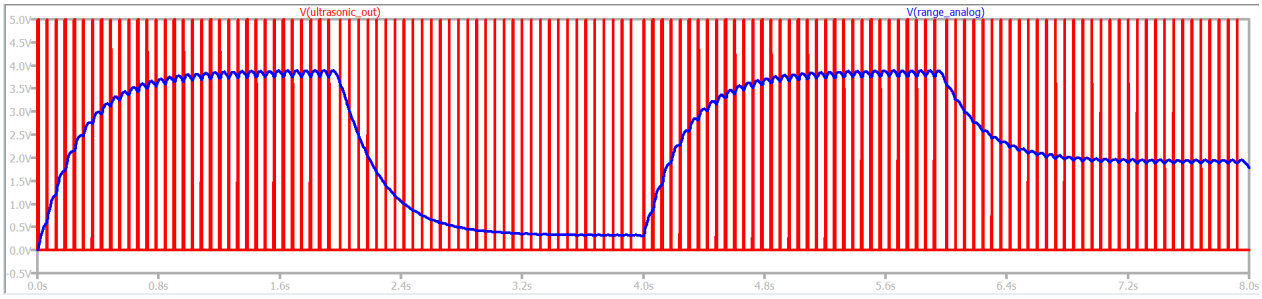

Figure 3.5: Simulation results for PWM to analog

The blue trace is the analog output signal and the red trace is the ultrasonic echo signal. Between 0 and 2s we have a echo signal with a pulse width of 6ms which corresponds to an object at about 1m. The corresponding filtered DC analog signal between 0-2s has a mean of about 3.7V and a satisfactory rise time reaching the max value well within 1.5s. The pulse width then changes to 0.5ms after 2s whic represents an object at close. We see the analog signal start to drop and stabilise at around 0.4V. The circuit further behaves quite satisfactorily for different pulse widths with values falling within user requirements.

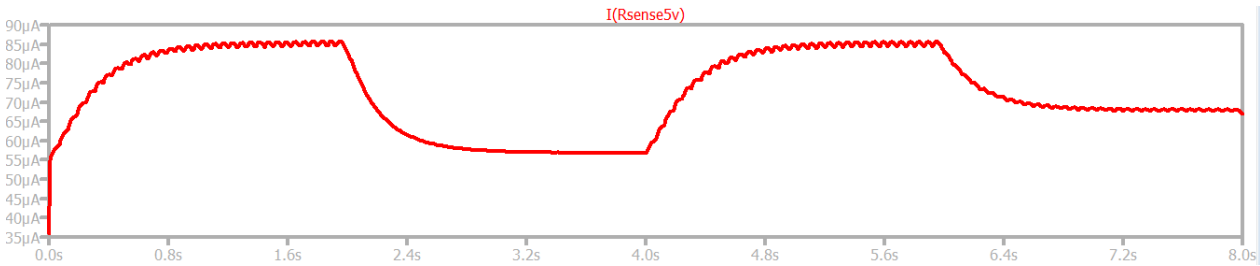

Figure 3.6: Current usage of our PWM to analog circuit

Here we see that our circuit uses less than 750 µA

3.3.2. Measurements

The following results were obtained by building the physical circuit and measuring using an actual object. The readings were obtained via an oscilloscope that measured the echo pin of the ultrasonic sensor and a multimeter that read the analog output of the PWM to analog signal.

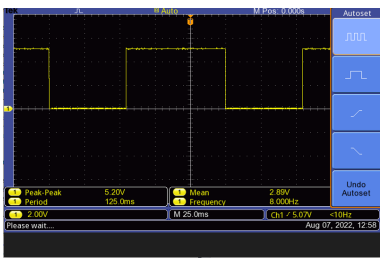

(a) No object placed

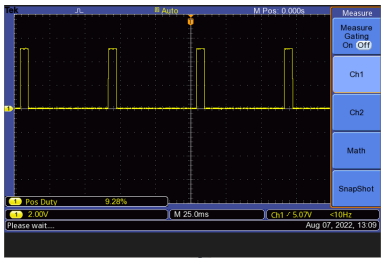

(b) object at 1m

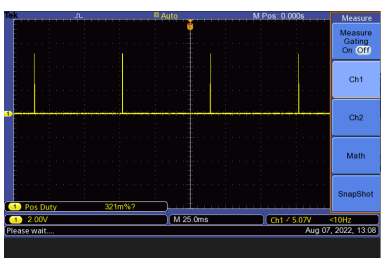

(c) object at 1cm

Table 3.2: Results for PWM to analog

Input distance [Distance	Output on multimeter [V]
No object	5.02-5.05
object at 1m	3.30-3.32
object at 1cm	0.06-0.08

The measured results correspond with the simulated results and are thus satisfactorily.

3.4. DAC

3.4.1. Simulation

The following results were obtained through simulation.

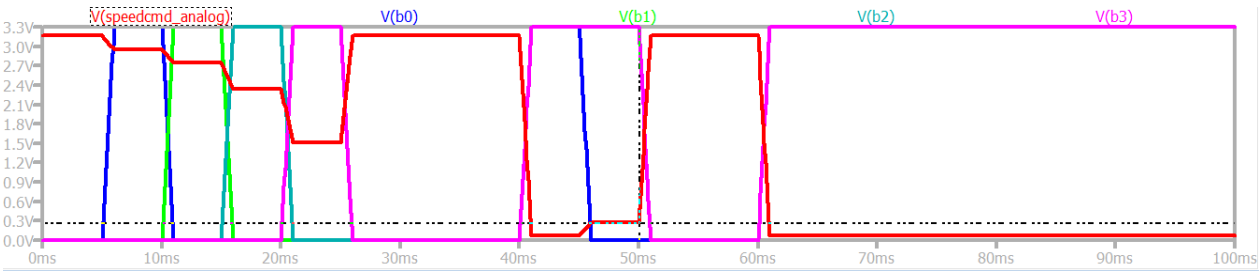

Figure 3.8: Analogue voltage vs Digital input

The red trace represents the analogue output and the other traces represents the binary input. We see that at an initial binary input of 0000 we have a max voltage of approximately 3.2V and for a input of 1111 approximately 0V The following results were obtained for different binary inputs.

Table 3.3: Results for DAC

Input [Binary]	Output [V]
0000	3.2
0001	2.95
0010	2.75
0100	2.33
1000	1.5
1110	0.275
1111	0.069

The following current draw was taken from the sense resistor. The circuit draws a max of 114 µA

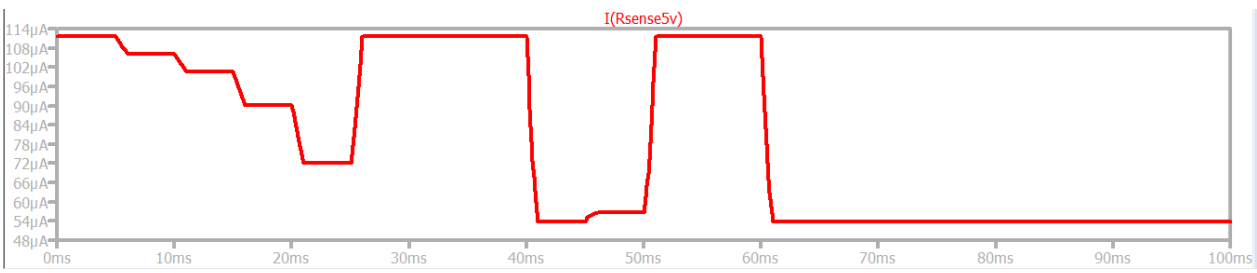

Figure 3.9: Current usage of DAC

3.4.2. Measurements

The following results were obtained from multimeter measurements from the physical circuit at the output of the DAC.

Table 3.4: Results for DAC

Input [Binary]	Output [V]
0000	3.3
0001	3.06
0010	2.83
0011	2.57
0100	2.33
1000	1.6
0111	1.69
1110	0.28
1111	0.12

The results closely resemble the simulated results. The differences are caused by tolerances of the resistors and the gain being adjusted by the variable gain resistor.

3.5. Motor Control

3.5.1. Simulation

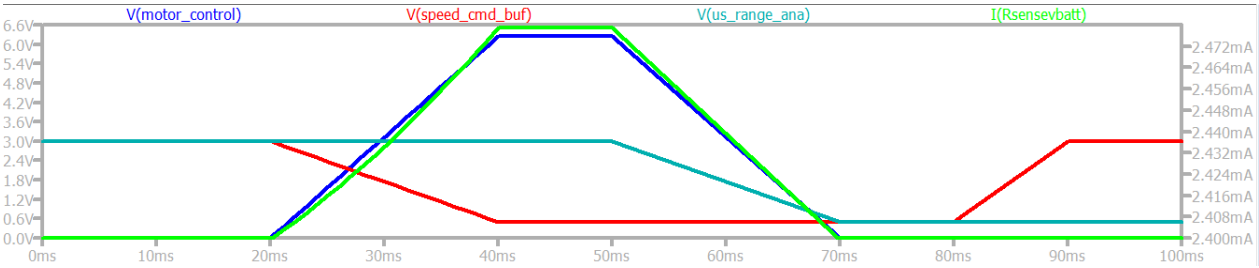

Figure 3.10: Motor control differential amplifier results

We see the results fit the requirements well. When the object is far(high voltage on light blue trace) and the input command is low(high voltage red trace) we get a low voltage output to the motor. However as the speed input is increased(low voltage on red trace) with no object in range the motor voltage also increases. As an object gets closer in range the motor voltage decreases correspondingly. The highest current output from the circuit is 2.5mA. THis is not enough to drive the motor.

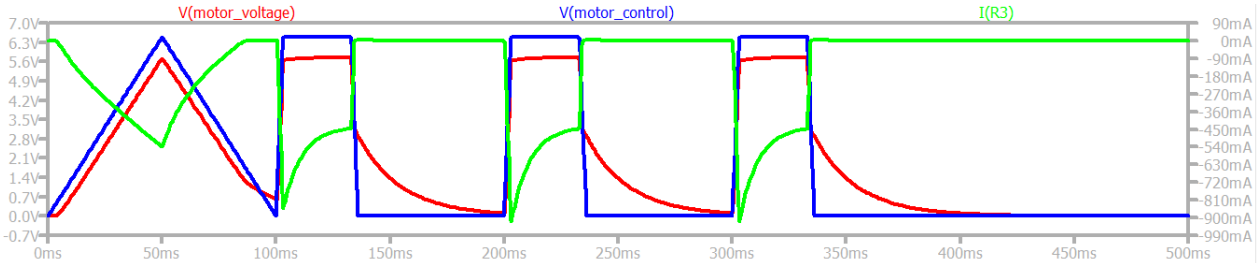

Figure 3.11: Emitter follower

The voltage drop over the base emitter causes a slight drop of about 0.6V in the output. However the output current to the motor is much higher as seen from the green trace, high enough to drive the motor.

3.5.2. Measurements

A toolbox was used as an object and the distance between object and sensors were varied. The input speed was also fed into the circuit by a 4 bit DIP switch.

Table 3.5: Results for right motor control

Input speed [Binary]	Distance of object [m]	motor voltage [V]
0000	1	0.00
1000	1	3.45
1000	0.050	0.91
1000	0.010	0.00
1100	0.050	2.24
1100	1	5.79

3.6. Left wheel

3.6.1. Simulation

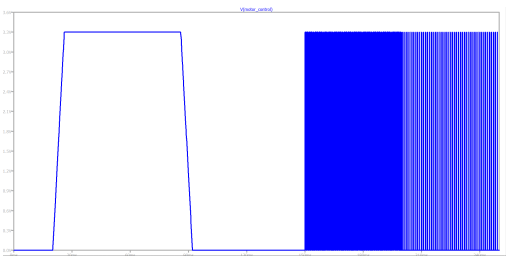

(a) PWM motor control signal

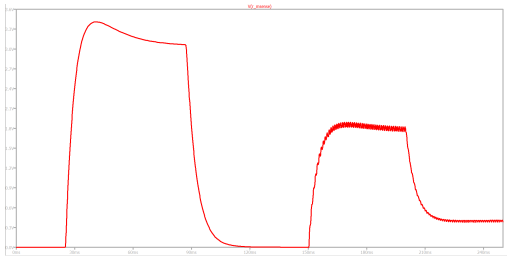

(b) Voltage over motor

3.6.2. Measurements

The following measurements were obtained through multimeter readings over the motor voltage.

Table 3.6: Results for left motor control

Input speed [Binary]	Distance of object [m]	motor voltage [V]
0000	>1	0.00
1000	>1	1.69
1000	0.050	0.78
1100	0.010	0.00
1100	0.050	1.93
1100	1	5.12

The motor voltage decreased as the distance is decreased and increased with an increase in distance and inout speed.

3.7. Battery Charger

3.7.1. Simulation

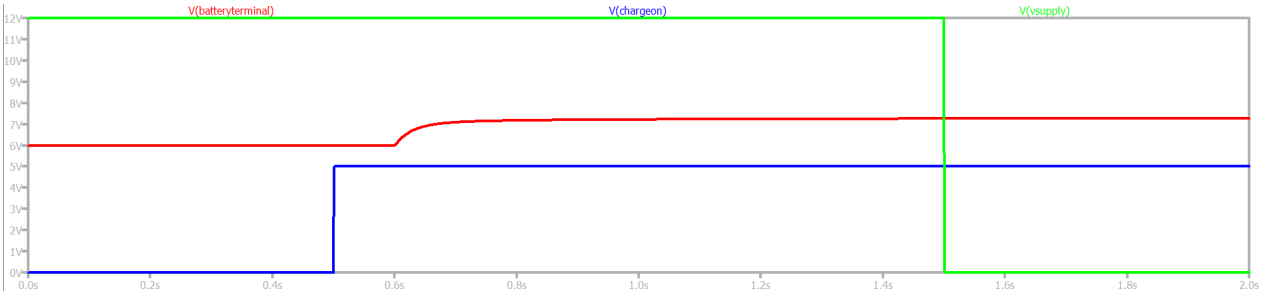

Figure 3.13: Battery Charger results from simulation

3.7.2. Measurements

The battery charger circuit was tested using a 50 Ω simulating a high current and low battery capacity and 1 kΩ simulating a low current and high battery capacity. The output of the battery charger circuti was measured via multimeter.

Table 3.7: Results for battery charger

High current / low battery capacity [V]	Low current / High battery capacity [V]
7.01	6.61

The results are satisfactory. The output is lower at a higher battery capacity and higher at a low battery capacity.

3.8. Under-voltage protection

3.8.1. Simulation

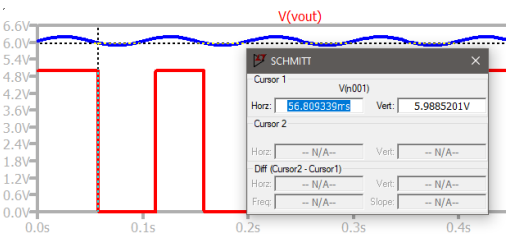

(a) Digital LOW at lower than 6V

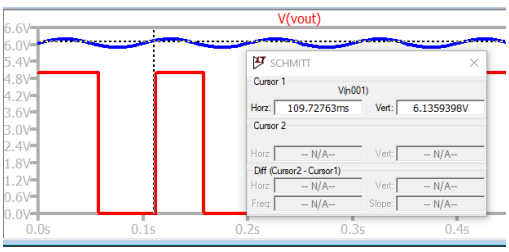

(b) Digital HIGH at bigger than 6.1V

3.8.2. Measurements

The output of the under-voltage circuit was measured via multimeter while a power supply was used to emulate the battery voltage at the input. The input was first increased from 5.8V to 6.1V

Table 3.8: Results for under-voltage protection

Battery voltage [V]	Output [V]
5.9	0.00
6.0	0.00
6.1	4.99

The input was now decreased from 6.1V to 5.9V.

Table 3.9: Results for under-voltage protection

Battery voltage [V]	Output [V]
6.1	4.99
6.0	4.99
5.9	0.00

The schmitt trigger with the MOSFETS succeeded in turning off the motor voltage when the battery voltage goes under 6.0V and succeeded in turning on the motor voltage when the battery voltage is over 6.1V again.

3.9. Battery voltage signal conditioning

3.10. Firmware

Chapter 4

Physical implementation

4.1. Current sense circuit

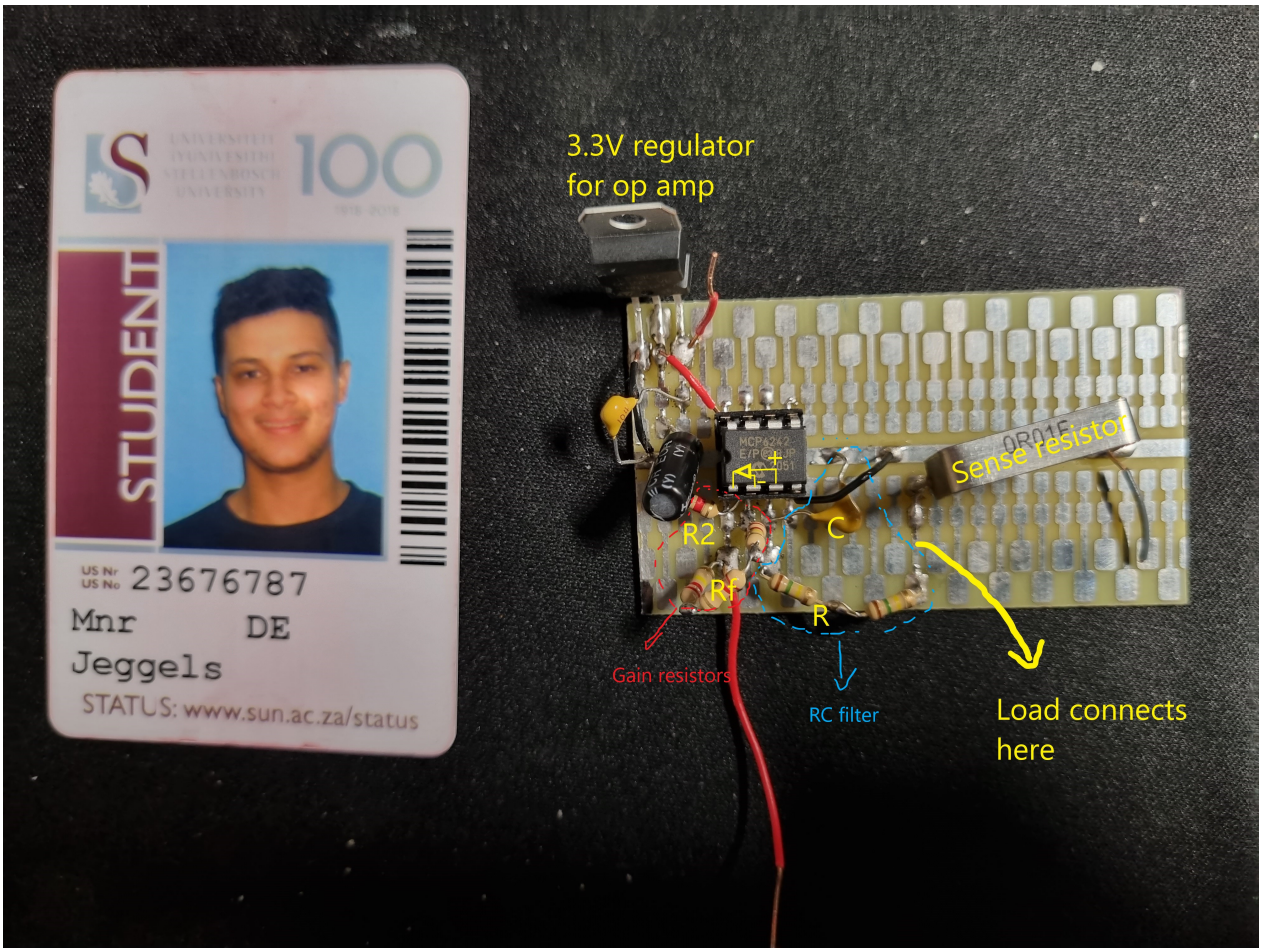

Figure 4.1: Physical circuit implementation Current sense

Component labels refer to figure 2.2

4.2. Ultrasonic signal conditioning

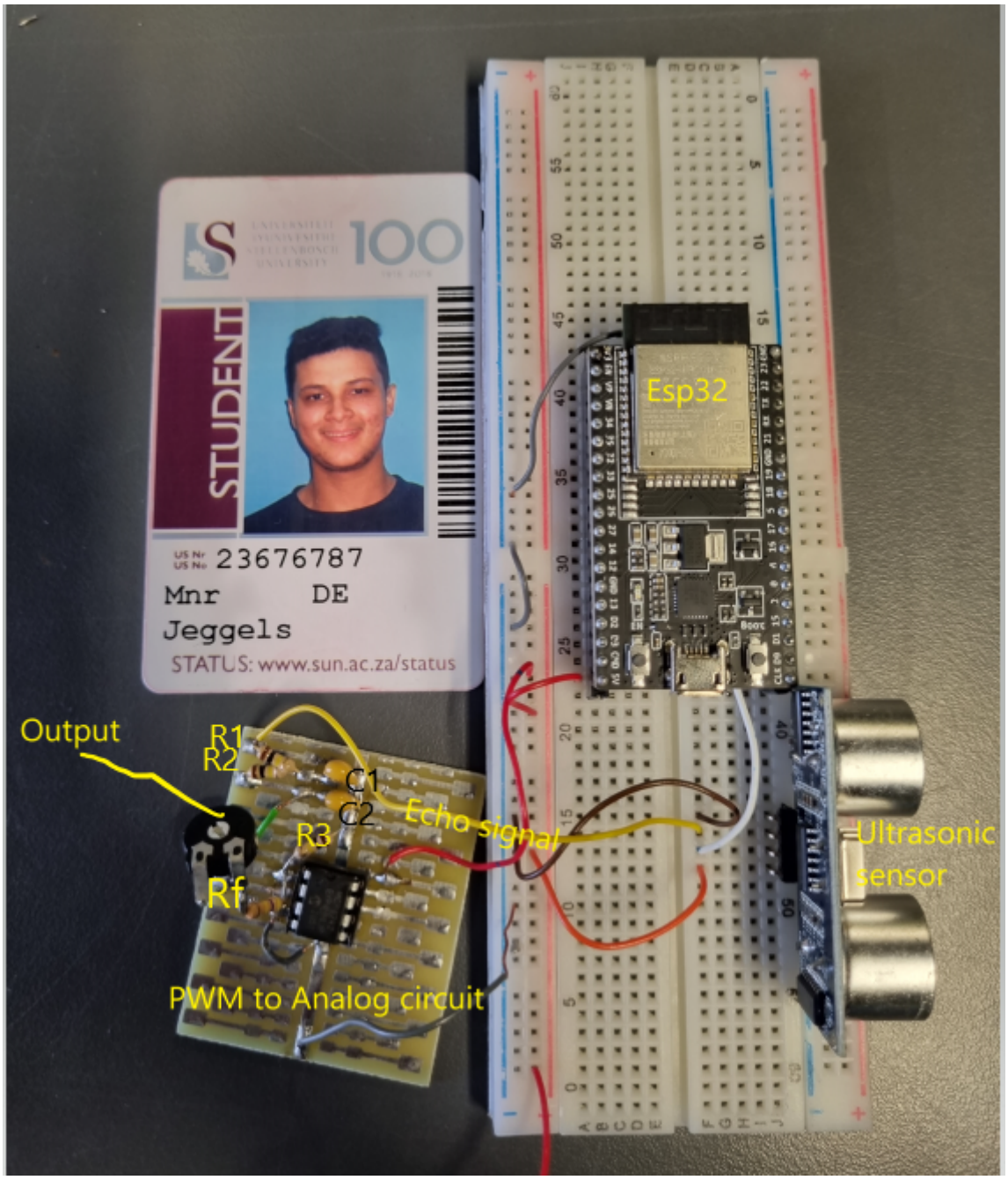

Figure 4.2: Physical circuit implementation Ultrasonic signal conditioning

Component labels refer to figure 2.4

4.3. DAC

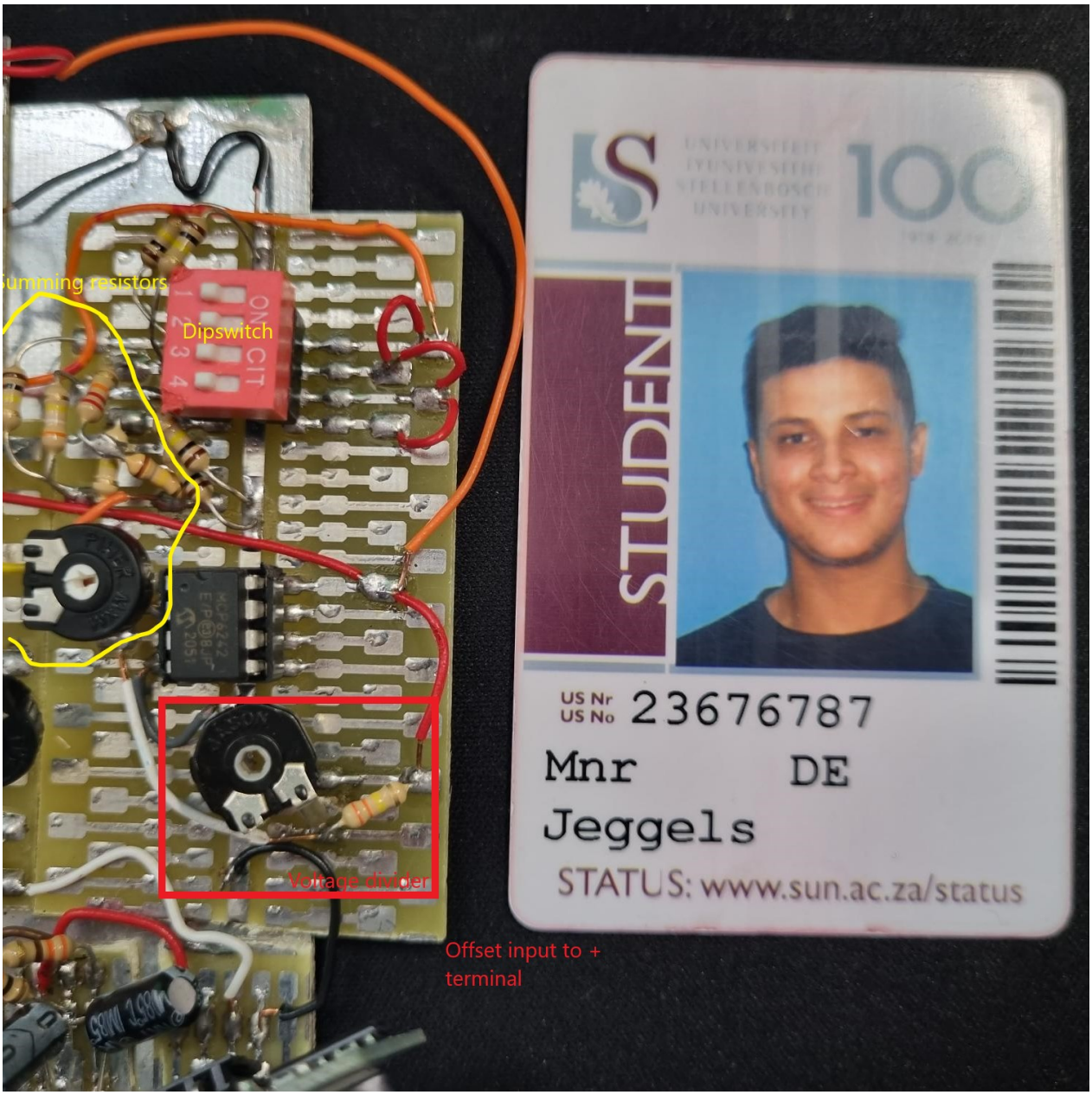

Figure 4.3: Physical circuit implementation DAC

4.4. Final right wheel circuit

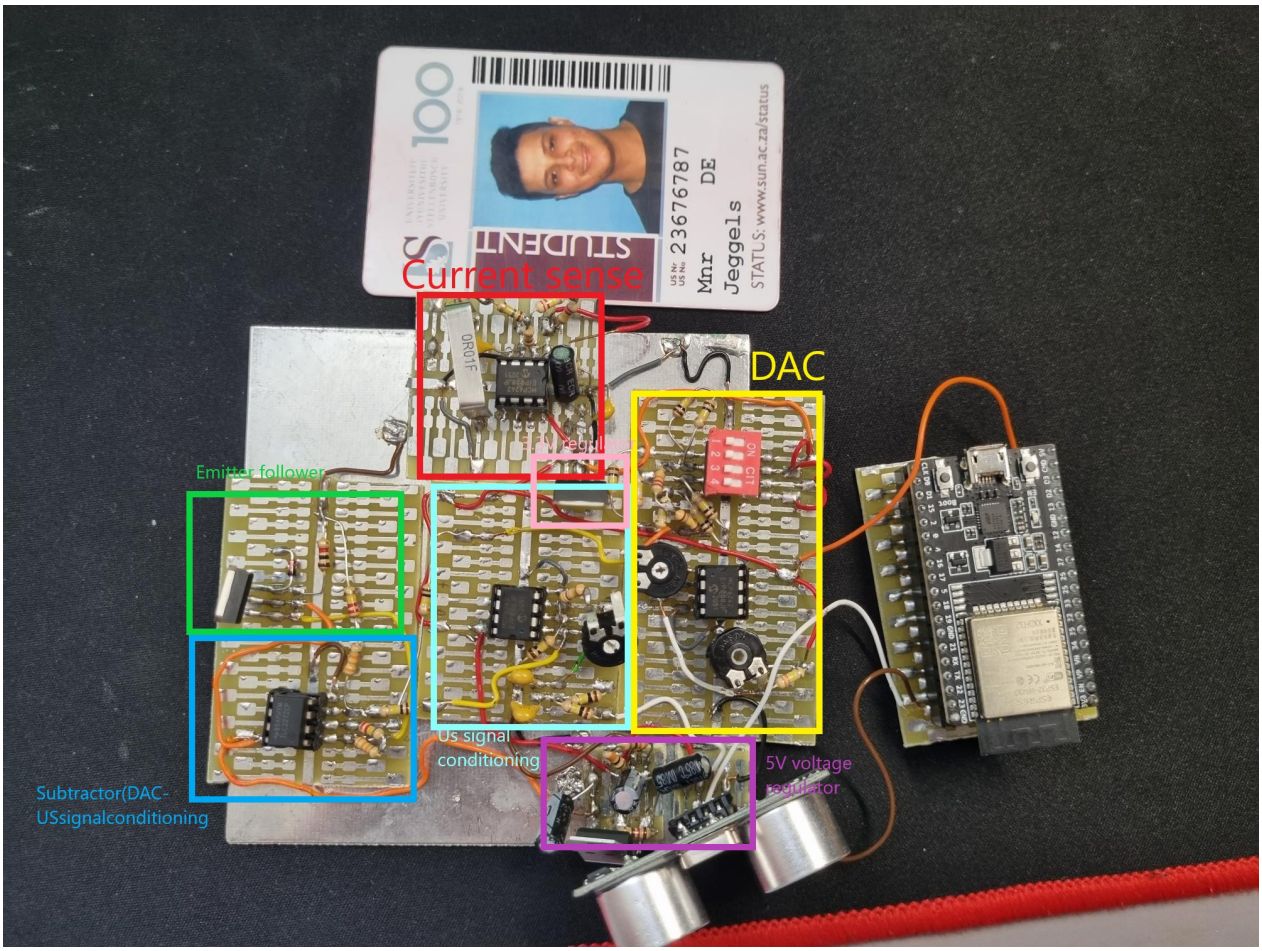

Figure 4.4: Physical circuit implementation Right wheel

Bibliography

[1] Microchip Technology, "Mcp6242-ep," 2008. [Online]. Available: www.microchip.com

[2] W. Storr, "Basic electronics tutorials site," *Website (http://www. electronics-tutorials. ws)*, 2013.

[3] A. Palacherla, "Using pwm to generate analog output," *Microchip Inc. Application Note, AN538*, 1997.

[4] (NaN) Sen-15569 sparkfun electronics $|developmentboards, kits, programmers|digikey.[Online].Available$

(NaN) (10) electrical engineering: Ch 5: Operational amp (23 of 28) digital to analog (d to a) converter - youtube. [Online]. Available: https://www.youtube.com/watch?v=CiXjZ2lo1Fw

alldatasheet.com. (NaN) Ld1117 datasheet(pdf) - stmicroelectronics. [Online]. Available: https://www.alldatasheet.com/datasheet-pdf/pdf/94381/STMICROELECTRONICS/LD1117.html

(NaN) Method for converting a pwm output to an analog output when using hall effect sensor ics. [Online]. Available: https://www.allegromicro.com/en/insights-and-innovations/technical-documents/hall-effect-sensor-ic-publications/method-for-converting-a-pwm-output-to-an-analog-output-when-using-hall-effect-sensor-i

W. Storr. (NaN) Differential amplifier - the voltage subtractor. [Online]. Available: https://www.electronics-tutorials.ws/opamp/opamp_5.html

(NaN) Tlc2272 data sheet, product information and support $|ti.com.[Online].Available$:

(NaN) How to build an emitter follower circuit. [Online]. Available: http://www.learningaboutelectronics.com/Articles/Emitter-follower-circuit.php

alldatasheet.com. (NaN) Fqu13n06ltu datasheet(pdf) - fairchild semiconductor. [Online]. Available: https://www.alldatasheet.com/datasheet-pdf/pdf/602446/FAIRCHILD/FQU13N06LTU.html

(NaN) Schmitt trigger - wikipedia. [Online]. Available: https://en.wikipedia.org/wiki/Schmitt_trigger

(NaN) Schmitt trigger: What is it and how does it work? (circuit diagrams included) $|electrical4u.[Online].Available$:

Appendix A

Social contract

UNIVERSITEIT•STELLENBOSCH•UNIVERSITY
jou kennisvennoot • your knowledge partner

E-design 344 Social Contract

2022

The purpose of this document is to establish commitment between the student and the organisers of E344. Beyond the commitment made here, it is not binding.

In the months preceeding the term, the lecturer (Thinus Booysen) and a few paid helpers (Rita van der Walt, Keegan Hull, and Michael Ritchie) spent countless hours to prepare for E344 to ensure that you get your money's worth, that you are enabled to learn from the module, and demonstrate and be assessed on your skills. We commit to prepare the assignments, to set the assessments fairly, to be reasonably available, and to provide feedback and support as best and fast we can. We will work hard to give you the best opportunity to learn from and pass analogue electronic design E344.

I, Dean Jeggels ..... have registered for E344 of my own volition with the intention to learn of and be assessed on the principals of analogue electronic design. Despite the potential publication online of supplementary videos on specific topics, I acknowledge that I am expected to attend the scheduled lectures to make the most of these appointments and learning opportunities. Moreover, I realise I am expected to spend the additional requisite number of hours on E344 as specified in the yearbook.

I acknowledge that E344 is an important part of my journey to becoming a professional engineer, and that my conduct should be reflective thereof. This includes doing and submitting my own work, working hard, starting on time, and assimilating as much information as possible. It also includes showing respect towards the University's equipment, staff, and their time.

Prof. MJ (Thinus) Booysen

Signature: MJ Booysen Digitally signed by MJ Booysen Date: 2022.07.02 13:22:09 +02'00' .....

Date: 1 July 2022 .....

Student number: 23676787 .....

Signature: Dlaggels .....

Date: 22 July 2022 .....

1

Appendix B

GitHub Activity Heatmap