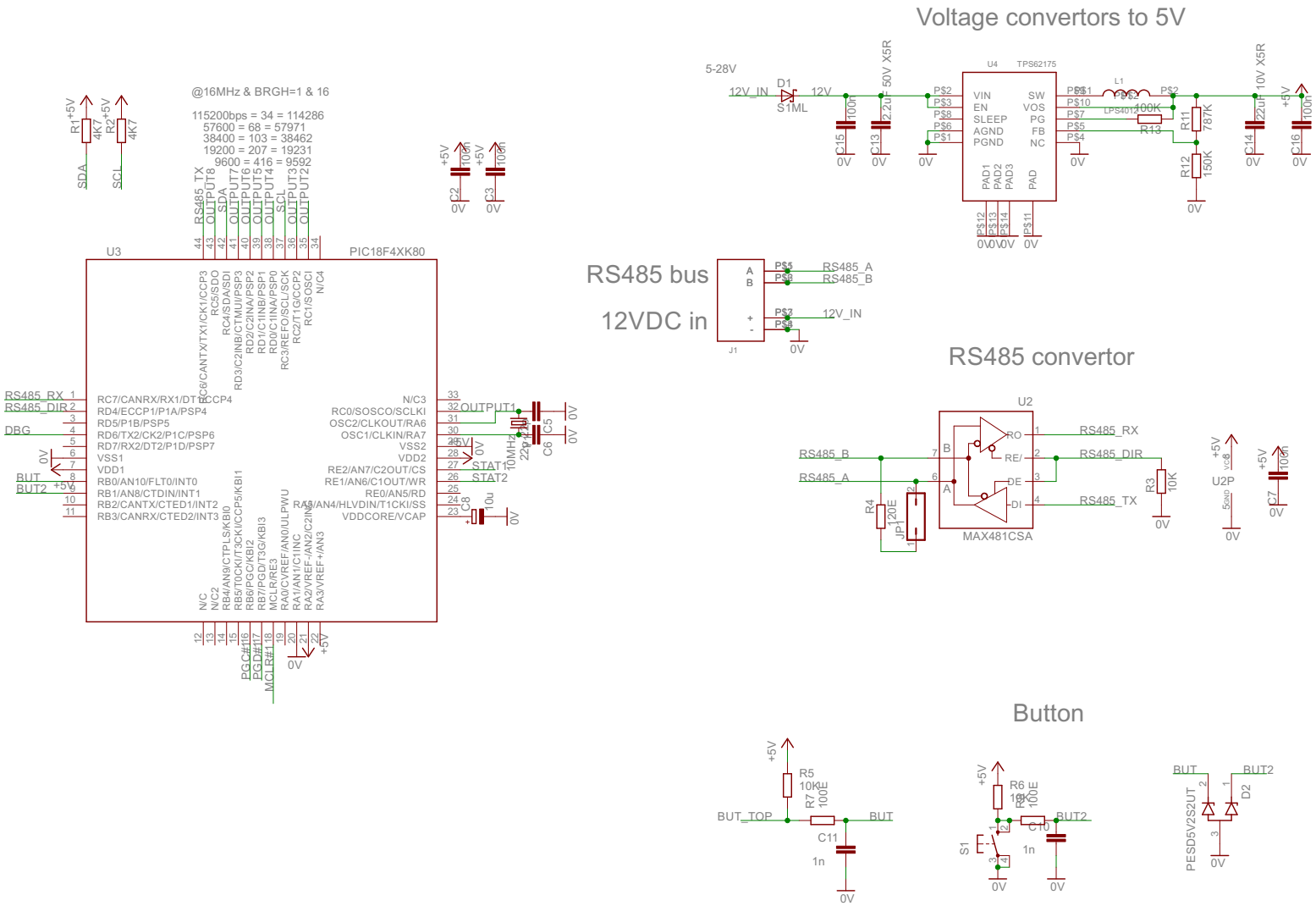

Project : OpenMotics
Designer : Niko Vinken

CC BY-SA 4.0 License
NAME: OpenMotics
YEAR: 2015

OSHW LOGO

TITLE: OMHRS_3_2

Document Number:
Module : relais controle 8 ports, based on input module

REV:

Date: 2016-02-09 09:49:49

Sheet: 1/2