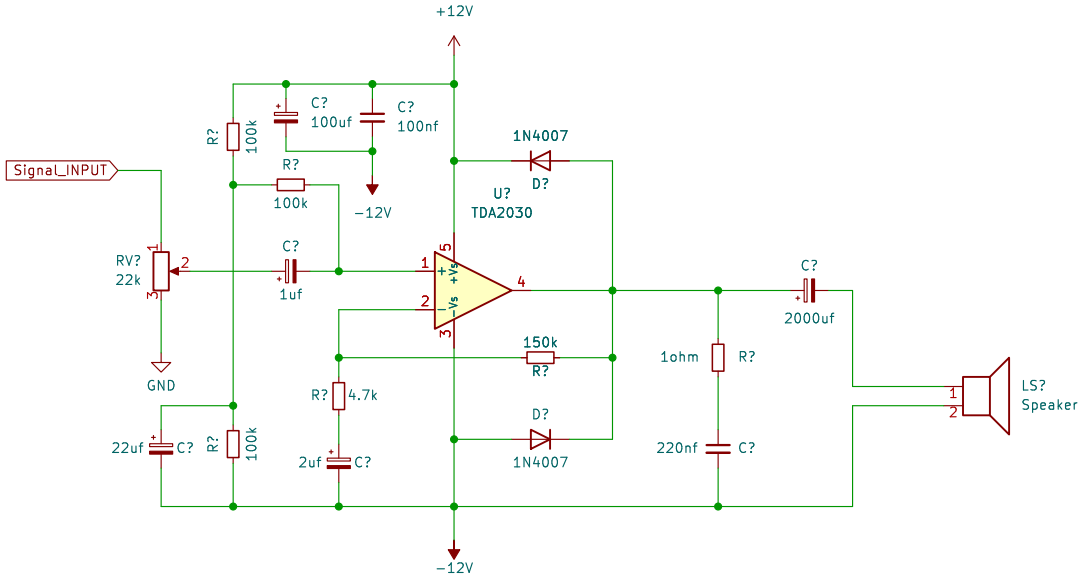

AUTHOR NAME – Debraj Das

SPECIFIC_ELECTRONICS

Sheet: /

File: 2.1_Audio_TDA2030_circuit_Diagram.kicad_sch

Title: TDA_2030_CIRCUIT_DIAGRAM

Size: A5	Date:	**Rev:**
KiCad E.D.A. kicad (7.0.0)		Id: 1/1