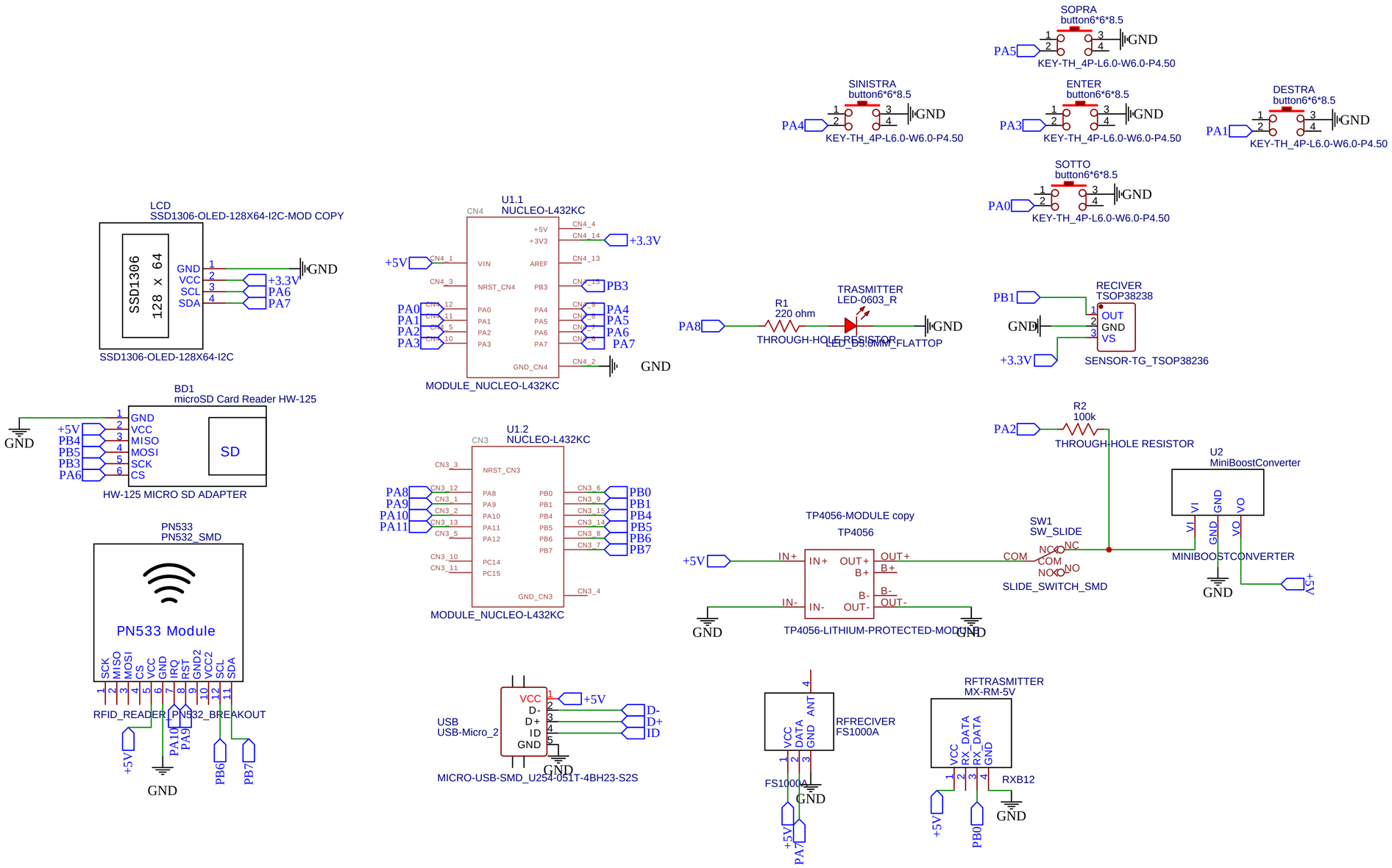

TITLE: Flopper Ziro	REV: 1.0
Company: Techlaton	Sheet: 1/1
Date: 2022-09-11 Drawn By: iraton	