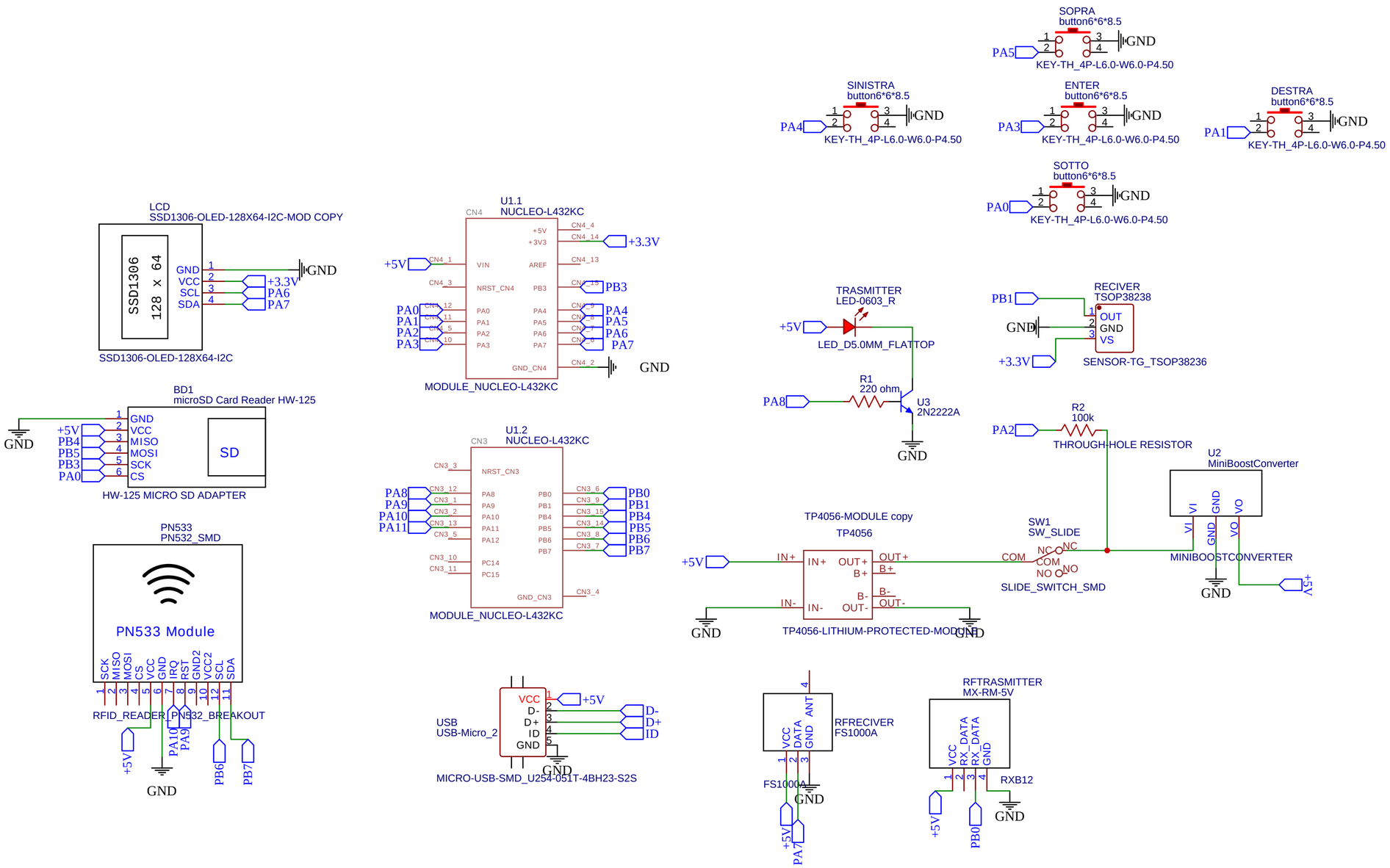

TITLE: Flopper Ziro	REV: 1.1
Company: Techlaton	Sheet: 1/1
Date: 2024-01-12 Drawn By: iraton	