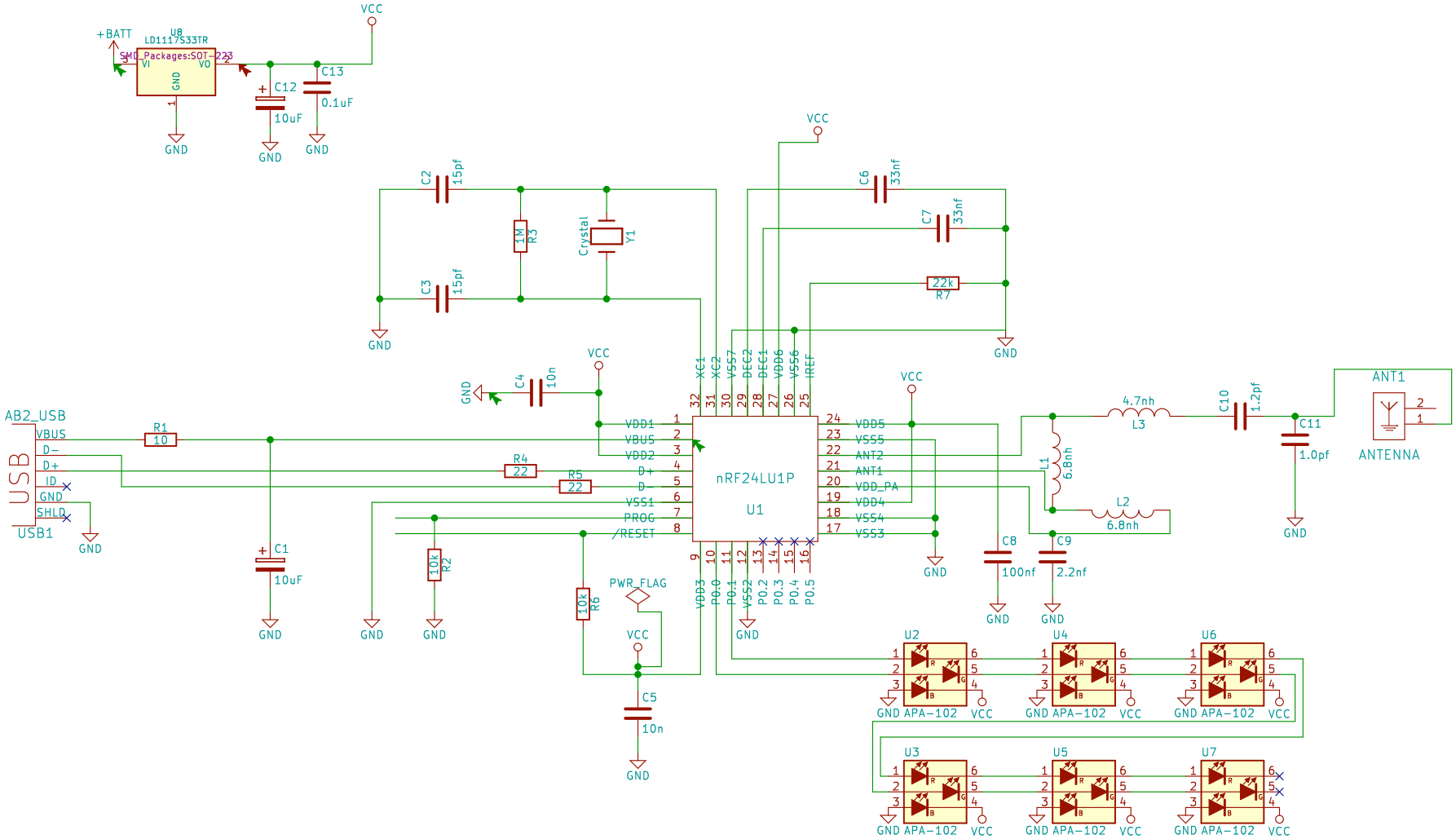

Sheet: /
File: LEDPendant.sch

Title:

Size: A4	Date:	Rev:
KiCad E.D.A. kicad (2015-05-23 BZR 5679)-product		Id: 1/1