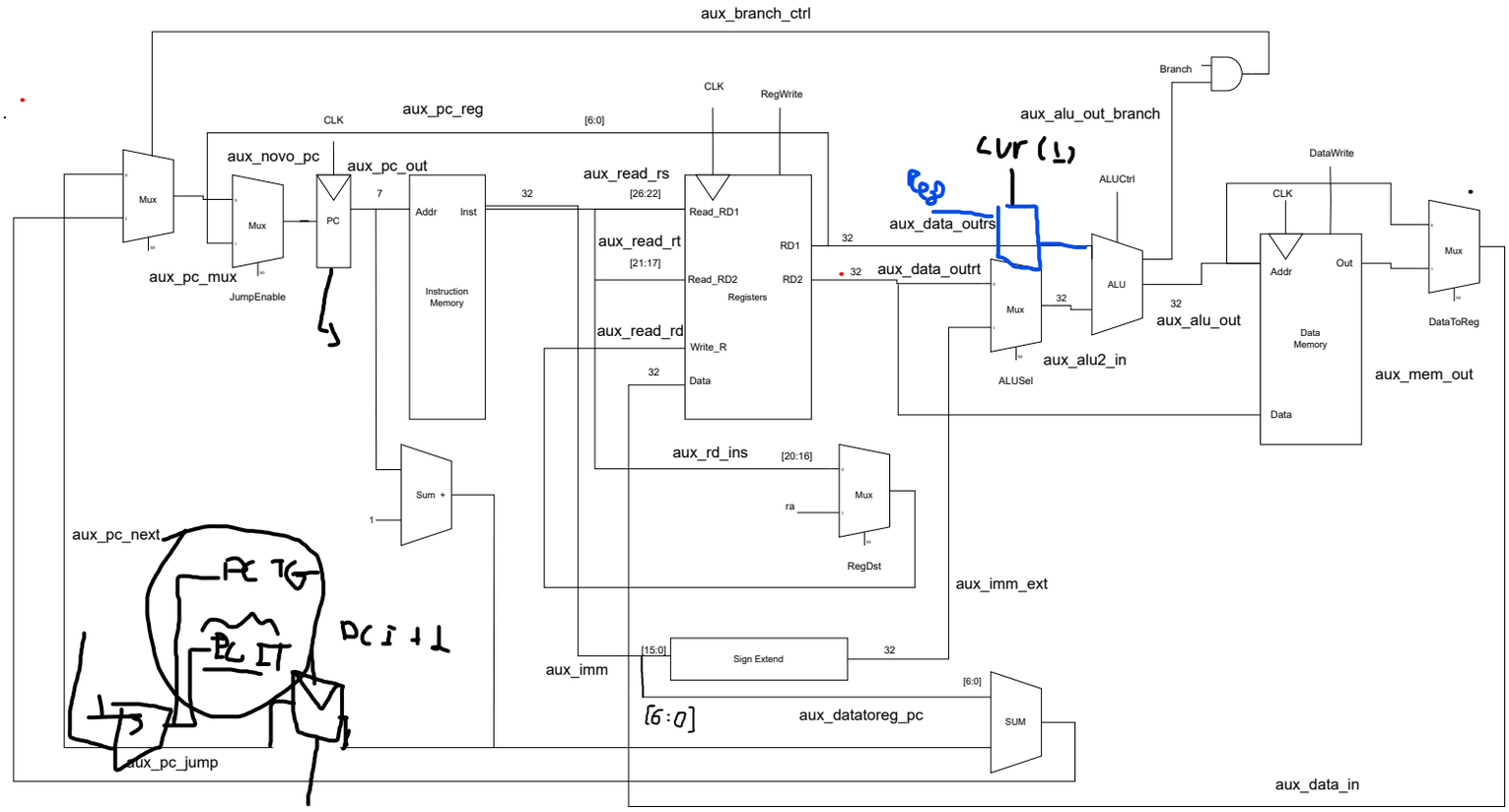

WE →

{ ADDR

Active all interrupts → Enable

Active Overflow Interrupt

Active GPIO Interrupt

Int_mask

8

2

Int_request

Indicate that Overflow Interrupt occurred

Indicate that a GPIO Interrupt occurred