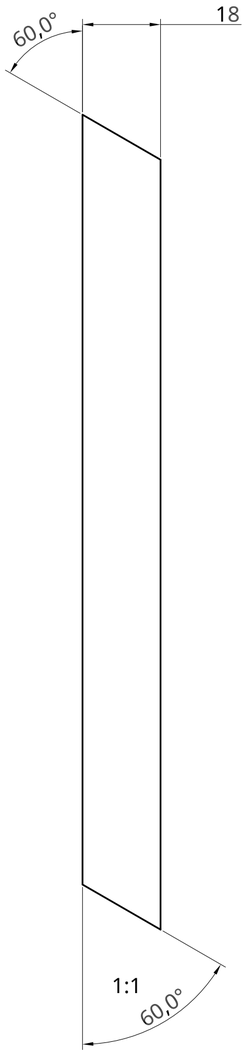

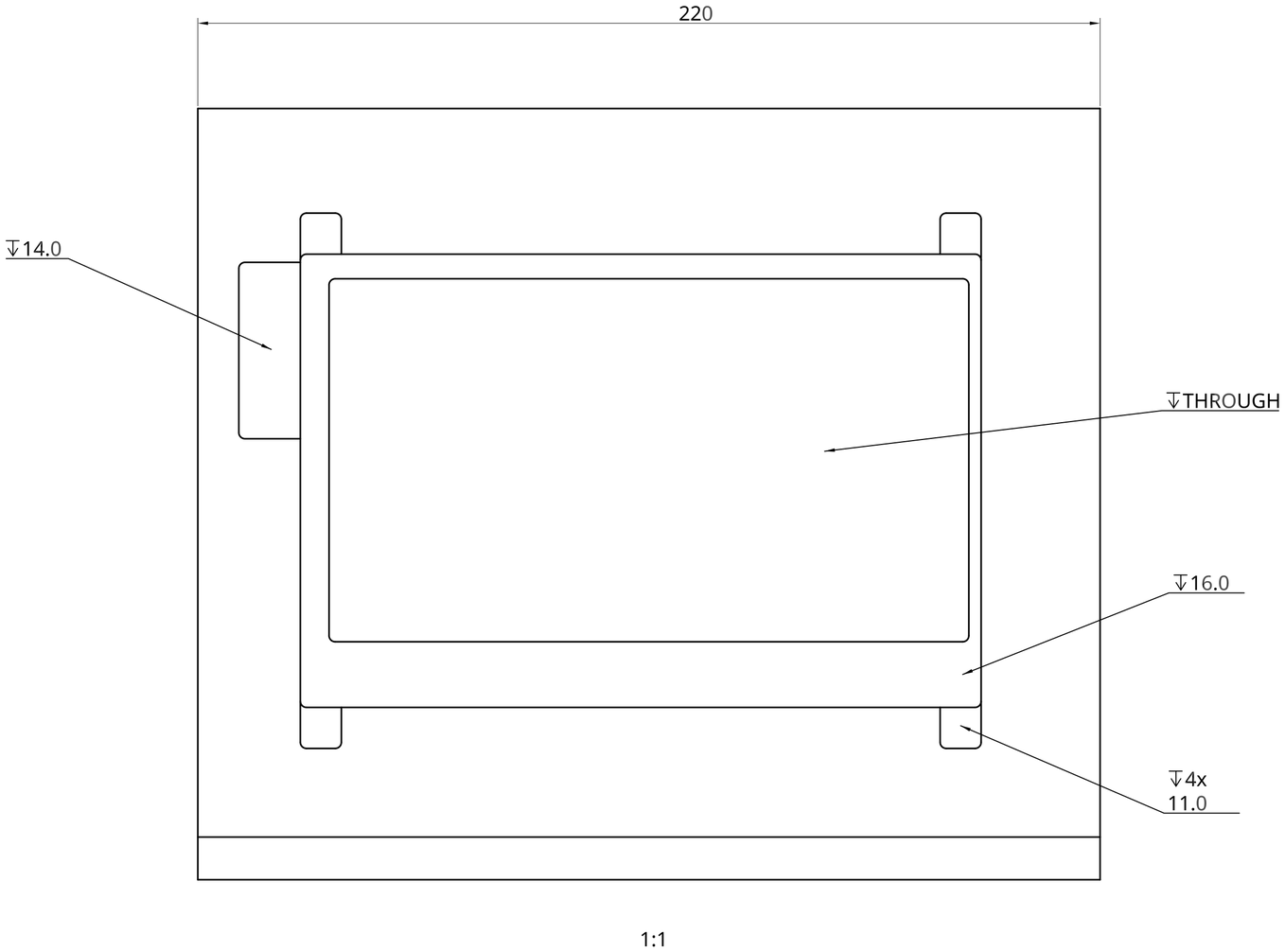

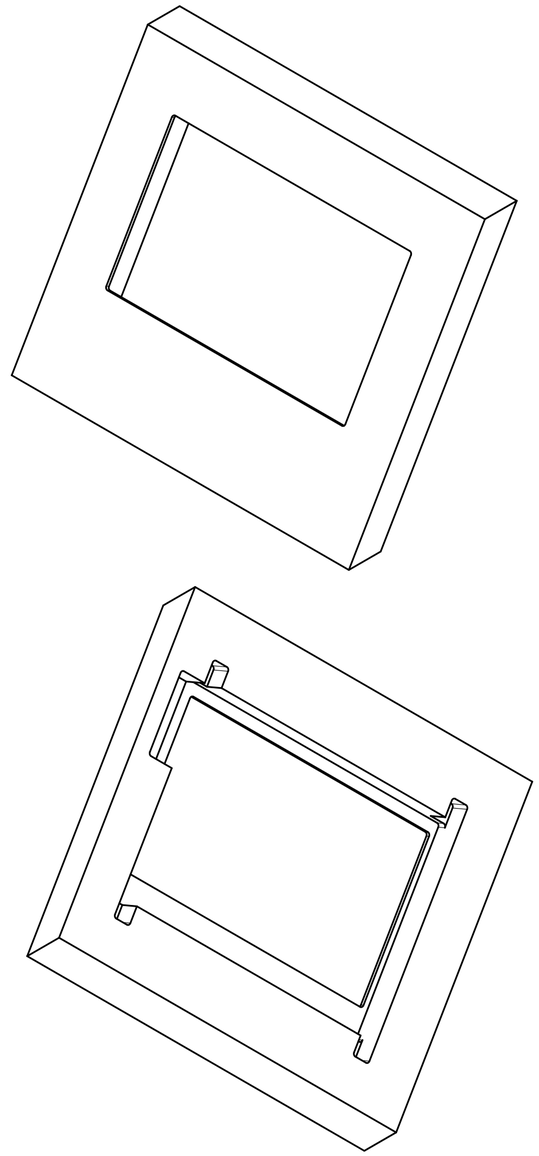

Note: designed for ∅3mm mill bit, was done with a 6mm bit: some corners have to be 'cut out' for the display to fit, make sure to check 3D parts and/or estlcam files

UNLESS OTHERWISE SPECIFIED, DIMENSIONS ARE IN MILLIMETERS		NAME	SIGNATURE	DATE	
	DRAWN	DAMIAN SCHNEIDER		2020-02-16	
	CHECKED				TITLE Volumio Case
	APPROVED				
DO NOT SCALE DRAWING					
BREAK ALL SHARP EDGES AND REMOVE BURRS					
FIRST ANGLE PROJECTION	MATERIAL Wood (Oak)		FINISH		SIZE A2 / DWG NO. / REV.
					SCALE 1:2 / WEIGHT / SHEET 1 of 4

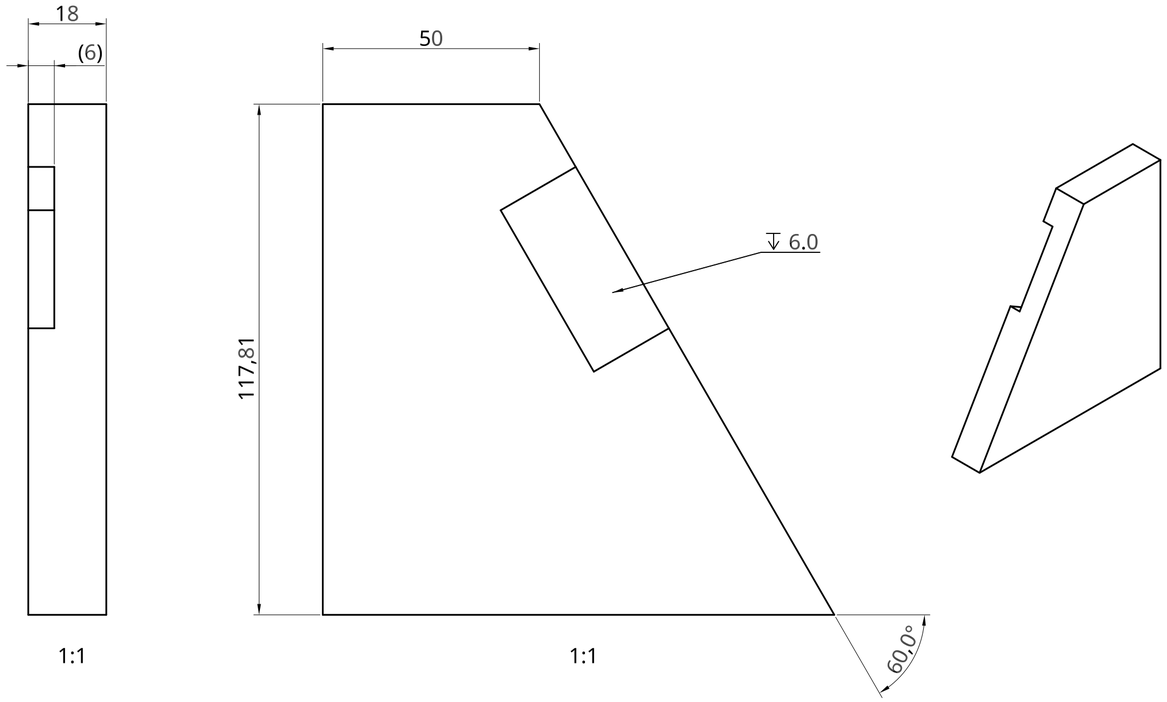

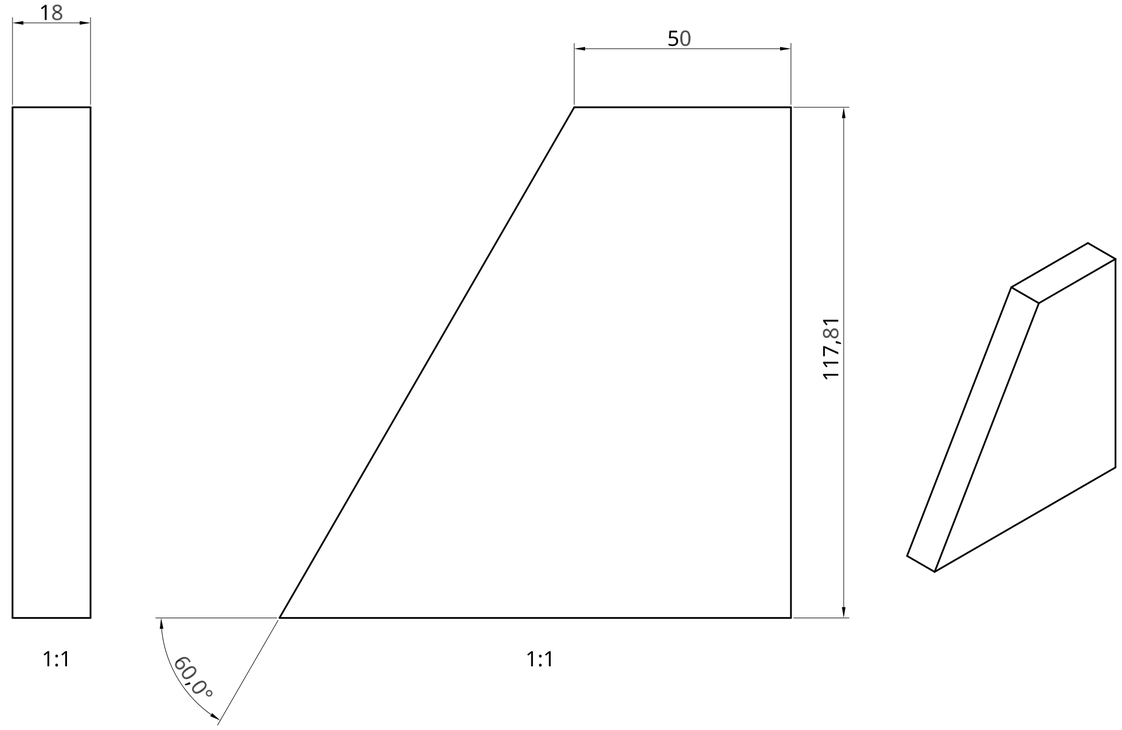

DWG NO.	SIZE	SCALE	SHEET	REV.
	A2	1:2	2 of 4	

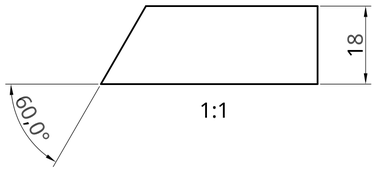

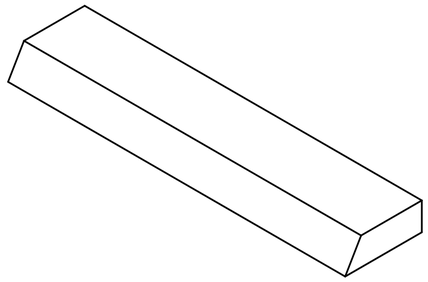

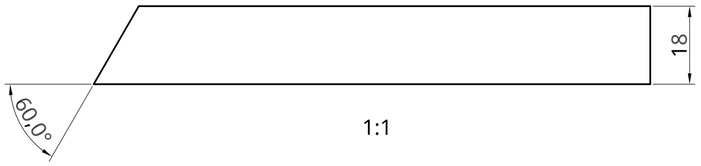

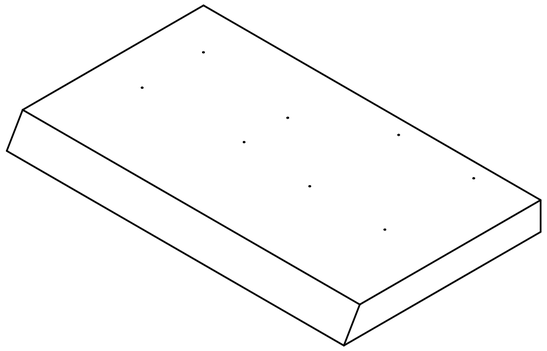

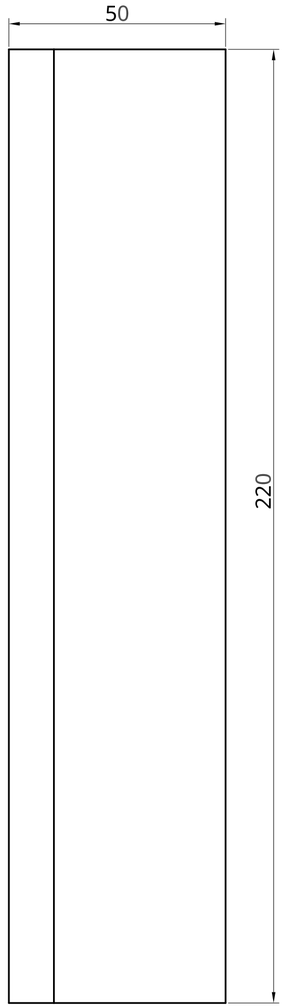

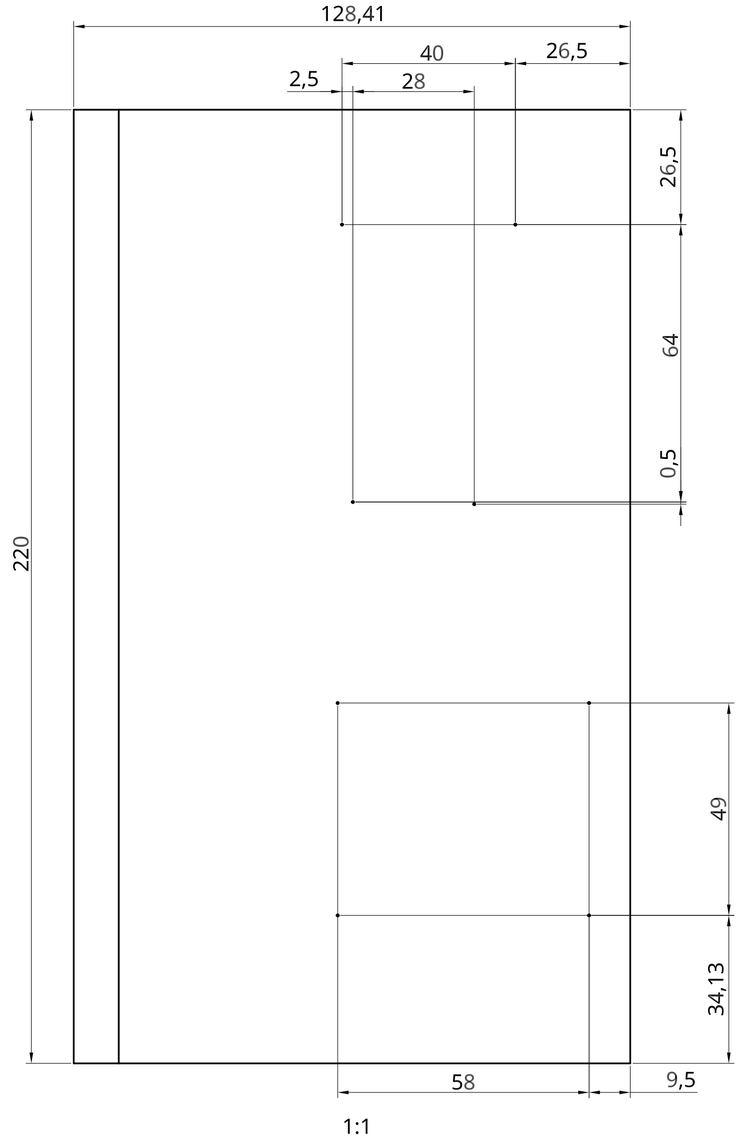

ES9018K2M DAC board, hole size and depth TBD by user

Raspberry Pi, hole size and depth TBD by user

DWG NO.	SIZE	SCALE	SHEET	REV.
	A2	1:2	3 of 4	

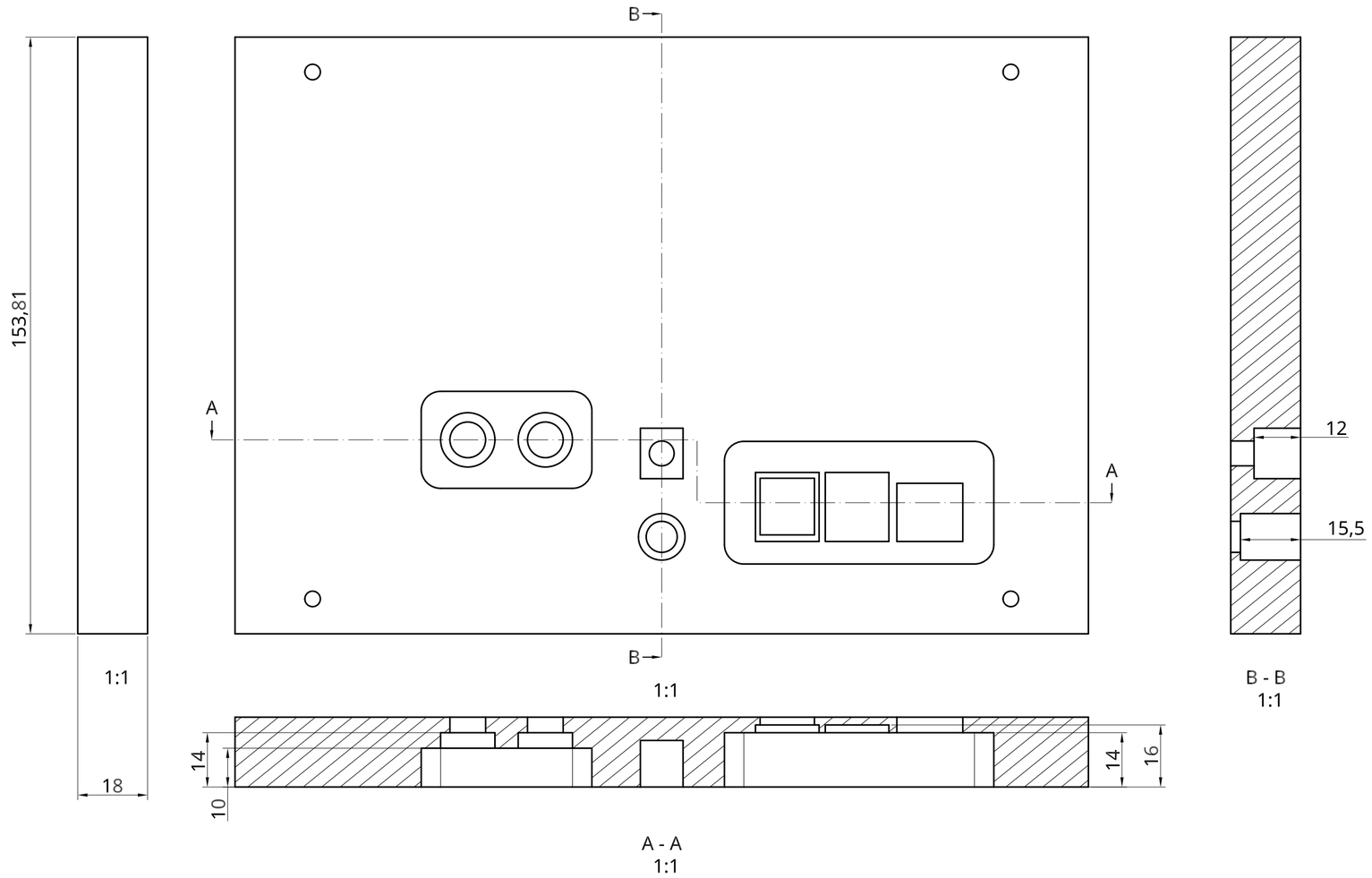

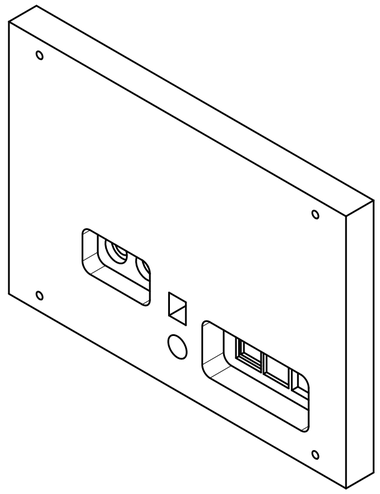

DWG NO.	SIZE	SCALE	SHEET	REV.
	A2	1:2	4 of 4	