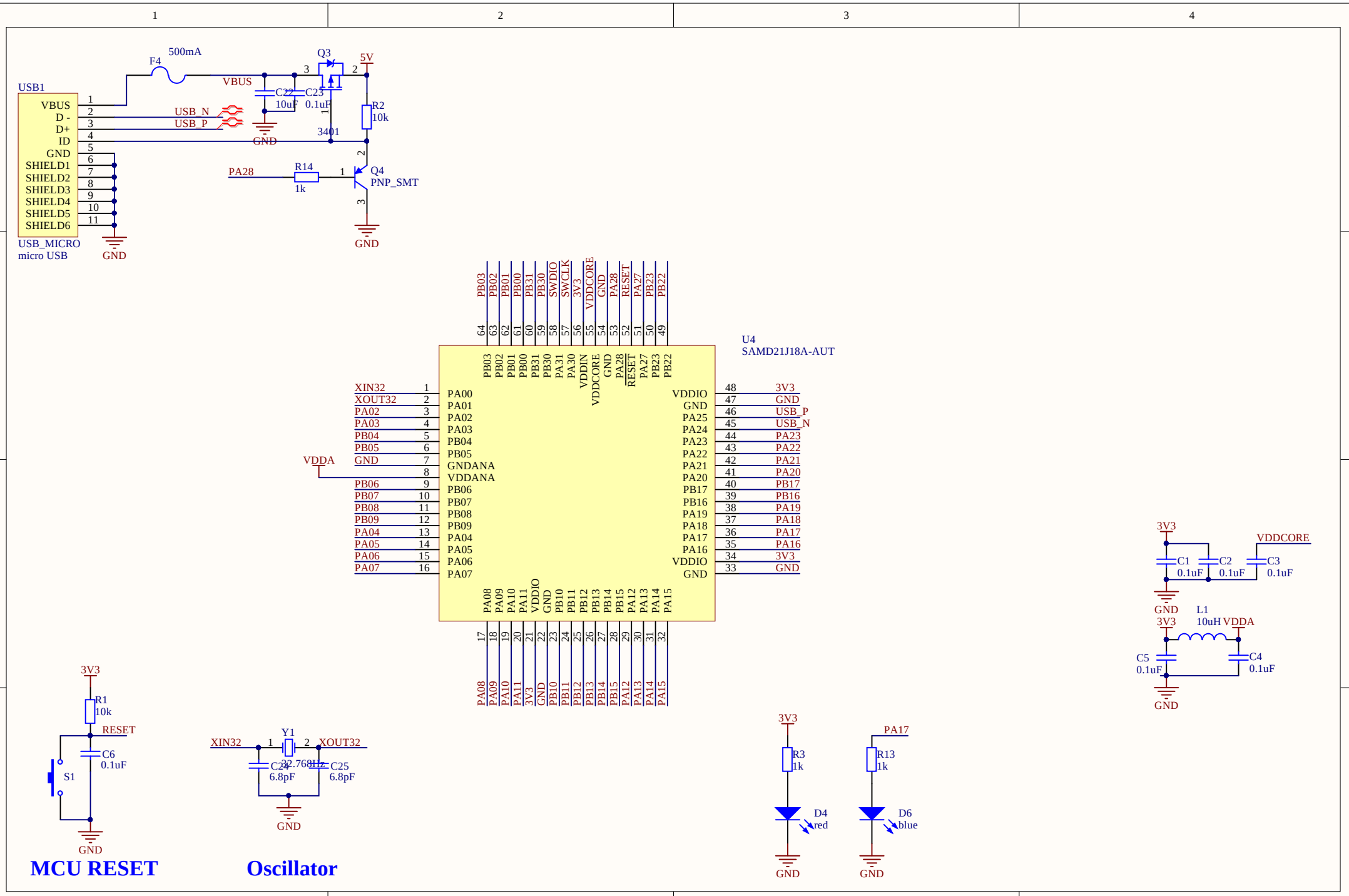
USB1
VBUS
D -
D+
ID
GND
SHIELD1
SHIELD2
SHIELD3
SHIELD4
SHIELD5
SHIELD6
USB_MICRO
micro USB
F4
500mA
VBUS
C22
10uF
C23
0.1uF
Q3
3401
5V
R2
10k
USB_N
USB_P
GND
PA28
R14
1k
Q4
PNP_SMT
U4
SAMD21J18A-AUT
XIN32
XOUT32
VDDA
3V3
VDDCORE
L1
10uH
C1
C2
C3
C4
C5
0.1uF
R1
10k
RESET
C6
S1
Y1
32.768Hz
C24
C25
6.8pF
R3
1k
D4
red
PA17
R13
1k
D6
blue
MCU RESET
Oscillator

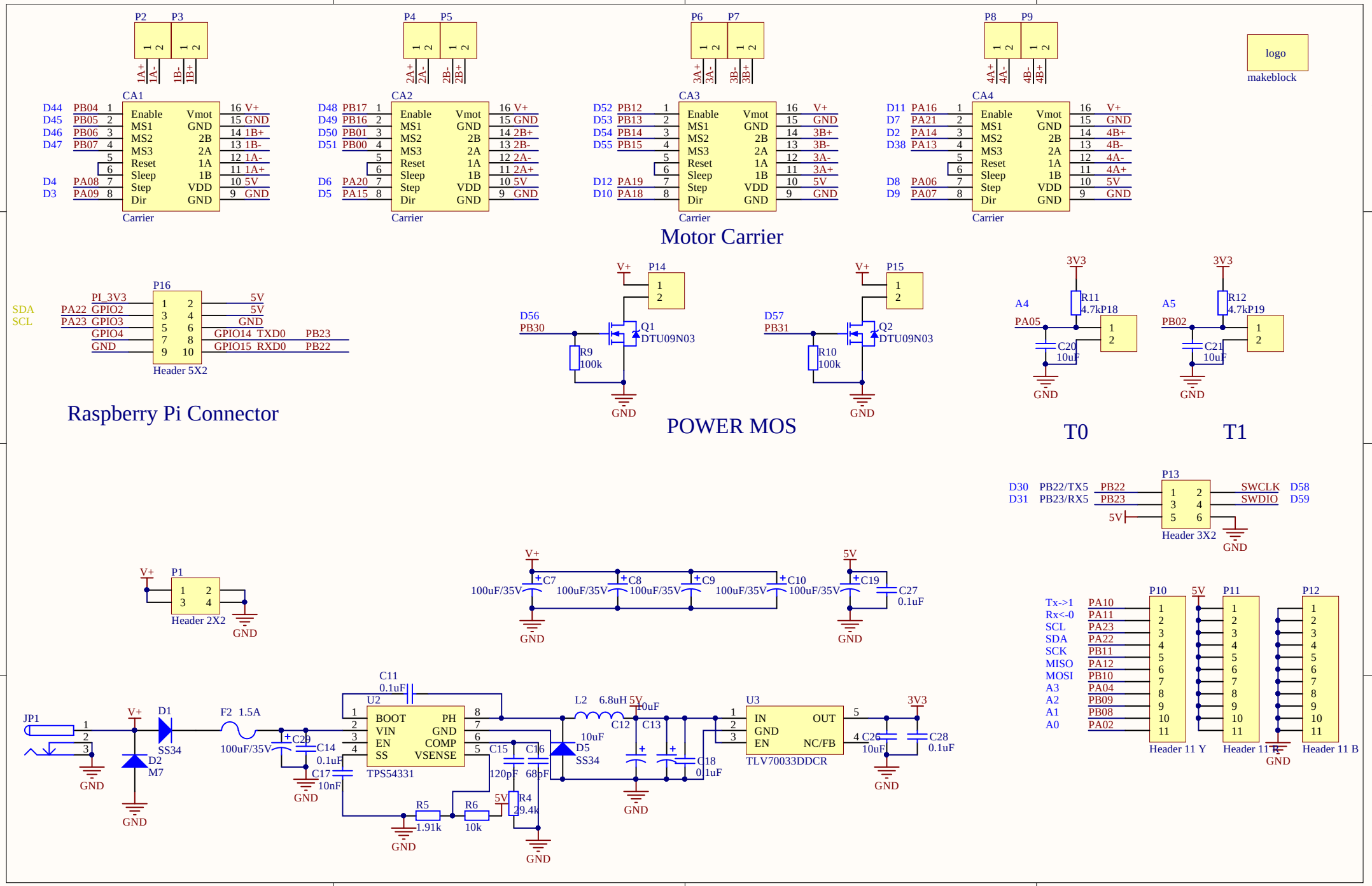
P2 P3 P4 P5 P6 P7 P8 P9
1A+ 1A- 1B- 1B+ 2A+ 2A- 2B- 2B+ 3A+ 3A- 3B- 3B+ 4A+ 4A- 4B- 4B+
logo
makeblock
CA1 CA2 CA3 CA4
Enable Vmot MS1 GND MS2 2B MS3 2A Reset 1A Sleep 1B Step VDD Dir GND
Carrier
D44 PB04 D45 PB05 D46 PB06 D47 PB07 D4 PA08 D3 PA09
D48 PB17 D49 PB16 D50 PB01 D51 PB00 D6 PA20 D5 PA15
D52 PB12 D53 PB13 D54 PB14 D55 PB15 D12 PA19 D10 PA18
D11 PA16 D7 PA21 D2 PA14 D38 PA13 D8 PA06 D9 PA07
V+ 5V 3V3 GND
Motor Carrier
P16
SDA PA22 GPIO2
SCL PA23 GPIO3
PI_3V3 5V GND GPIO4 GPIO14 TXD0 PB23 GND GPIO15 RXD0 PB22
Header 5X2
Raspberry Pi Connector
P14 P15
D56 PB30 Q1 DTU09N03 R9 100k
D57 PB31 Q2 DTU09N03 R10 100k
POWER MOS
A4 PA05 R11 4.7kP18 C20 10uF
A5 PB02 R12 4.7kP19 C21 10uF
T0
T1
P13
D30 PB22/TX5 PB22 SWCLK D58
D31 PB23/RX5 PB23 SWDIO D59
Header 3X2
P1
Header 2X2
C7 C8 C9 C10 C19 C27 0.1uF 100uF/35V
P10 P11 P12
Tx->1 PA10 Rx<-0 PA11 SCL PA23 SDA PA22 SCK PB11 MISO PA12 MOSI PB10 A3 PA04 A2 PB09 A1 PB08 A0 PA02
Header 11 Y Header 11 R Header 11 B
JP1 D1 SS34 D2 M7 F2 1.5A C29 C14 0.1uF C17 10nF
U2 TPS54331 BOOT VIN EN SS PH GND COMP VSENSE
C11 0.1uF C15 120pF C16 68pF R5 1.91k R6 10k R4 29.4k
L2 6.8uH C12 10uF C13 10uF D5 SS34 C18 0.1uF
U3 TLV70033DDCR IN GND EN OUT NC/FB C26 10uF C28 0.1uF
GND