Voltage Divider and Loading Effect

1. Objective

To verify the operation of a **resistive voltage divider** and observe how connecting a load affects the output voltage.

This experiment demonstrates:

- Ohm's Law
- Kirchhoff's Voltage Law
- Voltage Divider
- Loading effect in resistive networks.

2. Components Used

2.1. Components used

Component	Quantity	Description
Breadboard	1	Used for circuit prototyping
Resistor (1 kΩ nominal)	1	Used as R1 in voltage divider
Resistor (2.2 kΩ nominal)	1	Used as R2 in voltage divider
Resistor (~1 kΩ)	1	Used as load resistor RL1
Resistor (~10 kΩ)	1	Used as load resistor RL2
Multimeter	1	Used for voltage, current, and resistance measurements
9 V power supply	1	Input voltage source

2.2. Measured Values

Component	Measured Resistance
R1	964 Ω
R2	2.13 kΩ
RL1	976 Ω
RL2	9.73 kΩ

3. Circuit Diagram

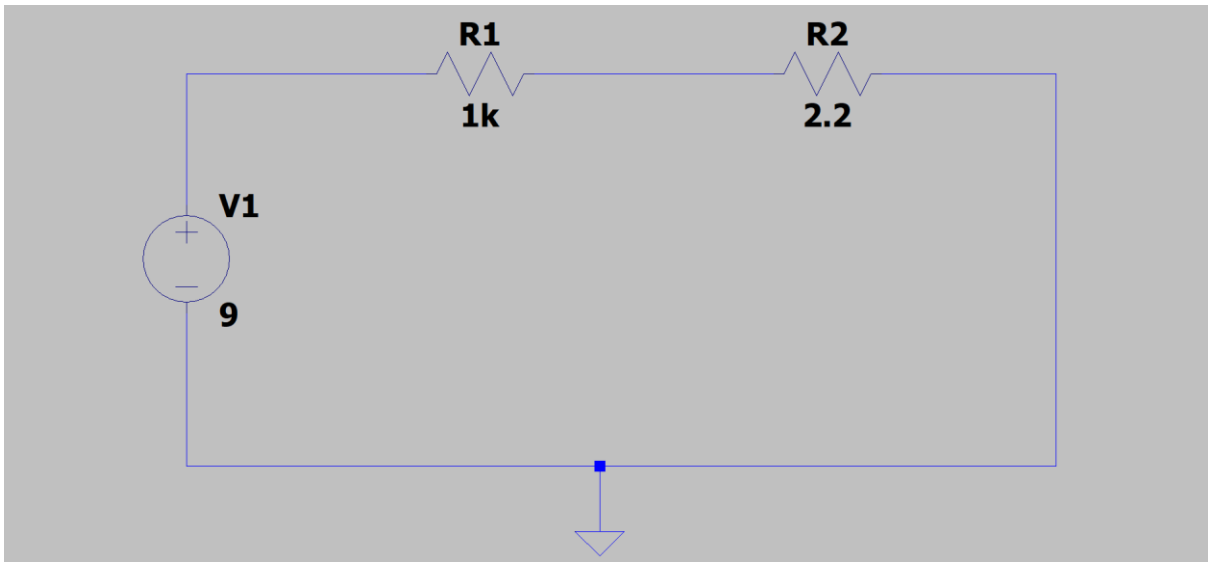

3.1. Fig. [1] Basic voltage divider circuit used in experiment.

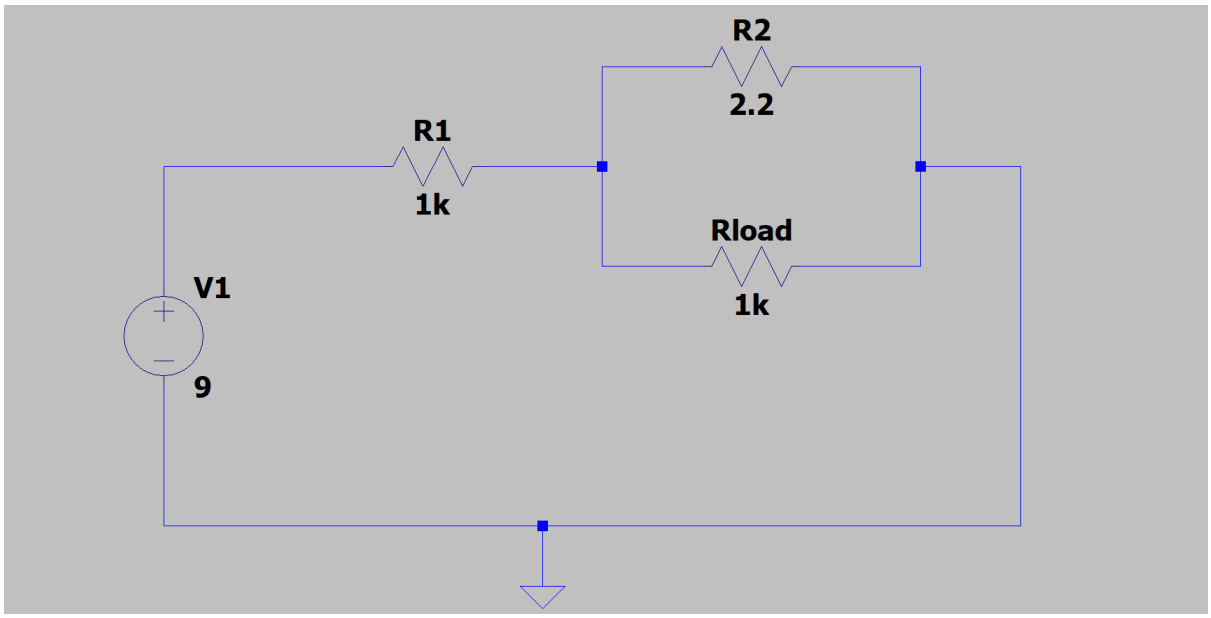

3.2. Fig. [2] Voltage divider circuit with load resistor (RL = 1k ohm)

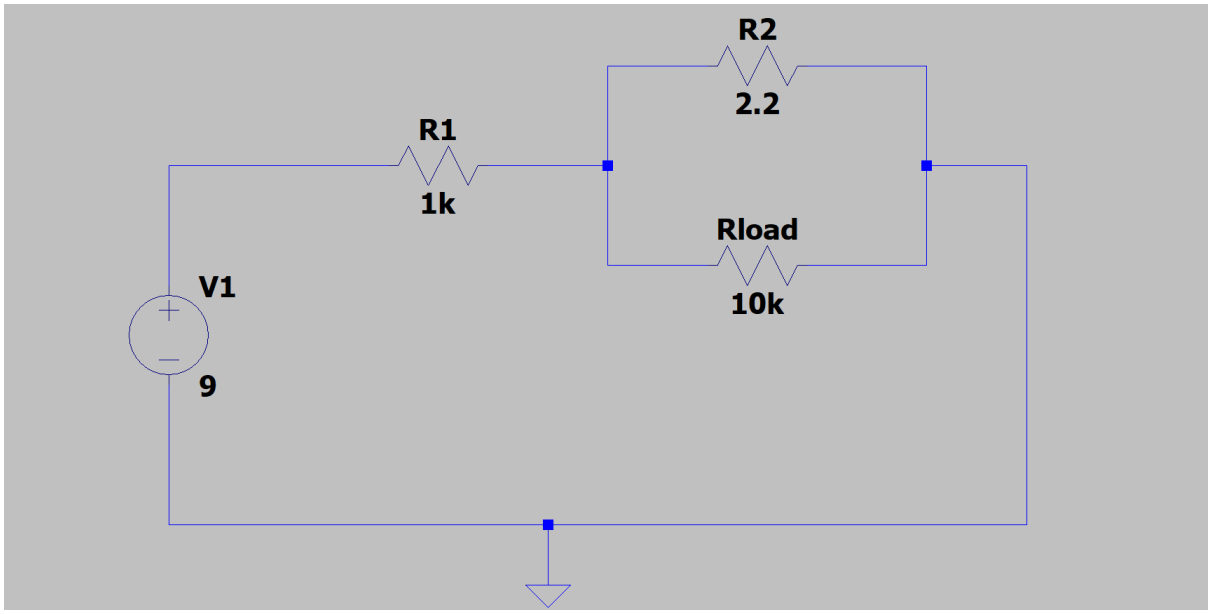

3.3. Fig. [3] Voltage divider with load resistance (RL = 10k ohm)

4. Experimental Setup

Steps performed:

1. Connected the **9 V supply** to the breadboard.
2. Connected **R1 (964 Ω)** from Vin to the middle node.
3. Connected **R2 (2.13 kΩ)** from the middle node to ground.
4. Measured voltages across the resistors and the output node using a multimeter.

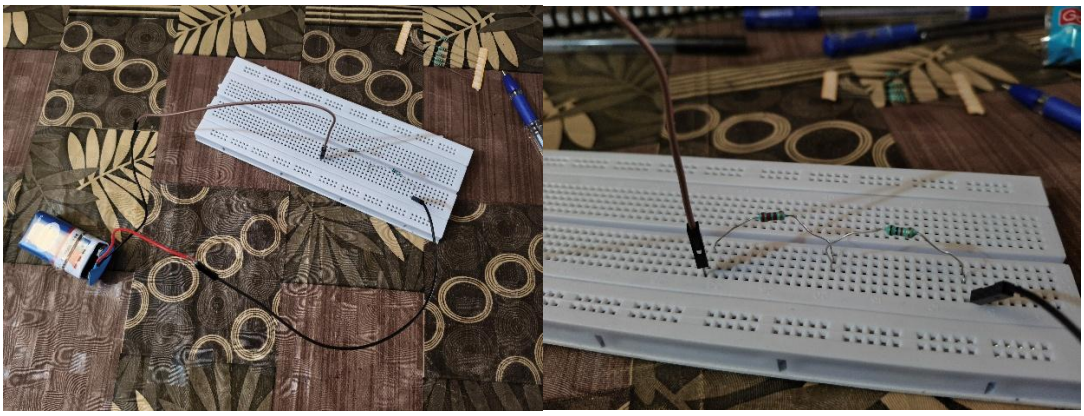

4.1. Fig. [4] Breadboard implementation of voltage divider circuit.

The circuit was implemented on a breadboard using two resistors connected in series to form a voltage divider. The output voltage was measured at the node between the two resistors using a multimeter.

5. Theoretical Calculations

Input voltage:

$$V_{in} = 9.74V$$

Voltage divider formula:

$$V_{out} = V_{in}\frac{R_2}{R_1 + R_2}$$

Substitute values:

$$V_{out} = 9.74 \times \frac{2130}{964 + 2130}$$

$$V_{out} \approx 6.70V$$

6. Experimental Measurements

Quantity	**Measured Value**
Vin	9.74 V
Voltage across R1	2.96 V
Voltage across R2	6.59 V
Current	3.03 mA

Verification of **Kirchhoff's Voltage Law**:

$$V_{R1} + V_{R2} \approx V_{in}$$
$$2.96 + 6.59 = 9.55V \approx 9.74V$$

The small difference is due to measurement tolerance.

7. Loading Effect Experiment

A load resistor R_L was connected between **Vout and ground**.

7.1. Case 1: RL = 1k ohm

Measured values:

RL = 976 ohm

Vout = 3.88 V

Observation:

The output voltage decreased significantly because the load resistance was comparable to the divider resistors.

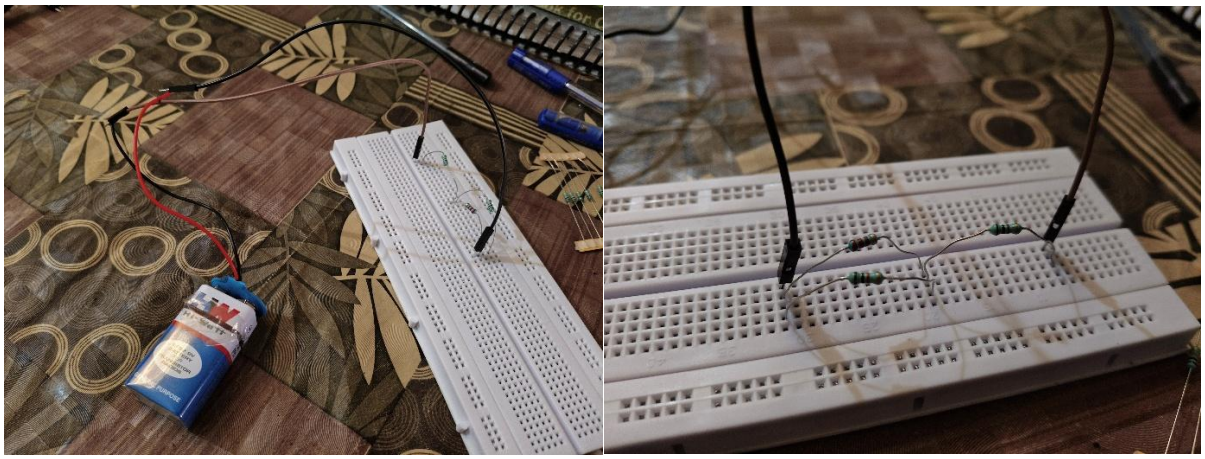

7.1.1. Fig. [5] Breadboard implementation of voltage divider circuit with load resistance (RL = 1k ohm).

The load resistor RL_1 (≈976 Ω) was connected between the output node (Vout) and ground on the breadboard. The output voltage was then measured again to observe the effect of loading on the voltage divider.

7.2. Case 2: RL = 10k ohm

Measured values:

RL = 9.73k ohm

Vout = 6.1 V

Observation:

The voltage decreased only slightly because the load resistance was much larger than the divider resistors.

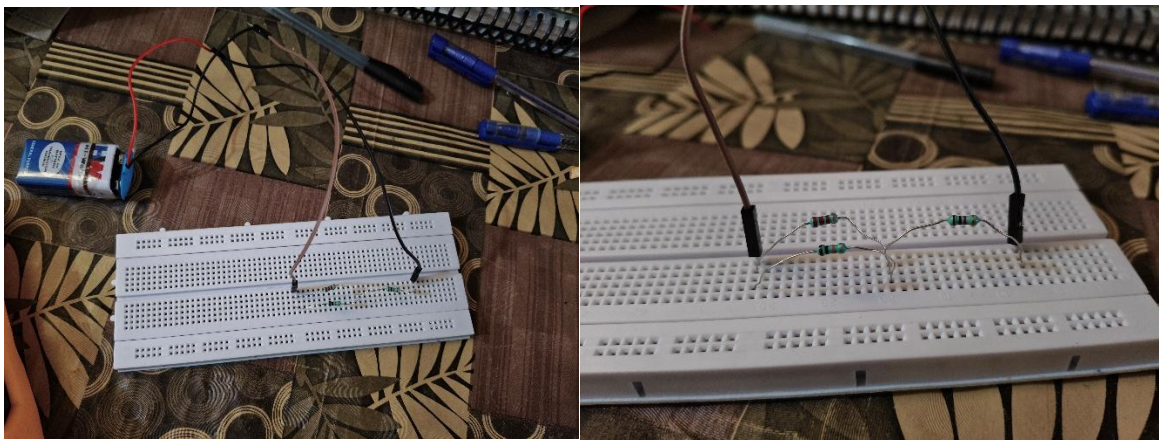

7.2.1. Fig. [6] Breadboard implementation of voltage divider circuit with load resistance (RL = 10k ohm).

The load resistor RL_2 (≈9.73 kΩ) was connected between the output node (Vout) and ground. The output voltage was measured to compare the loading effect when the load resistance is much larger than the divider resistors.

8. Results and Discussion

8.1. Comparison of Theory and Experiment

The theoretical output voltage of the voltage divider was calculated using the voltage divider equation:

$$V_{out} = V_{in} \frac{R_2}{R_1 + R_2}$$

Measured values:

- $V_{in} = 9.74V$
- $R_1 = 964\Omega$
- $R_2 = 2.13k\Omega$

Calculated output voltage:

$$V_{out(theoretical)} \approx 6.70V$$

Measured output voltage:

$$V_{out(measured)} = 6.59V$$

Difference:

$$Error \approx 0.11V$$

Percentage error:

$$\frac{0.11}{6.70} \times 100 \approx 1.6\%$$

The experimental result closely matches the theoretical value predicted by the voltage divider rule.

8.2. Verification of Circuit Laws

The experiment also verified two fundamental electrical principles:

1. Ohm's Law

According to Ohm's Law

$$V = IR$$

Using total resistance:

$$R_{total} = R_1 + R_2 = 3094\Omega$$

Expected current:

$$I = \frac{9.74}{3094} \approx 3.15mA$$

Measured current:

$$3.03mA$$

The measured value closely matches the theoretical prediction.

2. Kirchoff's Voltage Law

According to Kirchhoff's Voltage Law

$$V_{R1} + V_{R2} = V_{in}$$

Measured:

$$2.96V + 6.59V = 9.55V$$

Supply voltage:

$$9.74V$$

The small difference is due to measurement tolerance.

8.3. Loading Effect

When a load resistor was connected across the output node, the effective resistance of the lower branch became:

$$R_{eq} = R_2 \parallel R_L$$

This reduced the resistance in the lower part of the divider.

Results Observed:

Load Resistance	Output Voltage
No load	6.59 V
976 Ω	3.88 V
9.73 kΩ	6.1 V

Observations:

- When **RL ≈ R2**, the output voltage dropped significantly.

- When **RL ≫ R2**, the output voltage changed only slightly.

This demonstrates the practical rule:

A voltage divider works correctly only when the load resistance is much larger than the divider resistors.

8.4. Sources of Experimental Error

Small differences between theoretical and measured values may arise from:

1. **Resistor tolerance**
   Real resistors typically have ±5% variation.
2. **Multimeter accuracy**
   Measurement devices have limited precision.
3. **Breadboard contact resistance**
4. **Power supply fluctuation**
5. **Probe placement during measurements**

These factors introduce minor deviations from ideal calculations.

9. Conclusion

The experiment successfully verified the **voltage divider rule** and demonstrated the **loading effect**.

Key observations:

1. The measured output voltage closely matched the theoretical value.
2. When a **small load resistance** was connected, the output voltage dropped significantly.
3. When the **load resistance was large**, the voltage remained almost unchanged.

This confirms the practical design rule:

For accurate voltage division, the load resistance should be **much larger than the divider resistors**.