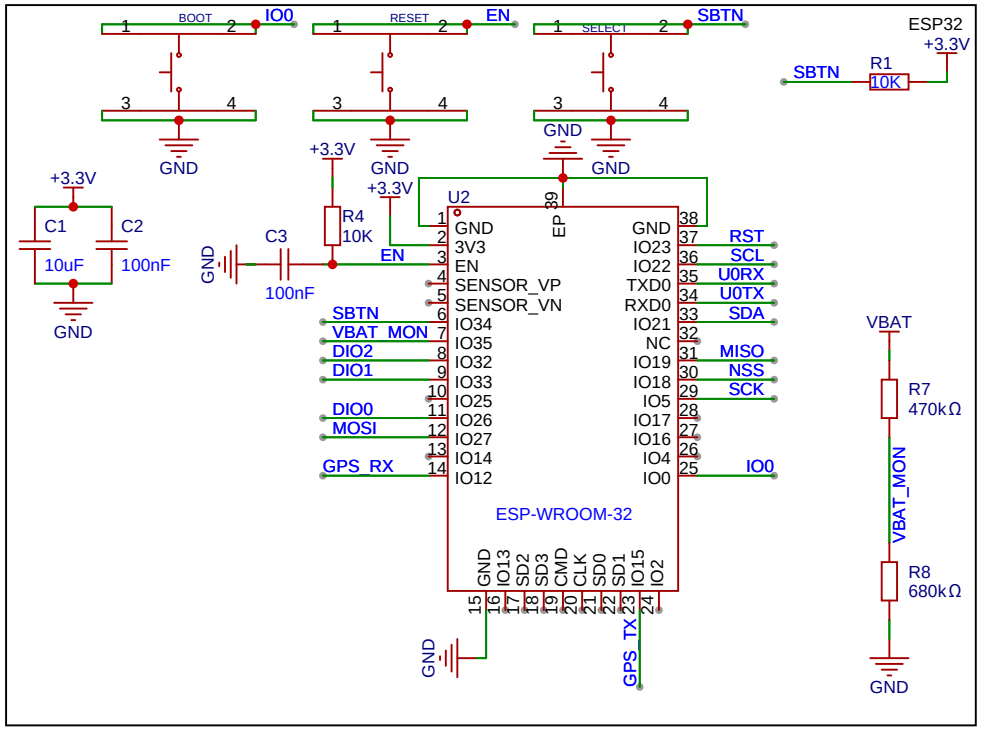

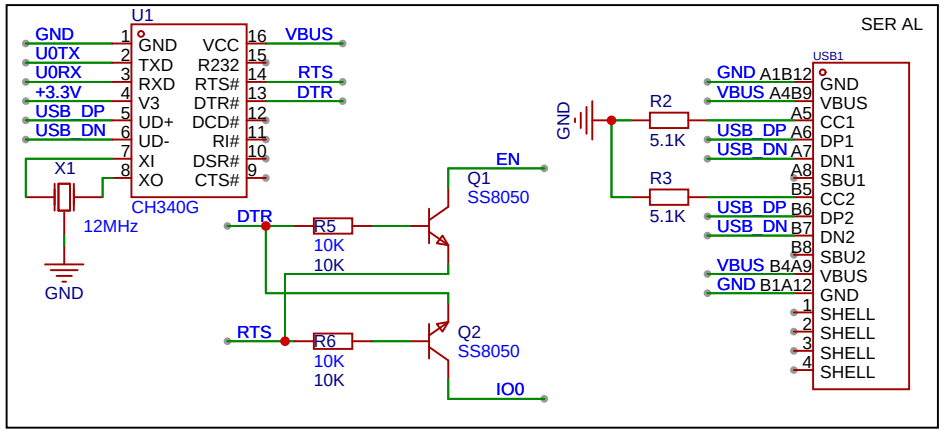

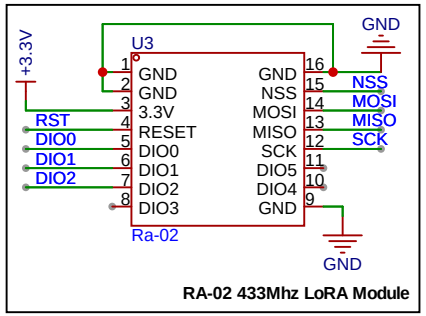

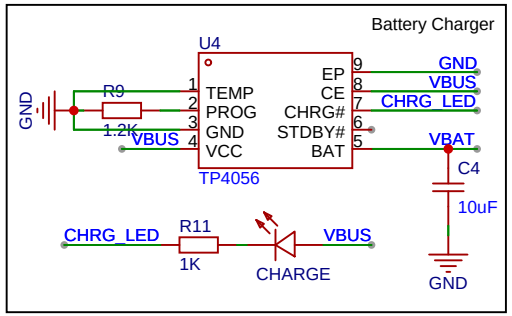

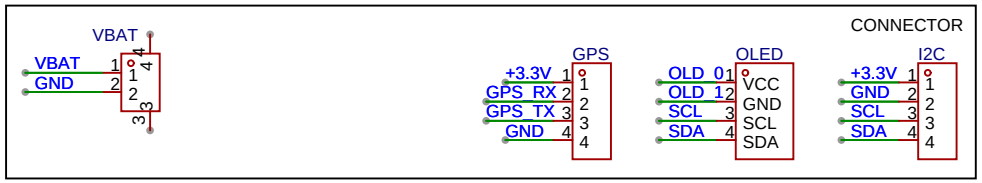

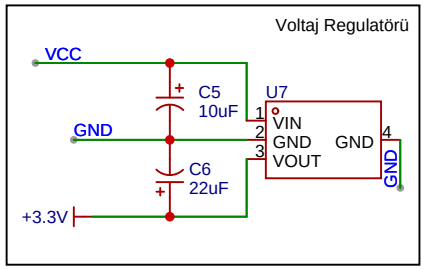

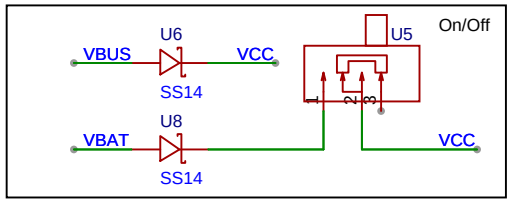

Schematic	MMLSchematic	Create at	2025-01-19
		Update at	2025-11-04
Board	Board	Page	P1
Drawn	MiniMesh Lite V1		
Reviewed			
		Version	Size	Page 1 Total 1
EasyEDA		V1.0	A4	EasyEDA.com