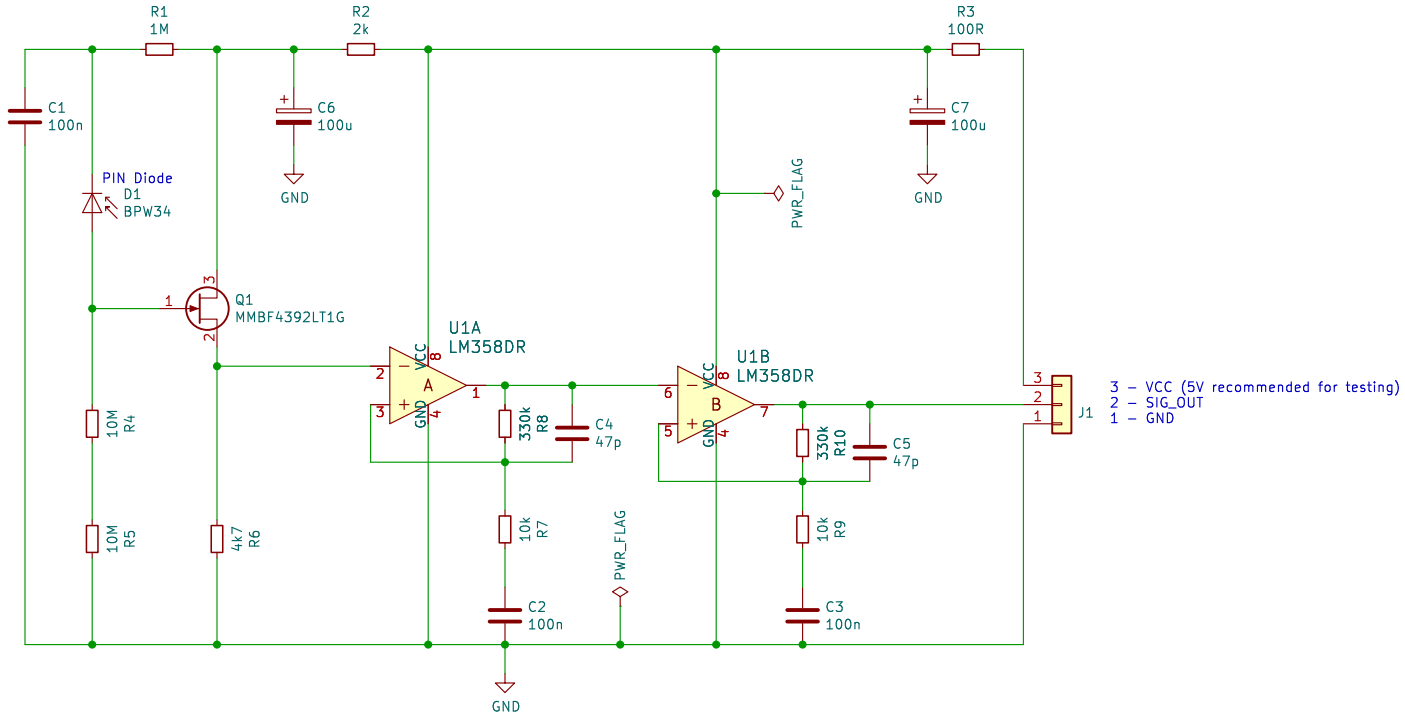

Author : Steven Knudsen
License: CC BY 4.0
creativecommons.org/licenses/by/4.0/

Sheet: /
File: PIN_Radiation_Detector.kicad_sch

Title: PIN Diode Radiation Detector Breakout

Size: USLetter	Date:	Rev: v01
KiCad E.D.A. kicad 7.0.1		Id: 1/1