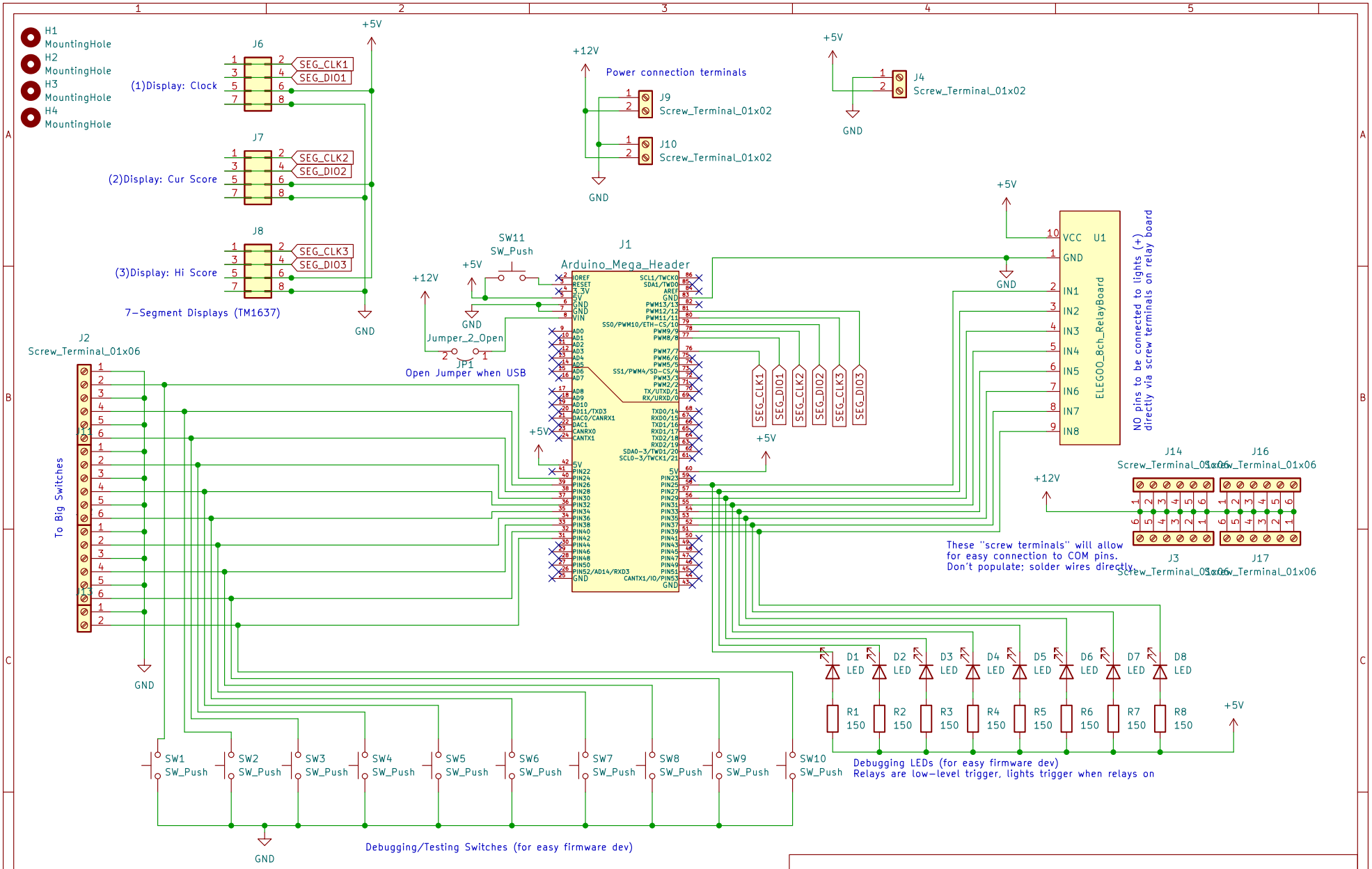

Sheet: /
File: gnctr-wack-a-mole-pcb.kicad_sch

Title:

Size: USLetter	Date:	Rev:
KiCad E.D.A. eeschema (6.0.1)		Id: 1/1