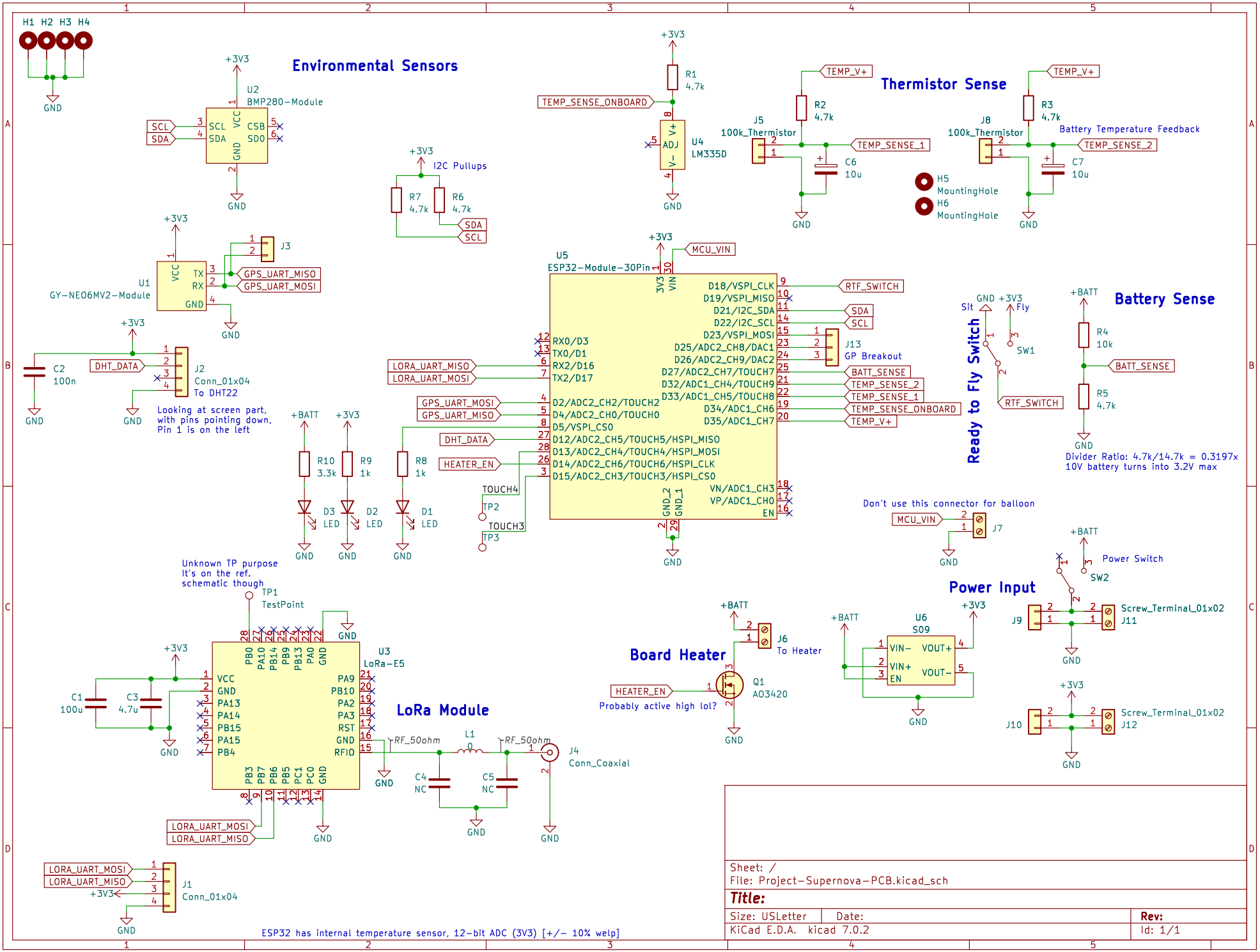
Environmental Sensors
Thermistor Sense
Battery Sense
Ready to Fly Switch
Power Input
Board Heater
LoRa Module
U2
BMP280-Module
U1
GY-NEO6MV2-Module
U5
ESP32-Module-30Pin
U3
LoRa-E5
U4
LM335D
U6
S09
J13
GP Breakout
J2
Conn_01x04
To DHT22
Looking at screen part, with pins pointing down, Pin 1 is on the left
Unknown TP purpose
It's on the ref. schematic though
TP1
TestPoint
J4
Conn_Coaxial
J1
Conn_01x04
J6
To Heater
Q1
AO3420
Probably active high lol?
Divider Ratio: 4.7k/14.7k = 0.3197x
10V battery turns into 3.2V max
Don't use this connector for balloon
J7
Power Switch
SW2
SW1
Screw_Terminal_01x02
J9
J11
J10
J12
H1 H2 H3 H4
H5
MountingHole
H6
MountingHole
Battery Temperature Feedback
I2C Pullups
ESP32 has internal temperature sensor, 12-bit ADC (3V3) [+/- 10% welp]
Sheet: /
File: Project-Supernova-PCB.kicad_sch
Title:
Size: USLetter
Date:
Rev:
KiCad E.D.A. kicad 7.0.2
Id: 1/1