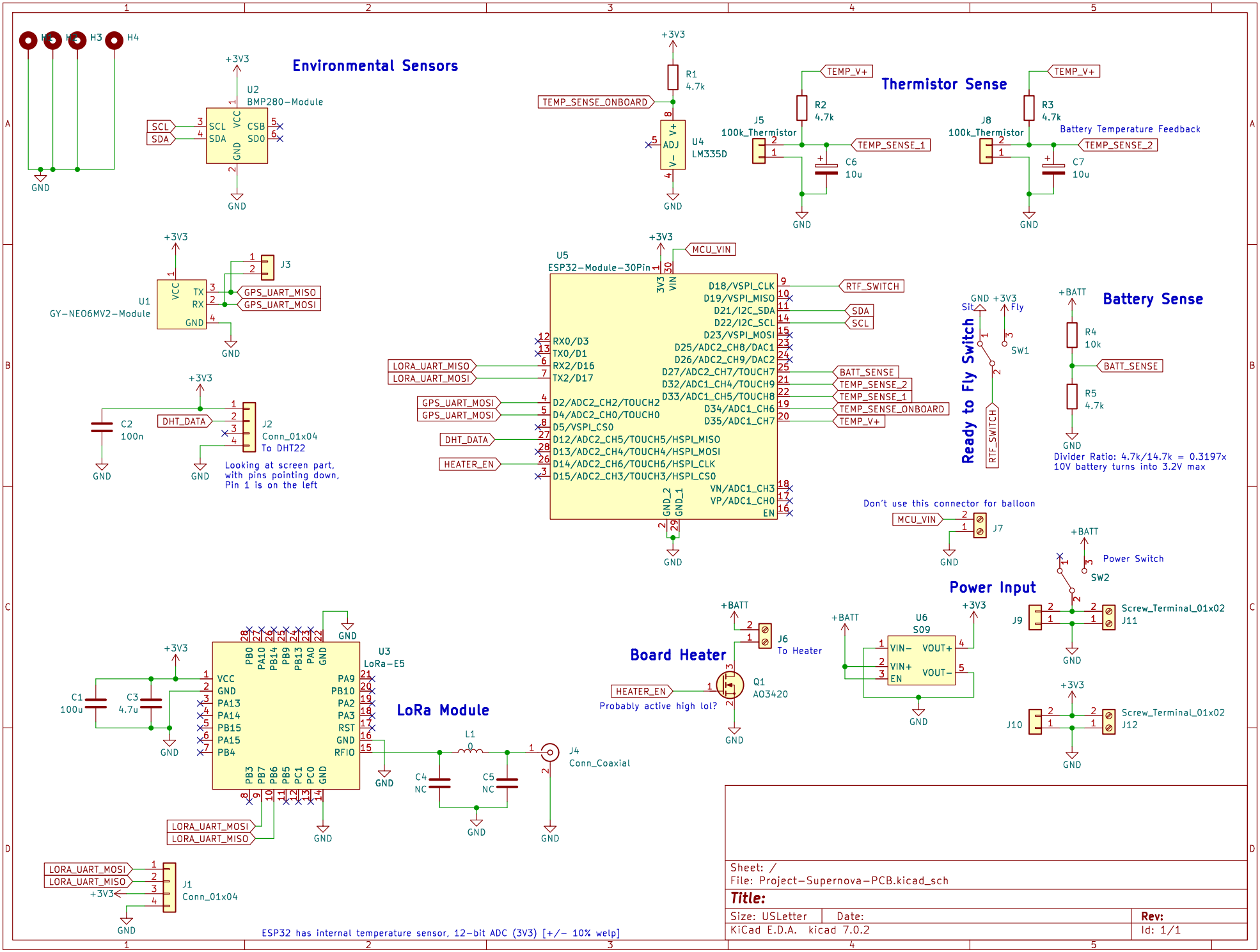
Environmental Sensors
U2
BMP280-Module
SCL
SDA
VCC
GND
CSB
SDO
+3V3
GND
H1
H2
H3
H4
Thermistor Sense
R1
4.7k
TEMP_SENSE_ONBOARD
U4
LM335D
ADJ
V+
V-
R2
4.7k
TEMP_V+
J5
100k_Thermistor
TEMP_SENSE_1
C6
10u
R3
4.7k
J8
100k_Thermistor
Battery Temperature Feedback
TEMP_SENSE_2
C7
10u
U1
GY-NEO6MV2-Module
TX
RX
J3
GPS_UART_MISO
GPS_UART_MOSI
C2
100n
DHT_DATA
J2
Conn_01x04
To DHT22
Looking at screen part,
with pins pointing down,
Pin 1 is on the left
U5
ESP32-Module-30Pin
MCU_VIN
3V3
VIN
RTF_SWITCH
SDA
SCL
BATT_SENSE
TEMP_SENSE_2
TEMP_SENSE_1
TEMP_SENSE_ONBOARD
TEMP_V+
LORA_UART_MISO
LORA_UART_MOSI
GPS_UART_MOSI
HEATER_EN
Ready to Fly Switch
Sit
Fly
SW1
Battery Sense
R4
10k
R5
4.7k
Divider Ratio: 4.7k/14.7k = 0.3197x
10V battery turns into 3.2V max
Don't use this connector for balloon
J7
Power Switch
SW2
Power Input
U6
S09
VIN-
VIN+
EN
VOUT+
VOUT-
J9
J11
Screw_Terminal_01x02
J10
J12
Board Heater
J6
To Heater
Q1
AO3420
Probably active high lol?
U3
LoRa-E5
C1
100u
C3
4.7u
LoRa Module
L1
0
C4
NC
C5
NC
J4
Conn_Coaxial
J1
Conn_01x04
ESP32 has internal temperature sensor, 12-bit ADC (3V3) [+/- 10% welp]
Sheet: /
File: Project-Supernova-PCB.kicad_sch
Title:
Size: USLetter
Date:
Rev:
KiCad E.D.A. kicad 7.0.2
Id: 1/1