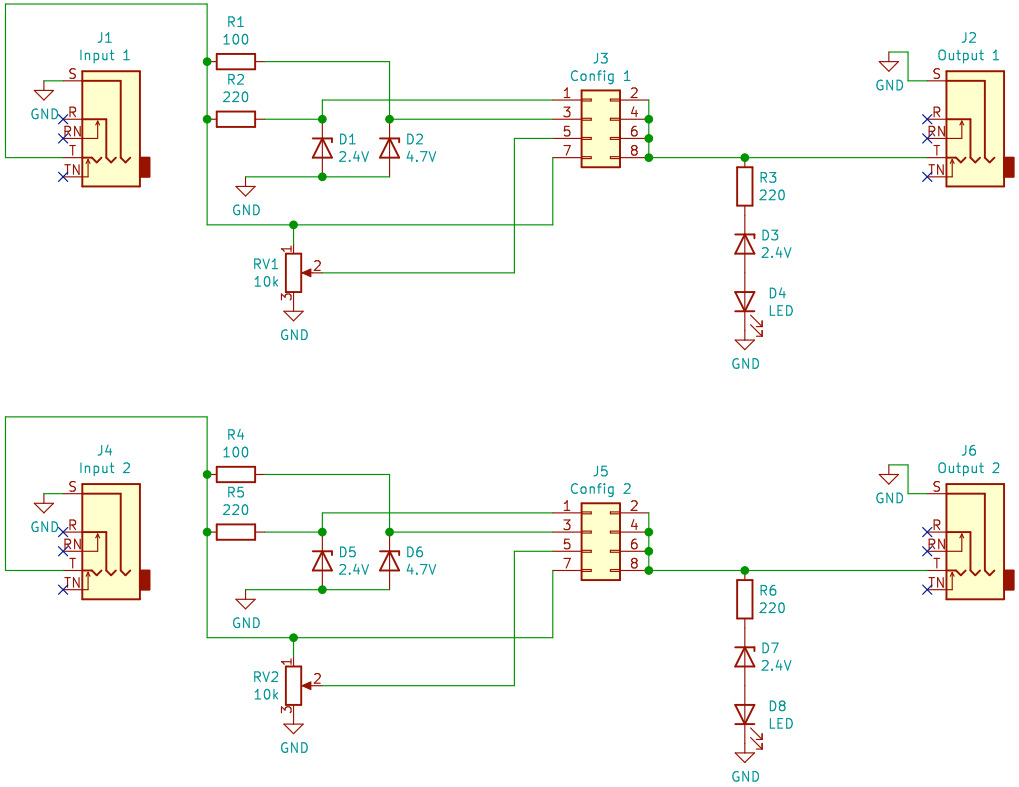

Notes:

1–2 3.3V limit
3–4 5V limit
5–6 Attenuation level
7–8 Passthru

Deftaudio

Sheet: /
File: Trigger_converter.sch

Title: CVGate Attenuator Basic

Size: A4	Date:	Rev:
KiCad E.D.A. kicad (5.1.12-1-10_14)		Id: 1/1