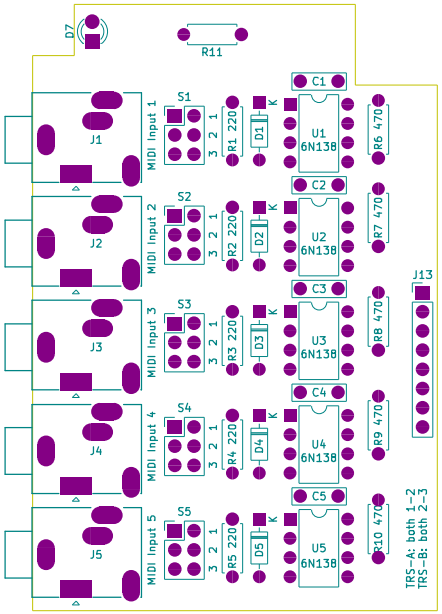

Sheet:
File: Teensy5x5_daughter.kicad_pcb

Title:

Size: A4	Date:	**Rev:**
KiCad E.D.A. pcbnew (5.1.12-1-10_14)		Id: 1/1