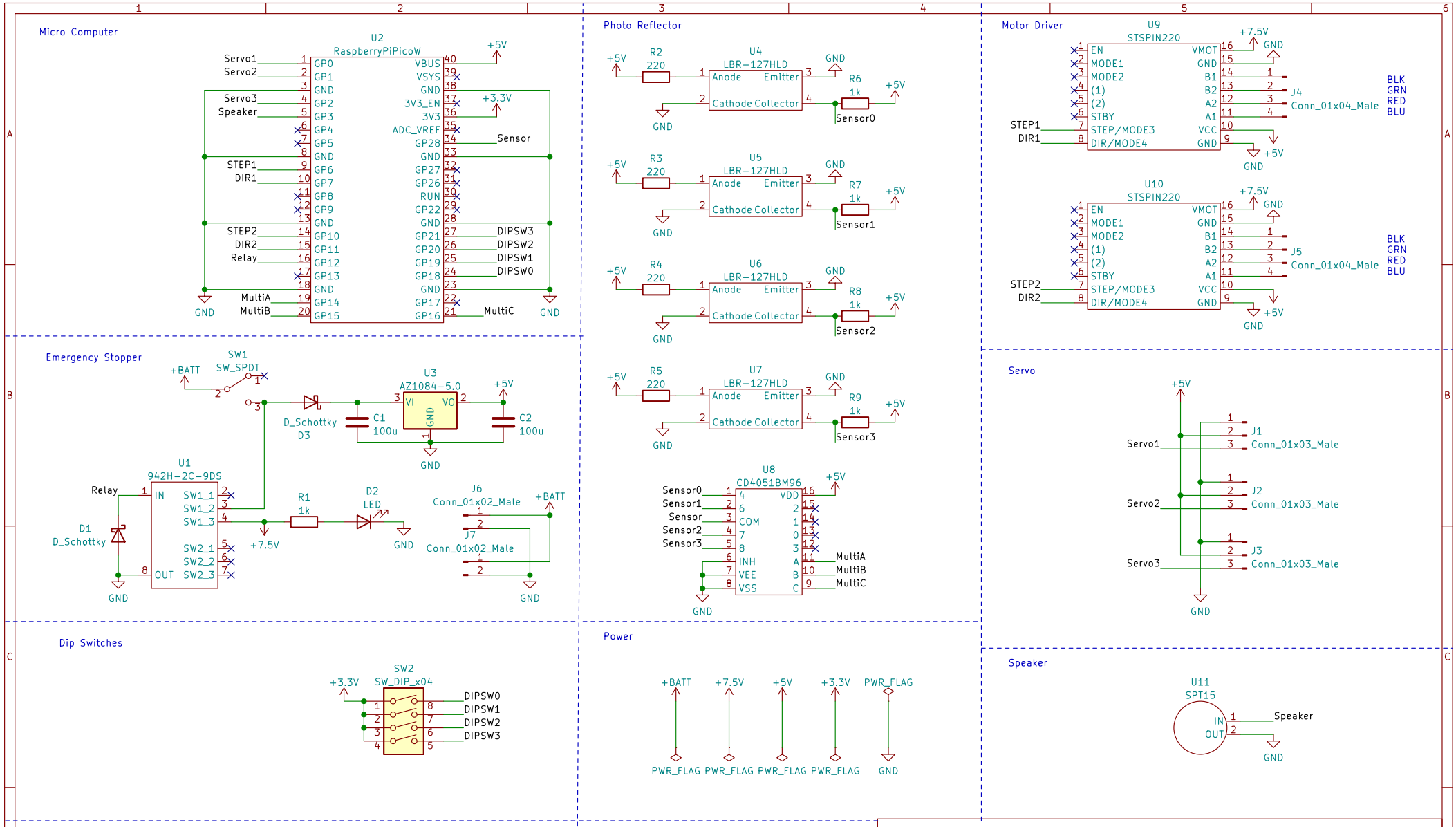
Micro Computer
U2
RaspberryPiPicoW
Servo1
Servo2
Servo3
Speaker
STEP1
DIR1
STEP2
DIR2
Relay
MultiA
MultiB
MultiC
Sensor
DIPSW3
DIPSW2
DIPSW1
DIPSW0
+5V
+3.3V
GND
Photo Reflector
U4
U5
U6
U7
LBR-127HLD
Anode
Cathode
Emitter
Collector
R2
R3
R4
R5
R6
R7
R8
R9
220
1k
Sensor0
Sensor1
Sensor2
Sensor3
U8
CD4051BM96
COM
INH
VEE
VSS
VDD
Motor Driver
U9
U10
STSPIN220
EN
MODE1
MODE2
STBY
STEP/MODE3
DIR/MODE4
VMOT
B1
B2
A2
A1
VCC
+7.5V
J4
J5
Conn_01x04_Male
BLK
GRN
RED
BLU
Emergency Stopper
SW1
SW_SPDT
+BATT
U3
AZ1084-5.0
VI
VO
D_Schottky
D3
C1
100u
C2
100u
U1
942H-2C-9DS
IN
OUT
SW1_1
SW1_2
SW1_3
SW2_1
SW2_2
SW2_3
D1
D_Schottky
R1
1k
D2
LED
J6
Conn_01x02_Male
J7
Servo
J1
J2
J3
Conn_01x03_Male
Dip Switches
SW2
SW_DIP_x04
Power
PWR_FLAG
Speaker
U11
SPT15
Sheet: /
File: catchrobo2023.kicad_sch
Title:
Size: A4
Date:
Rev:
KiCad E.D.A. kicad (6.0.6)
Id: 1/1