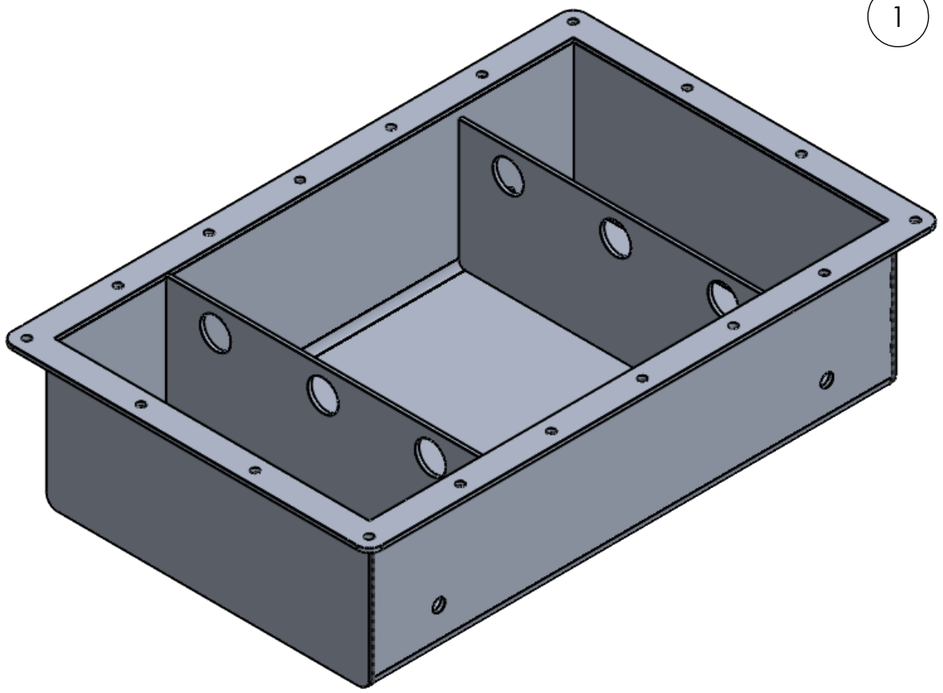

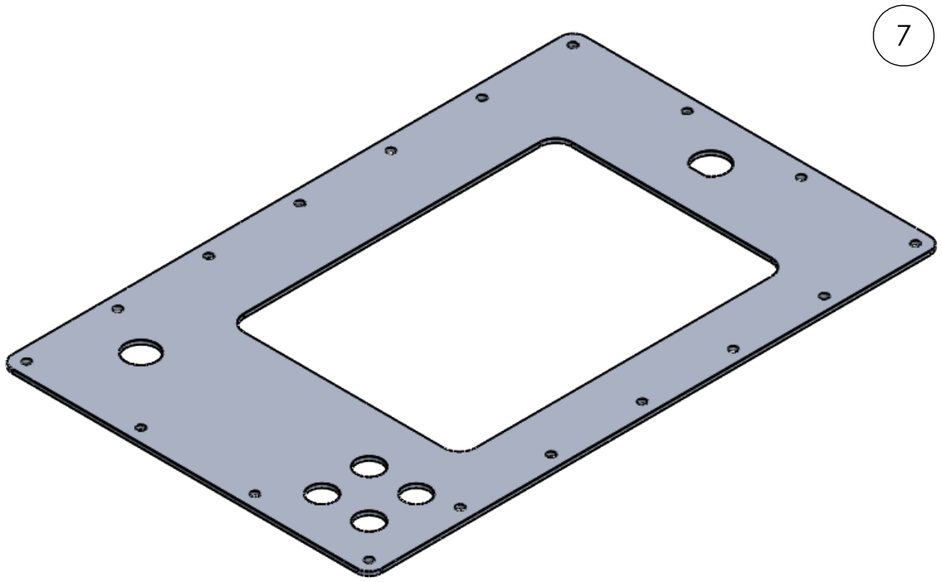

NOTES:
1. ITEMS NO. 5,6 ARE NOT TO BE WELDED

UNLESS OTHERWISE SPECIFIED: DIMENSIONS ARE INCHES TOLERANCES: .XXX=±0.020	FINISH: ---			DEBURR AND BREAK SHARP EDGES	DO NOT SCALE DRAWING	REVISION 1.0
	NAME	SIGNATURE	DATE		TITLE: Storm Drain Robot Body	
DRAWN						
CHK'D						
APPV'D						
MFG						
Q.A				MATERIAL: ---	DWG NO. SD_Robot_Model_Body	A3
				WEIGHT:	SCALE:1:5	SHEET 1 OF 5

SOLIDWORKS Educational Product. For Instructional Use Only.

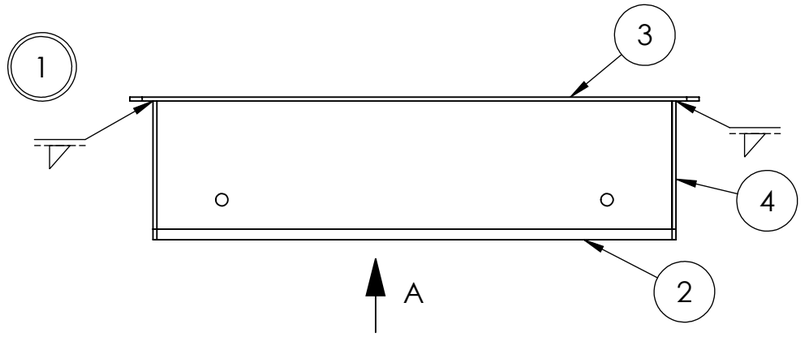

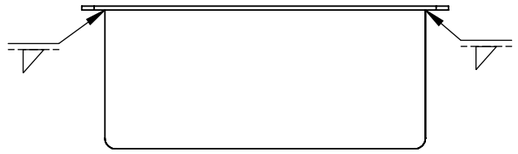

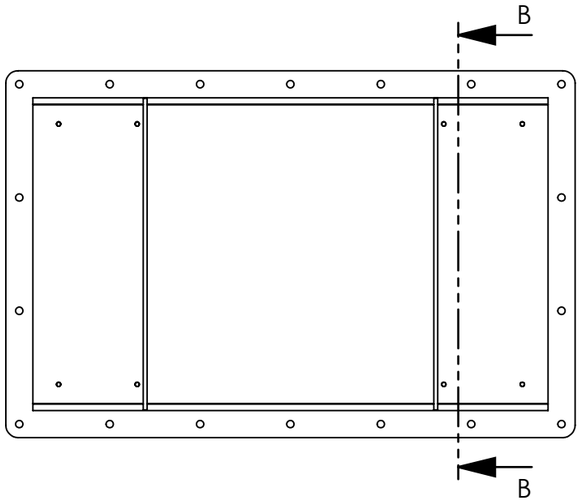

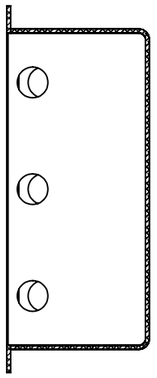

SECTION B-B

ITEM NO.	WELD SIZE	SYMBOL	WELD LENGTH	WELD MATERIAL	QTY.
1		◺	10.289		2
2		◺	16.786		2
3		V	18.907		2

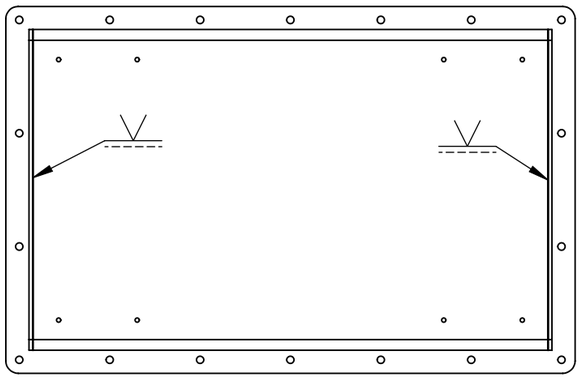

VIEW A

SCALE:1:5 | SHEET 2 OF 5

SOLIDWORKS Educational Product. For Instructional Use Only.

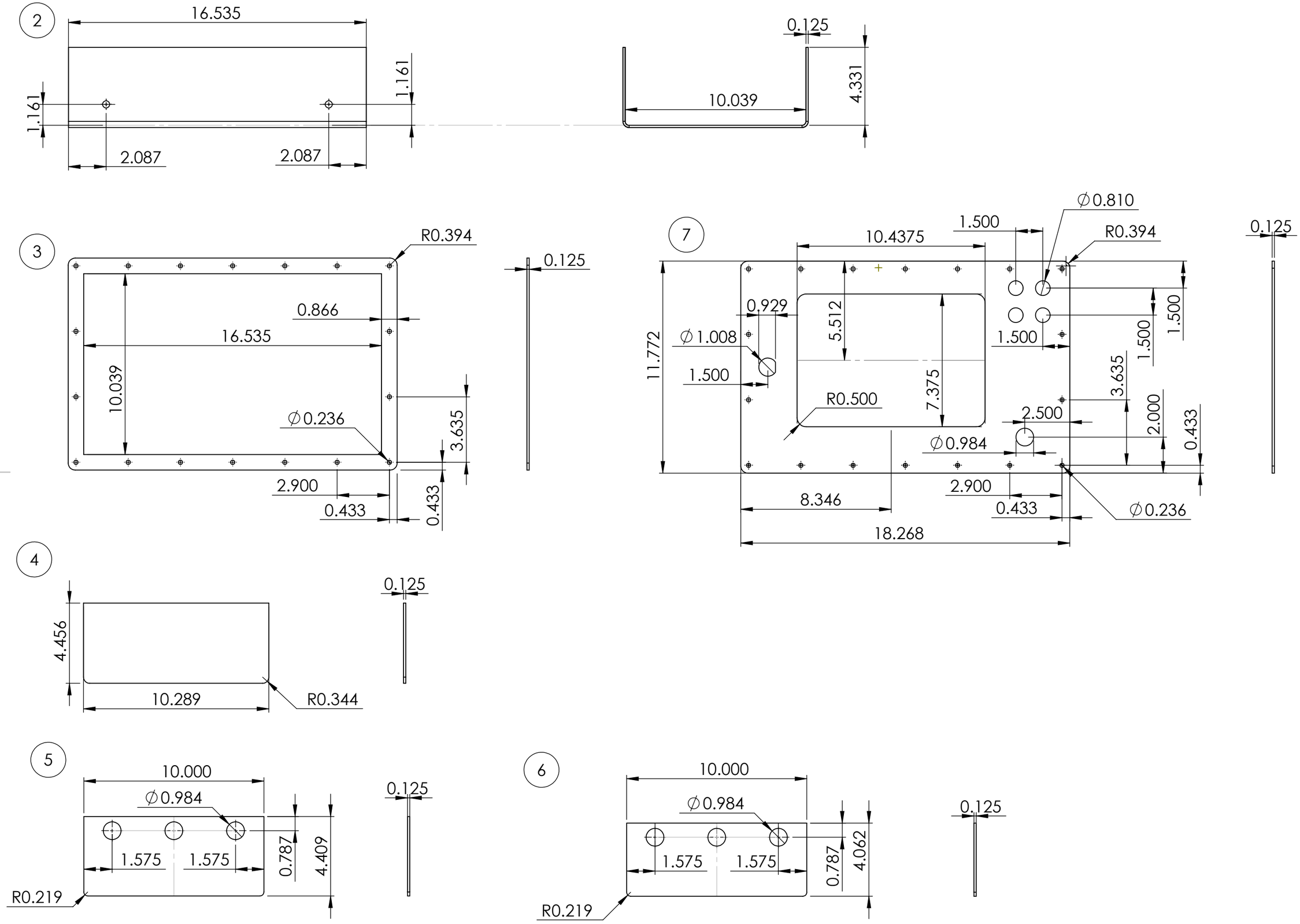

SOLIDWORKS Educational Product. For Instructional Use Only.

8

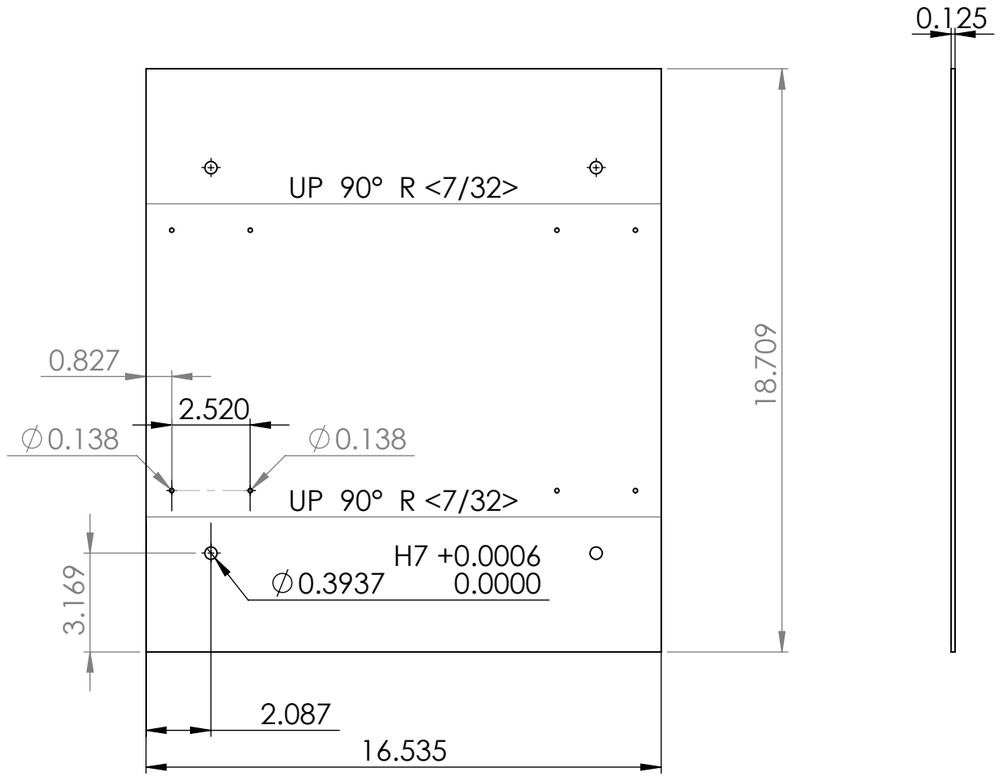

SCALE:1:5 | SHEET 4 OF 5

SOLIDWORKS Educational Product. For Instructional Use Only.

ITEM NO.	PART NUMBER	DESCRIPTION	Material	QTY.
1	Body	Consists of parts 2-6	5052-H32	1
2	Main	Consists of parts 8	5052-H32	1
3	Lid_Flange		5052-H32	1
4	Endcap		5052-H32	2
5	Divider		5052-H32	1
6	Divider2		5052-H32	1
7	Lid		5052-H32	1
8	Main_Flat		5052-H32	1

SCALE:1:2

SHEET 5 OF 5

SOLIDWORKS Educational Product. For Instructional Use Only.