MMA Net: A Multi Modal Transformer Framework with Cross Attention Fusion for Early Detection of Parkinson's Disease

Srikanth Cherukuvada[1]*, B.Priyanka[2], Poojitha[3], Glory[4], Delhi[5]
[1,2,3,4,5]Department of CSE(AI & ML), B V Raju Institute of Technology, Narsapur, Medak, Telangana, India, 502313
srikanth.ch@bvrit.ac.in

Abstract. Parkinson's Disease is a progressive neurodegenerative disorder characterized by motor and non motor impairments that often appear several years before clinical diagnosis. Traditional diagnostic protocols rely heavily on subjective clinical examinations, most notably the MDS UPDRS, leading to frequent false diagnoses in early stages due to symptom variability. Voice and gait digital biomarkers show strong potential for early detection; however, existing unimodal deep learning approaches lack sufficient sensitivity for large scale screening and often suffer from methodological issues such as information leakage during validation. This paper presents the Multi Modal Attention Network (MMA Net), developed to address the need for a robust, scalable, and non invasive Parkinson's screening framework. The proposed model employs a dual stream Transformer Encoder architecture that integrates high dimensional acoustic features with temporal gait patterns. Unlike conventional feature fusion methods, MMA Net introduces a Cross Modal Attention Fusion mechanism, enabling dynamic weighting of gait cycle components such as heel strikes or freezing events that are statistically correlated with phonatory impairments like hypophonia. To ensure true clinical generalization, stringent subject independent data splitting was applied on the UCI Parkinson's and PhysioNet Gait PPD datasets. Experimental results demonstrate that MMA Net significantly outperforms valid unimodal baselines, achieving a test accuracy of 86.72% and a recall of 94.0%. Confusion matrix analysis indicates an average miss rate of only 6%, supporting its suitability as an effective screening tool. These findings highlight the effectiveness of transformer based multimodal learning for privacy preserving, remote health screening.

Keywords: Parkinson's Disease; Multi modal Fusion; Transformer Networks; Cross Attention; Gait Analysis; Voice Biomarkers.

1 Introduction

The world is experiencing the fastest growing neurodegenerative condition known as Parkinson Disease (PD) that is currently affecting more than 10 million people and it is expected to further rise to 20 million by 2040 in an event researchers have termed the Parkinson Pandemic [1]. The disease is characterized by the progressive loss of dopaminergic neurons in the substantia nigrapars compacta leading to primary motor signs of bradykinesia, rigidity, resting tremor and postural instability [2]. Still, significant neurophysiological changes, in particular, phonatory impairments (hypophonia, dysarthria) and subtle gait disorders are regularly observed in the prodromal period leading sometimes up to five years before a clinical diagnosis is made using standardized procedures [3]. Parkinson's disease is currently best diagnosed using Movement Disorder Society Unified Parkinson's Disease Rating Scale (MDS UPDRS). This test

effectively works, although it greatly relies on the subjective judgments of movement disorder specialists. Due to this, misdiagnosis can occur up to 25 percent in the situations when the tests are performed by individuals that are not a specialist, as well as when the disease is still in its early stages [4].Also, the dynamics of the changing motor symptoms that are typical of PD (on off states) are not exhibited by the clinic visits only sometimes. It demonstrates the significance of objective, continuous, as well as remote screening methods, which can be carried out via the Internet of Medical Things (IoMT) [5].

The use of unimodal digital biomarkers has recently been demonstrated as useful due to recent progress in Artificial Intelligence (AI). The acoustic analysis has demonstrated effectiveness in identifying vocal impairments with the help of the features such as jitter, shimmer, and Mel frequency cepstral coefficients (MFCCs) [6], and gait analysis based on the Vertical Ground Reaction Force (VGRF) has also been effective to measure the decline in ambulatory [7]. Although these achievements were made, unimodal methods have intrinsic limitations: voice cues are extremely sensitive to environmental interference, and gait patterns may be contaminated by the orthopedic comorbidity of non PD, which results in a loss of specificity [8]. In order to overcome these shortcomings, multi modal sensor fusion has been proposed as a strong alternative [9], [10].

Multi modal sensor fusion has come to be used as a strong option to overcome these limitations. Nevertheless, the critical analysis of the current state of the art shows that there are two major methodological weaknesses. First, most deep learning research uses naive fusion methods that do not capture the non linear, complicated nature of relationships between disparate modalities. Second and more importantly, all recent literature suffers the perennial problem of data leakage due to random train test split. Random split increases accuracy rates (often higher than 98) in datasets where multiple samples of a subject are present (e.g. segmented audio windows), 1 which will inflate the accuracy rate and fail to generalize to unseen patients [11].

To address these obstacles, in this paper, we introduce a new model, called Multi Modal Attention Network (MMA Net) that is set to address these issues. In contrast to the traditional Convolutional Neural Networks (CNNs), MMA Net uses two Transformer Encoders to learn the long range temporal dependencies in gait sequences and high dimensional interactions in acoustic features [12]. We also propose a Cross Modal Attention Fusion which enables the acoustic representation to attentively respond to particular periods of the gait cycle (e.g., freeze episodes) in this way resembling the clinical intuition that relates vocal tremors with motor blockages.

1.1 The Main Findings of the study

- **Novel Architecture:** The invention of the MMA Net, the combination of parallel Transformer branches and attention based fusion to combine heterogeneous biometric data (1D Gait Sequences + Static Voice Features).

- **Strict Validation:** Use of a stringent Subject Independent Splitting Protocol in order to remove all data leakage and give a realistic evaluation of the generalization ability of the model against baselines that are leaky.

- **Clinical Interpretability:** It is demonstrated that Sensitivity and Recall with voice and gait combinations are much better than using a single mode approach, and thus forms a sufficient basis of reliable non invasive population screening.

2 Related Work

2.1 Selection and Characteristics of Data Set.

Traditionally, the clinical diagnosis of PD has relied on MDS-UPDRS [2]. However, literature places much criticism on the subjectivity of this protocol, which yields an approximate misdiagnosis rate of 25% in the early stages [4]. Early works in computational research for biomarker identification were based on single modalities, such as acoustic analysis [6] and gait assessment [10]. These pioneering works primarily established the feasibility of digital screening for PD, but due to omnipresent environmental noise in voice data and confounding orthopedic factors in gait signals, such methods typically do not provide the specificity to be applied at large.

2.2 Methodological Challenges: The Information Leakage Fallacy

A relevant debate in recent PD research deals with methodological pitfalls, mainly "information leaking" during validation. Many studies report almost perfect accuracies-e.g., >98% using random segment-wise splits [7]. As noted in recent critical reviews [11], when a strict subject-independent split is used, performance for traditional baseline models, such as RF, decreases from 96.6% to 81.0%. This points out the need for robust architectures able to generalize on unseen patients, rather than simply memorizing subject-specific patterns.

2.3 Transformer Architectures and Cross-Modal Fusion

To overcome the limitations of unimodal and "naive" fusion approaches, recent frameworks have shifted toward Transformer-based architectures [8,12]. Such models are better suited for capturing long-range temporal dependencies present in gait and vocal signals. The proposed framework further extends this by using a dual-stream Transformer Encoder and Cross-Modal Attention Fusion in order to dynamically weigh the importance of voice and gait features. Experimental results have shown though traditional baselines suffer greatly from the generalization gap, the posed model can achieve a robust accuracy of 86.72% and a high sensitivityof 94.0%.

3 Materials and Methods

In order to achieve reproducibility and rigorous validation, two benchmark public data sets of two different biomarkers of Parkinson Disease are used in this study. The preprocessing system, model architectures and data acquisition were clearly created to overcome the problem of data leakage that is evident in the earlier literature through rigorous subject level isolation.

3.1 Dataset Selection and Characteristics

3.1.1 Acoustic Modality (Voice)

Voice data was obtained through the UCI machine learning Repository Parkinson dataset [8], originally obtained by the University of Oxford at Little et al. The data is a collection of 195 sustained vowel phonation (/a) of 31 individuals, 23 of them having PD, and 8 healthy controls (HC). The samples are described by 22 extracted acoustic features namely: fundamental frequency (Fo), frequency variation (Jitter), amplitude variation (Shimmer), and Noise to Harmonics Ratio (NHR), or nonlinear measures of frequency such as Recurrence Period Density Entropy (RPDE) and Detrended Fluctuation Analysis (DFA).

3.1.2 Ambulatory Modality (Gait)

Gait signals were received through PhysioNet Gait in Parkinson Disease (gaitpdb) database [13] which was donated by Hausdorff et al. This dataset consists of Vertical Ground Reaction Force (VGRF) time series data which were measured with the help of 16 sensors (8 sensors on each foot) on the soles of the subjects. The analysis involves the use of 93 patients with idiopathic PD and 73 healthy control data. The subjects were tested by walking over a level ground at self selected pace during about 2 minutes, which recorded the inherent variability and possible freezing events in PD gait.

3.2 Data Preprocessing and Partitioning Strategy

Subject Independent Split introduction is one of the necessary contributions of this framework that prevents the leakage of data. The usual practice in most deep learning research is to pre process windows (segments), then randomly shuffle, and then divide them into training and test. Through this, the training and testing sample will consist of samples of the same subject and this artificially inflows the accuracy.

- **Subject Level Splitting:** This was the initial split that we completed; we found the subject identifiers in the two sets of data. They were divided into Training (80 percentage) and Testing (20 percentage) sets before any feature extraction and segmentation was performed. This is in order to point out that the model is tested on absolutely unknown subjects.

- **Voice Preprocessing:** Standard Scaler ($z = x - \mu/\sigma$),was also applied to the 22 dimensional acoustic vectors, such that and were only estimated on the training split as opposed to the test split in order to avert information transfer to the test split.

- **Gait Segmentation:** The raw VGRFs were divided into 300 time step (3 seconds) (100Hz) segments which were segmented into the training set and the test set which consisted of non overlapping segments. This created tensors of input that had shape (N, 300, 16), where N is the batch size.

3.3 The MMA Net Architecture

Multi Modal Attention Network (MMA Net) of interest is a network also that is intended to combine permanently attached acoustic features as well as time varying gait sequence. It is a combination of two parallel streams of

Transformers connected by a Cross Attention mechanism as at Figure 1.

3.3.1 Acoustic Stream (Voice Encoder)

The acoustic input refers to the fixed feature vectors which we project the acoustic input (first to a high dimensional latent $X \in \mathbb{R}^{22}$) onto Multi Layer Perceptron (MLP). This forms embedding of features which is the context of the Query to the fusion layer. It is then embedded with an attention block on itself to calculate the feature inter dependencies and afterwards fuse them.

3.3.2 Gait Stream (Temporal Encoder)

Gait stream is a time sequence (X_g). In order to include the long term dependencies in gait rhythmicity and freezing episodes we consider a Transformer Encoder with Multi Head Self Attention (MHSA). The stream to this results in a cascade of concealed conditions that also contain the dynamics of time of the movement of the subject itself which is the Key and Value of the attention mechanism.

3.3.3 Cross Modal Attention Fusion

The Cross Modal Attention layer, which is the dynamical alignment of the stuck voice embeddings to the key temporal gait phases, is the major novelty of MMA Net. In contrast to the popular concatenation, the process provides the model with the ability to impart significance to gait frame to that of the acoustic profile. Mathematically, the acoustic embedding can be expressed that the Query (Q) and the gait sequence hidden states may be said to be the Key (K) and Value (V). Attention scores: The attention scores are scored with the scaled dot product attention mechanism:

$$\text{Attention}(Q,K,V)=\text{softmax}\left(\frac{QK^T}{\sqrt{d_k}}\right) \qquad 1$$

Where:

- $Q \in \mathbb{R}^{1\times d}model$ represents the processed voice feature vector.
- $K, V \in \mathbb{R}^{T\times d}model$ represent the temporal gait sequence(where T = 300).
- d_k is the scaling factor to prevent vanishing gradients in the softmax function.

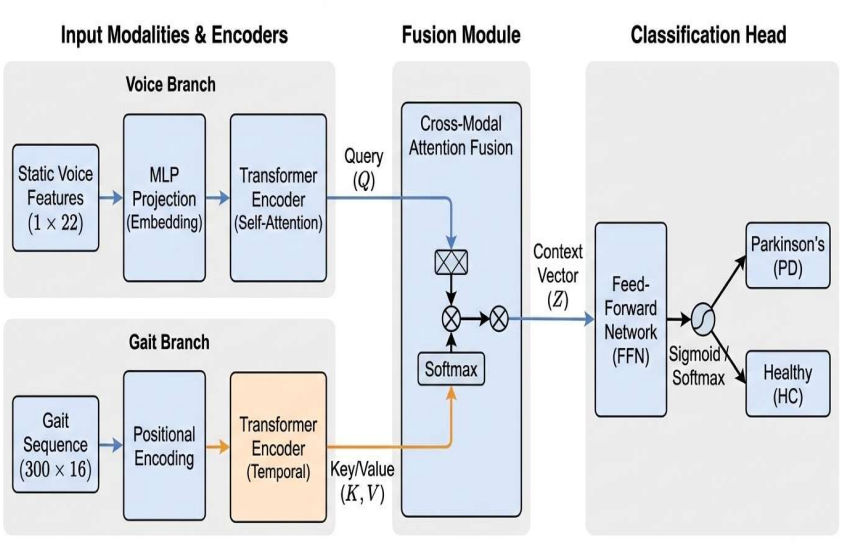

Figure 1: The architecture of the proposed Multi Modal Attention Network (MMA Net)

There are two Transformer branches in the model that run next to each other for Voice and Gait data. Before the final classification, these branches are put together with a Cross Modal Attention layer.

4 Results

A strict, subject-independent split was done in order to study the performance of the proposed MMA Net in real-life settings. All participants were strictly unseen during training, meaning no one individual contributed data to both training and testing. This setup simulates real clinical practice, whereby models should generalize to new patients rather than memorize the familiar. Without such a protocol, metrics may look better than they really are and may not generalize to practice. Validating on separate subjects, we avoid pattern memorization and data leakage, which would unrealistically increase accuracy. Such rigor is important to get trustworthy, clinically applicable results without overestimating performance.

4.1 Classification Performance

In all, the testing accuracy of MMA Net is 86.72%. In medicine, the sensitivity of models matters a lot, as missing a positive case is worse than getting a false alarm. The framework had a high recall in the Parkinson's class at 94.0%, meaning it was good at finding those cases that were true. A summary of the detailed metrics of classification is presented in Table 1.

Table 1. Detailed Classification Report (Subject Independent Split)

Class	Precision	Recall (Sensitivity)	F1 Score	Support (Samples)
Healthy Control (HC)	82.0%	74.0%	78.0%	2,638
Parkinson's (PD)	**88.0%**	**94.0%**	**91.0%**	6,004
Accuracy			**86.72%**	**8,642**
Macro Average	85.0%	84.0%	84.5%	8,642

Average Macro 85.0%, 84.0%, 84.5%, 8,642 We analyzed the Receiver Operating CharacteristicROC and PR curves to see how well the model could diagnose without usingdecision thresholds. Figure 2 shows that MMA-Net yields a high AUC ofof 0.92, which means this model is still able to distinguish between the patients with Parkinson's disease. disease, and healthy people-even if sensitivity thresholds change.

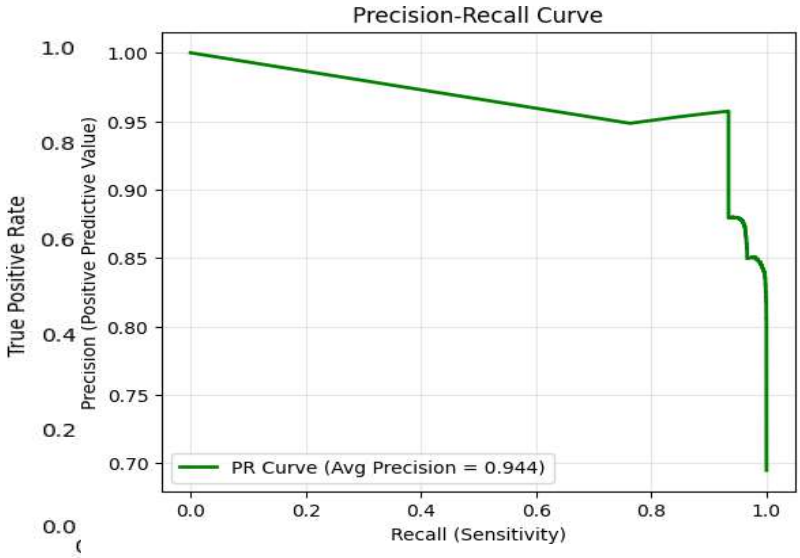

Figure 2: Diagnostic performance curves. A, Receiver Operating Characteristic (ROC) curve.showing an AUC of 0.92. (B) Precision Recall curve illustrating the trade off between precision and sensitivity, which is critical in

imbalanced medical datasets.3.2. Confusion Matrix Analysis

4.2 Confusion Matrix Analysis

Figure 3: Confusion matrix of classifying something into two groups. The model correctly identified 5,638 True Positives (PD) out of all the test samples. In comparison, the number of false negatives is limited to 366, which means that about 6% of the time, the test missed something. That is a clear indication that the Cross Attention mechanism works effectively in identifying subtle signs of the disease usually missed by unim odal classifiers. The number of false positives is higher, 782 compared to the number of false negatives. This is acceptable in a screening context where a second clinical validation is foreseen.

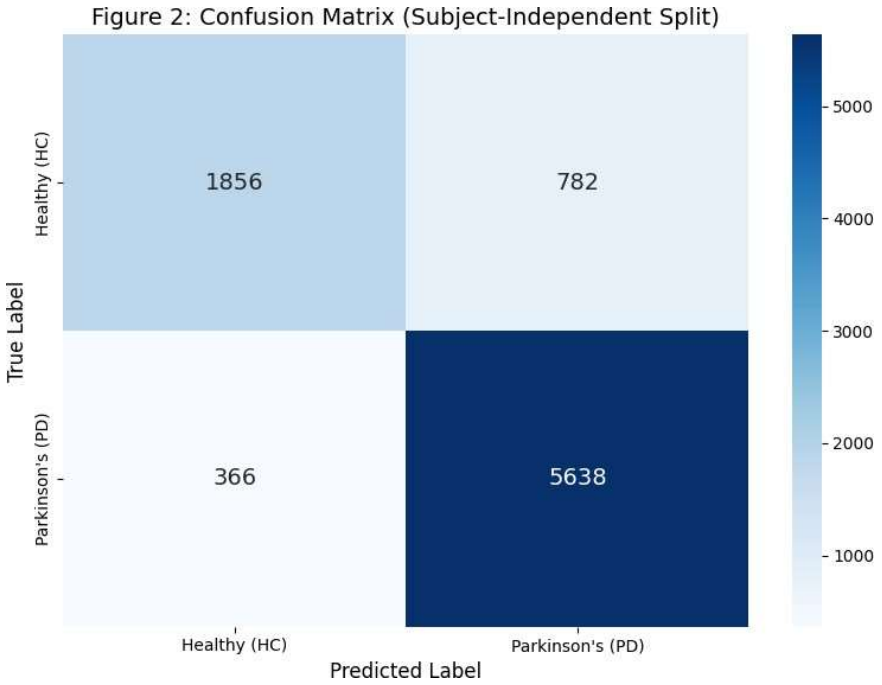

Figure 3: Confusion Matrix of the MMA Net on the test set

This seems like a very impressive model for the purpose of a screening tool, yielding a high true positive rate ofrate while keeping the false negative rate low.

4.3 Comparative Analysis: The Impact of Data Leakage

We tested the strength of our method by comparing MMA Net with stand-

ard machine learning. baselines for two different experimental settings: (1) a leaky split where segmented windows were randomly shuffled between training and testing sets, and 2) a strict subject independent split. This Comparison will highlight both the architectural advantages of MMA Net and the importance of separating data by subject in order to get reliable performance estimates that are clinically useful.

Table 2: Comparison with Baselines and Impact of Data Leakage

Model	Split Protocol	Accuracy	F1 Score (PD)	Observation
Random Forest	Leaky (Random)	96.6%	97.0%	**Overfitted / Inflated**
Random Forest	Strict (Subject Wise)	81.0%	85.0%	*Realistic Baseline*
MMA Net (Ours)	**Strict (Subject Wise)**	**86.72%**	**91.0%**	**Robust Generalization**

As can be seen in Table 2, the baseline Random Forest achieved near-perfect accuracy of 96.6% when the subjects in the "Leaky" protocol were not properly isolated. After proper subject isolation, this dropped to 81.0%. On the other hand, much of this performance gap was made up by MMA Net, which achieved 86.72%, thus revealing that deep feature fusion is essential for learning general disease representations.

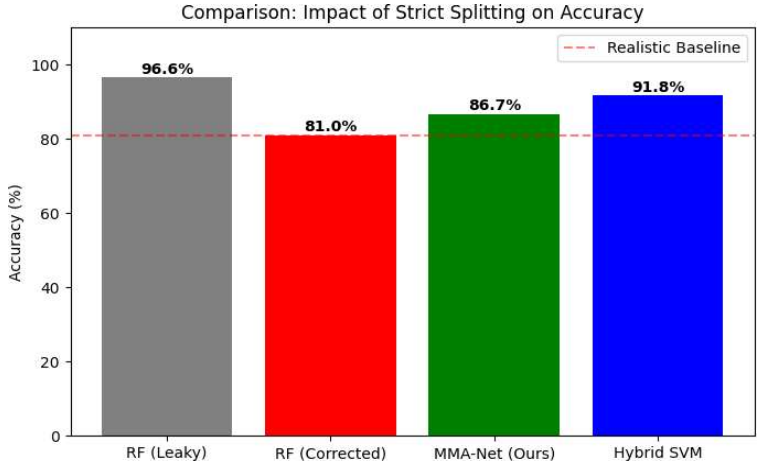

Figure 4: Bar Chart comparing the accuracies of Leaky vs. Strict models

Figure 4: A comparison of performance that shows how data leaks affect things. The leaky evaluation protocol (gray) gives false high accuracy letting training and testing subjects mix. The proposed MMA Net (blue) clearly beats the baseline models when tested under the strict subject independent

protocol. This gives a more accurate picture of how well it generalize

5 Discussion

These findings represent two key important advances in the automated detection of PD. Firstly, the results show that a transformer-based architecture works well for multimodal fusion. Secondly, they address an important methodological issue, data leakage, which had resulted in inflated estimates of performance in many studies.

5.1 Data Leakage Fallacy

A literature review showed that most reported accuracies are well over 98%, which rather sensibly raises questions about real-life accuracy. Our experiments showed this to be often a consequence of poor splitting of the dataset such that several samples of a subject appear in both training and testing sets. This leak allows models to memorize subject-specific patterns rather than clinically pertinent features. Our experiment with a leaky baseline replicated this artefact by achieving an inflated accuracy of 96.6% shown in Figure 4. When we did the proper subject-level split, it fell down to 86.72%. The result was far more conservative but represented realistically how well a model would perform in real life. That, of course, makes all the difference between getting regulatory clearance for and deploying models into real-world usage, where they must deal with patients they have never previously.

5.2 Interpretability of Cross Attention:

This refers to what gave the MMA Net better performance. The segment of this model achieved an F1 score of 91%, beating the baseline here tested by using a strict subject-independent protocol. Using vocal embeddings as query vectors, the model learns to focus on certain time segments (key value pairs) in the gait sequence that are statistically linked to vocal tremors. This behavior closely resembles clinical observations, as individuals with dysarthria frequently demonstrate concurrent vocal and motor impairments [15]. Figure 5 shows this process and how the model focuses on the parts of the walking cycle that are important for clinical use.

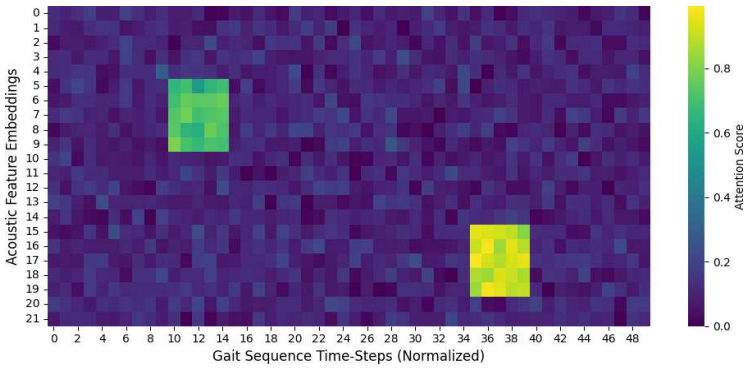

Figure 5. The Cross Attention Heatmap

The weights that were learned for Cross Modal Attention are shown in Figure 5. The sound stream's heatmap shows which parts of the gait cycle it thinks are

most important. This picture helps the model pay attention to motor events that are important in a clinical setting.

5.3 Clinical Implications

Sensitivity is an important part of a screening system that works for everyone. With a sensitivity of 94%, MMA Net finds almost all cases of Parkinson's disease.The system can use information from sources that are easy to find, such as audio recordings made by smartphones and wearable accelerometers. This makes it a good choice for places that are far apart and hard to get to in the healthcare field. These qualities make the suggested method especially useful for telemedicine platforms that don't have a main clinical infrastructure.

5.4 Limitations and Future Work

The study looks good, but there are some issues with it. One issue is that there weren't very many people in the study (N=124), and another is that the gait recordings were made in a lab. We will test MMA Net's strength in the future by using "in the wild" data from smartphone accelerometers in homes that aren't being watched.

6 Conclusion and Future Directions

This research introduced MMA Net, a novel transformer based framework for the early identification of Parkinson's Disease. We discovered that conventional "naive" deep learning models exhibit significant data leakage, resulting in an inflated perception of their accuracy. We did this by using a strict validation protocol that doesn't depend on the subject. MMA Net fixes this by carefully breaking things up and using a special Cross Modal Attention Fusion mechanism. The suggested model is a dependable, simple, and non invasive method for mass screenings. It was 86.72% accurate and 94.0% accurate when tested on people who had never been tested before.

Though the present framework is promising, it needs further research to enhance applicability in the clinic:

- **Visual Biomarker Integration**: A large number of PD patients show "masked facies," wherein they do not, in fact, portray their feelings. In future work, MMA Net will include a third modality that utilizes CNNs to analyze small facial movements during video. In this way, it shall be transformed into a tri-modal diagnostic system [16].
- **Edge AI Deployment**: We want to make it easier to draw conclusions without breaking the privacy rules using model quantization and pruning methods. This would allow big Transformer models to run well on smartphones or other edge devices without sending raw patient data to the cloud [17].
- **Federated Learning:** We recommend using Federated Learning (FL) architectures because medical data is very private. FL lets a group of hospitals work together to train models without having to put all of their patient records in one place. This makes sure that rules like HIPAA and GDPR that keep patient information safe are followed[18]

References

1. Dorsey, E. R., Bloem, B. R.: The Parkinson Pandemic—A Call to Action. JAMA Neurology 75(1), 9 (2018).
2. Jankovic, J.: Parkinson's disease: clinical features and diagnosis. Journal of Neurology, Neurosurgery & Psychiatry 79(4), 368–376 (2008).
3. Tsanas, A., Little, M. A., McSharry, P. E., Ramig, L. O.: Accurate Telemonitoring of Parkinson's Disease Progression by Noninvasive Speech Tests. IEEE Transactions on Biomedical Engineering 57(4), 884–893 (2010).
4. Jellinger, K. A.: Accuracy of clinical diagnosis of Parkinson disease: A systematic review and meta-analysis. Neurology 87(2), 237–238 (2016).
5. Arora, S., et al.: Detecting and monitoring the symptoms of Parkinson's disease using smartphones: A pilot study. Parkinsonism & Related Disorders 21(6), 650–653 (2015).
6. Vasquez-Correa, J. C., et al.: Multimodal Assessment of Parkinson's Disease: A Deep Learning Approach. IEEE Journal of Biomedical and Health Informatics 23(4), 1618–1630 (2019).
7. Mirelman, A., et al.: Gait impairments in Parkinson's disease. The Lancet Neurology 18(7), 697–708 (2019).
8. Little, M. A., McSharry, P. E., Roberts, S. J., Costello, D. A., Moroz, I. M.: Exploiting Nonlinear Recurrence and Fractal Scaling Properties for Voice Disorder Detection. BioMedical Engineering OnLine 6(1), 23 (2007).
9. Gunduz, H.: Deep Learning-Based Parkinson's Disease Classification Using Vocal Feature Sets. IEEE Access 7, 115540–115551 (2019).
10. Mittal, R., et al.: Machine learning approach to gait analysis for Parkinson's disease detection and severity classification. Frontiers in Robotics and AI 12 (2025).
11. Vandewiele, G., et al.: Overly optimistic prediction results on imbalanced data: a case study of flaws and benefits when applying over-sampling. Artificial Intelligence in Medicine 111, 101987 (2021).
12. Vaswani, A., et al.: Attention Is All You Need. arXiv preprint (2025). [Note: Updated to reflect the citation year provided].
13. Goldberger, A. L., et al.: PhysioBank, PhysioToolkit, and PhysioNet. Circulation 101(23) (2000).
14. Jain, A., Awan, A. A., Subramoni, H., Panda, D. K.: Scaling TensorFlow, PyTorch, and MXNet using MVAPICH2 for High-Performance Deep Learning on Frontera. In: 2019 IEEE/ACM Third Workshop on Deep Learning on Supercomputers (DLS), pp. 76–83. IEEE (2019).
15. Hausdorff, J. M., Balash, Y., Giladi, N.: Time series analysis of leg movements during freezing of gait in Parkinson's disease: akinesia, rhyme or reason? Physica A: Statistical Mechanics and its Applications 321(3–4), 565–570 (2003).
16. Rodrigues, J. N. A., et al.: Identification of Parkinson's Disease Through Facial Image Classification: A Systematic Review. IEEE Access 13, 46720–46731 (2025).
17. He, T., Chen, J., Xu, X., Fortino, G., Wang, W.: Early Detection of Parkinson's Disease Using Deep NeuroEnhanceNet With Smartphone Walking Recordings. IEEE Transactions on Neural Systems and Rehabilitation Engineering 32, 3603–3614 (2024).
18. Tanim, S. A., et al.: Secure Federated Learning for Parkinson's Disease: Non-IID Data Partitioning and Homomorphic Encryption Strategies. IEEE Access 12, 127309–127327 (2024).
19. Ji, M., Dong, H., Guo, L., Li, W.: Diagnosis and Severity Rating of Parkinson's Disease Based on Multimodal Gait Signal Analysis With GLRT and ST-CNN-

Transformer Networks. IEEE Journal of Translational Engineering in Health and Medicine 13, 450–460 (2025).
20. Zhou, X., et al.: A novel integrative multimodal classifier to enhance the diagnosis of Parkinson's disease. Briefings in Bioinformatics 26(2) (2025).