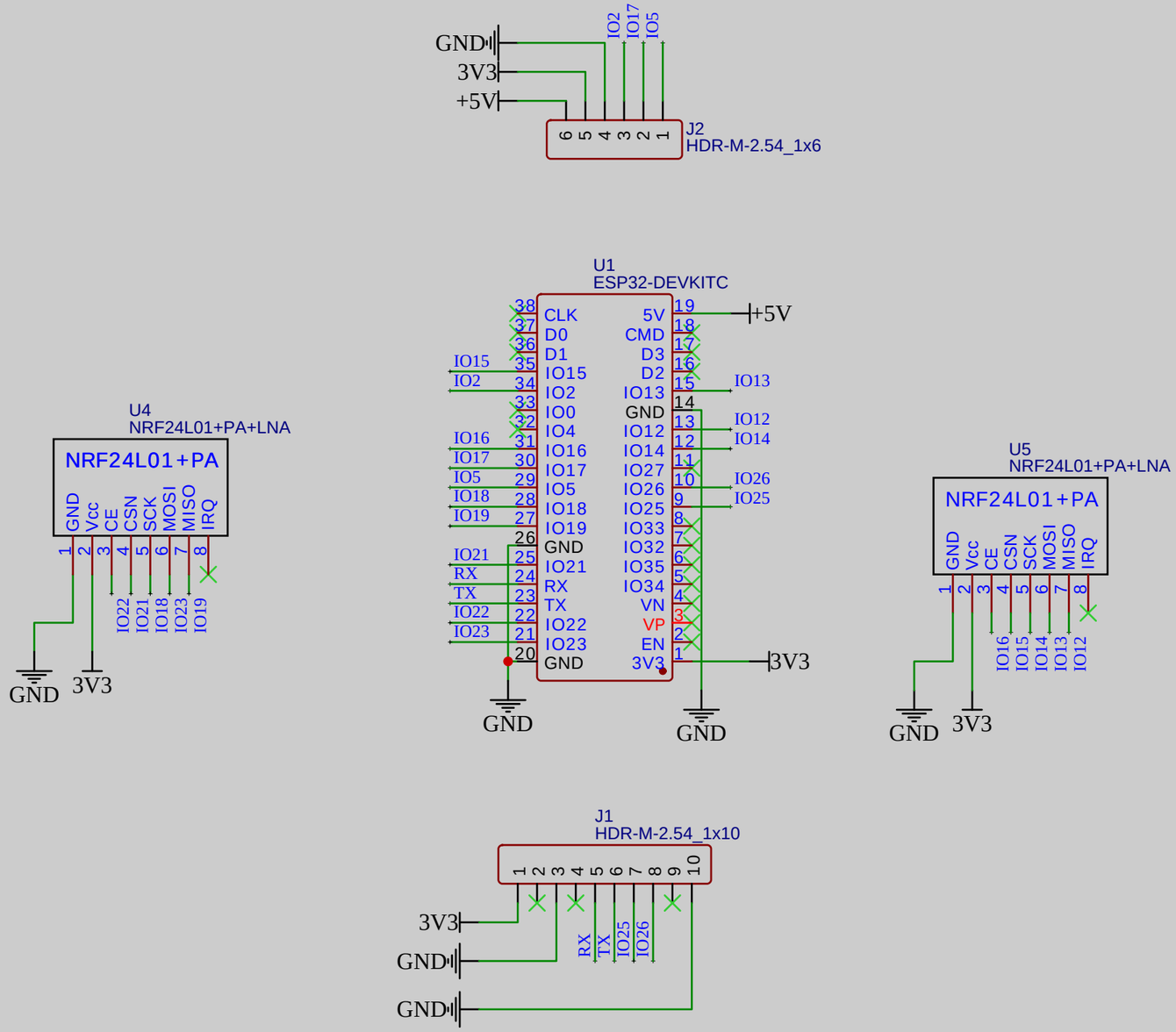

TITLE: NRF24x2 ESP32		REV: 1.0
EasyEDA	Company: L.H.	Sheet: 1/1
	Date: 2024-09-28 Drawn By: DK	