Homework 2: Dynamic and Sequential Logic

1 Problem

Your Manager has asked you to compare 3 circuit styles to implement a fast arithmetic component in an upcoming test chip. The 3 circuit styles he wants you to compare are: Static CMOS, N-P cascaded Dynamic logic and Domino Logic. The metrics for comparison are Performance (Propagation delay), Switching energy and Energy-Delay product.

In the comparison it is fair to compare a buffer (2 inverters) performance and energy dissipation where the buffer drives a capacitance equal to 4X the input capacitance of the buffer for each of the 3 logic styles you are comparing. *Your sizing of transistors of the first and second inverter in each of these styles should attempt to minimize the Energy-Delay product.* You can assume the total switching energy equals the area under the power supply current × VDD in a given clock cycle.

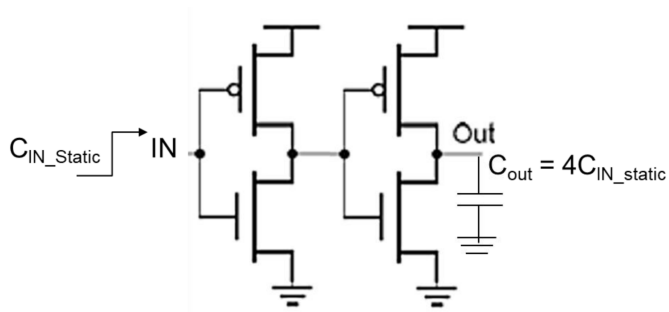

Figure 1: Static

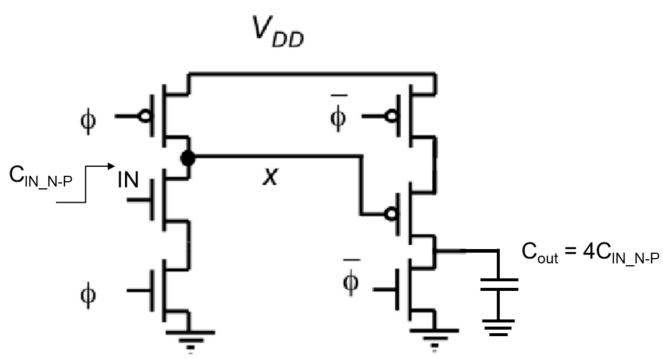

Figure 2: N-P Cascaded Dynamic

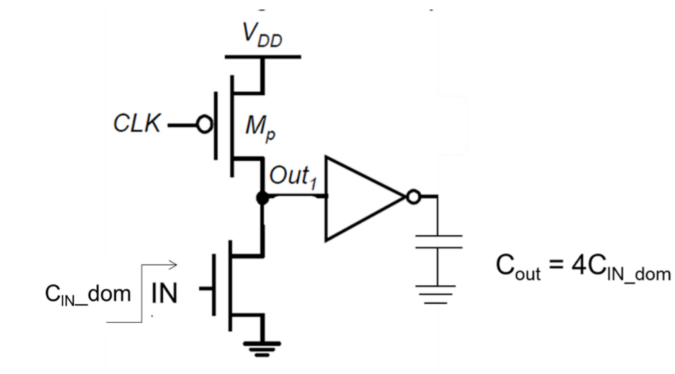

Figure 3: Domino Logic

Simulate the above schematics and stimuli using the ASAP 7nm environment to justify your responses. Assume a supply voltage of 0.7V in your simulations.

2 Problem

Below is a schematic of a positive edge-triggered Master-Slave Flip-Flop (Register) using CMOS Transmission Gates. Size transistors of this Flip-Flop using the primary design criterion of circuit speed, switching power and cost (area) we discussed in class:

- *Small Clock Load:* Minimum geometry pass gate devices, inverter driven by the clock
- *Fast Din → Dout path:* Low R Pass gates: Low VT pass gate transistors along the path

Setup the schematic using the ASAP 7nm environment and show circuit simulations of your design of the Flip-Flop that

(i) Minimize Clock→Q delay

(ii) Estimate Setup and Hold Time

(iii) Switching energy consumed in a clock cycle (total area under power supply current in a transient simulation during a clock cycle × VDD)

(iv) Leakage power (total area under power supply current when clock is inactive × VDD)

(v) How does Setup and Hold Time change if you (a) raise or lower VDD (b) raise or lower T

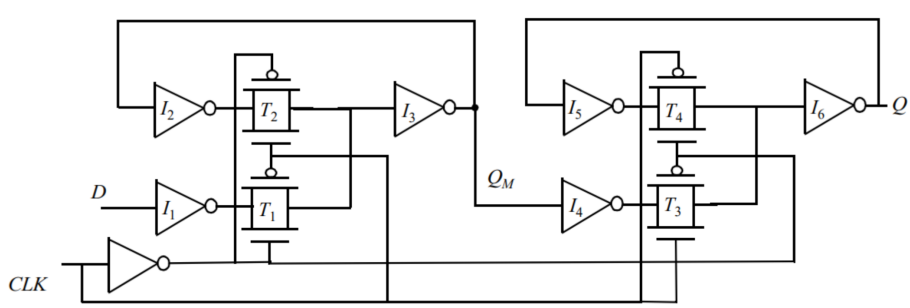

Figure 4: Flip-Flop

Simulate the above schematic and stimuli using the ASAP 7nm environment to justify your responses in (i) - (v). Assume a supply voltage of 0.7V and not 2.5V in your simulations.

This assignment has a firm deadline (check BrightSpace). No late submissions will be accepted.