# Design Compiler NXT

## Introduction:

This tutorial provides a step-by-step guide to using Synopsys Design compiler, one of the most widely used tools for logic synthesis in digital design. Synthesis is a crucial phase in digital design, transforming a high-level description of a cricut, typically written in HDL like Verilog, SystemVerilog or VHDL, into a gate-level netlist. A simple design is uploaded to brightspace, please download and import the design folder to fastX3.

Main steps in Synthesis Flow:

- Specify libraries
- Read RTL
- Applying timing Constraints
- Synthesize the design
- Generate the reports and save the results

## Specify libraries:

1. Unzip the folder, you will see multiple subfolders. Change the directory to lab1. The **setup.tcl** file sources the **rm_setup/dc_setup.tcl** file which in turn sources the **rm_setup/common_setup.tcl** file.
2. As a first step we will modify the **common_setup.tcl** file as it contains user defined variables which specify library and technology files.
3. In **ADDITIONAL_SEARCH_PATH** specify the **rtl** and **scripts** directory, for **TARGET_LIBRARY_FILE**S specify the corresponding db files, and similarly for **NDM_REFERENCE_LIBS**, your **common_setup.tcl** file should look like this:

```
set PDK_DIR "/ip/synopsys/saed32/v02_2024"

set ADDITIONAL_SEARCH_PATH   "$PDK_DIR/lib/stdcell_lvt/db_nldm $PDK_DIR/tech/tf $PDK_DIR
/tech/starrc/max $PDK_DIR/tech/starrc $PDK_DIR/temporary_ndm ./rtl ./scripts"  ;

set TARGET_LIBRARY_FILES     "saed32lvt_ss0p75v125c.db"      ;#  Logic cell library file
s

##########################################################################################
##
# User-defined variables for physical library setup in dc_setup.tcl
##########################################################################################
##

set NDM_DESIGN_LIB           "TOP.dlib"                 ;#  User-defined NDM design libr
ary name

set NDM_REFERENCE_LIBS       "saed32_lvt.ndm"                ;#  NDM physical cell libr
aries

set TECH_FILE                "saed32nm_1p9m.tf"              ;#  Technology file

set TLUPLUS_MAX_FILE         "saed32nm_1p9m_Cmax.tluplus"    ;#  Max TLUPlus file

set MAP_FILE                 "saed32nm_tf_itf_tluplus.map"   ;#  Mapping file for TLUplu
```

4. Will discuss each file during the tutorial. Make sure you saved and closed the **rm_setup/common_setup.tcl** file from the previous task.
5. Make sure you are still in the lab1 folder and invoke the DC NXT in Topographical mode using the command: dcnxt_shell -topo -gui
6. You should be able to see the GUI without any error. If you see any error at this point reachout to me via email: Charan Chintha
7. We still haven't specified the setup.tcl file which sources the **rm_setup/dc_setup.tcl** file. Execute the command from the same terminal you launched the tool or you can run these command from the input area at the bottom of the GUI: source setup.tcl
8. You should not see any error at this point if you do then modify the **common_setup.tcl**:

```
dcnxt_shell-topo> source setup.tcl
Information: Loading technology file '/home/cc8473/Documents/DC/ref/tech/saed32nm_1p9m.tf' (FILE
Via regions for library saed32_lvt|saed32_lvt_std created successfully
Via regions for library saed32_lvt|saed32_lvt_lsup created successfully
Via regions for library saed32_lvt|saed32_lvt_lsdn created successfully
Via regions for library saed32_lvt|saed32_lvt_pg created successfully
Saving library 'TOP.dlib'
Information: Using the 'create_lib' command has enabled NDM mode for the current Design Compiler
Information: Incrementing open_count of library 'TOP.dlib' to 2. (LIB-017)

================================================================

Library Settings:
search_path:              . /eda/synopsys/syn/U-2022.12-SP7-3/libraries/syn /eda/synopsys/syn/U-
link_library:             * saed32lvt_ss0p75v125c.db
target_library:           saed32lvt_ss0p75v125c.db
physical libraries:       saed32_lvt.ndm
physical design library:  TOP.dlib

================================================================
dcnxt_shell-topo>
```

## Read Design(RTL):

1. Since setup is completed the next step is to read the rtl file. Depending on the type of file specify the format as shown below (enter only one of the following):
   a. analyze -f verilog TOP.v
   b. analyze -f vhdl TOP.vhd
2. After reading the rtl file, elaborate the design by specifying the TOP module name.If name of the top module is **TOP** itself
   a. elaborate TOP
3. Now you should be able to see the modules in the ***Logical Hierarchy*** pane at the upper-left of the GUI, there is a T icon called TOP, which is the top-level and there are icons for the lower level hierarchical (H) instances as shown below:

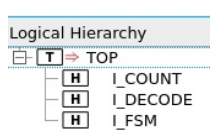


4. Use the following commands to list the libraries and designs:
   a. list_libs

```
dcnxt_shell-topo> list_libs
Logical Libraries:
---------------------------------------------------------------------------
Library         File                    Path
-------         ----                    ----
  saed32lvt_ss0p75v125c saed32lvt_ss0p75v125c.db /home/cc8473/Documents/DC/ref/DBs
  gtech         gtech.db                /eda/synopsys/syn/U-2022.12-SP7-3/libraries/syn
  standard.sldb standard.sldb           /eda/synopsys/syn/U-2022.12-SP7-3/libraries/syn
1
dcnxt_shell-topo> list_designs
COUNT   DECODE  FSM     TOP (*)
```

b. list_designs

5. It is always a good practice the design as an unmapped ddc file at this step. Remember that we still haven't applied any constraints to our design, if we had applied the cons then we will save it to the mapped folder. For now execute this command:
   a. write_file -hier -f ddc -output ./unmapped/TOP.ddc
6. Let us explore the GUI. Select the TOP module from the Logical Hierarchy and click on this symbol , this will expand the schematic as shown below:

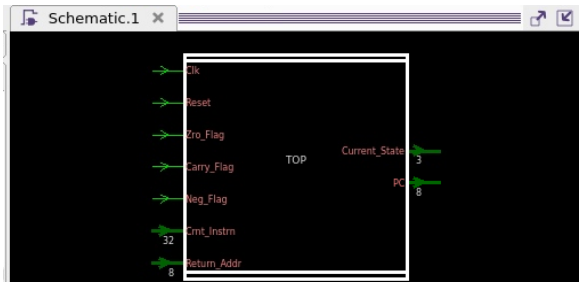


7. Double click on the **TOP** to display the schematic of the first level of hierarchy inside **TOP**, containing the instances of sub-designs **FSM, DECODE** and **COUNT**. Maximize the schematic window . Now there are two tabs, you can double click on each instance to expand the hierarchy. Zoom in and Zoom out by scrolling the mouse scroll.

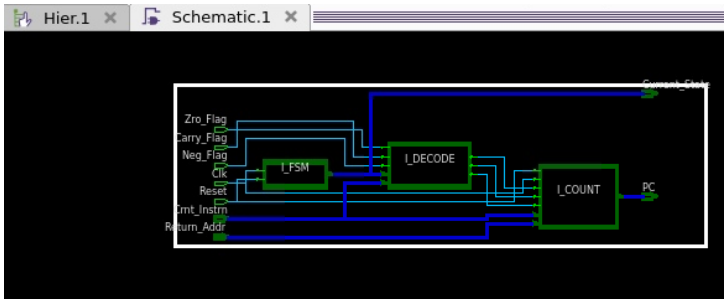


8. If you expand the **I_DECODE** and zoom to transistor level you will see that each transistor is labeled as **GTECH**, the reason is after an elaborate stage the design uses the gtech library but not the standard cell library. The design will be mapped with a standard cell library after applying the constraints and compiling the design.
9. Zoom out of the design by hitting F on your keyboard and close the schematic but keep the GUI open.
10. Before we apply the constraints, let's specify the Preferred routing direction. This step is not mandatory but the tool will throw a warning saying no routing direction is specified, to avoid those warning we are specifying the routing direction as shown below:
    a. set_preferred_routing_direction -layers {M1 M3 M5 M7 M9} -direction horizontal
    b. set_preferred_routing_direction -layers {M2 M4 M6 M8 MRDL} -direction vertical

## Apply Timing Constraints:

- Verify that the current design is **TOP** by executing the following command:
  - current_design
- Source the constraints to the design by sourcing the SDC file.
  - source TOP.con
- The **TOP.con** file is inside the scripts directory but we don't need to specify the path here as we already specified the path in the **search_path** application variable.

## Synthesize Design:

1. It is time for much awaited step, perform synthesis by entering the following command:
   a. compile_ultra
2. Watch the log by increasing the size of the terminal from which you launched the **dcnxt_shell**, you might see different warnings, optimization tables and metrics like area, timing violations, design rule cons (DRC).
3. You will notice that Schematic window might disappear after the compile, to view the schematic click on **TOP** and select the schematic menu as mentioned in step 6 from the Read Design section.
4. Expand the hierarchy by double clicking on the top module in the schematic. Zoom in to one of the blocks in the schematic you will no longer see **GENERIC** instead a cell name from the library will be displayed.
5. After applying the constraints and performing Synthesis the tool will map the standard cells to the design. Close the schematic (not GUI).
6. The reason we don't see hierarchy is **compile_ultra** has automatically flattened or ungrouped the sub-designs **DECODE, FSM** and **COUNT**.

## Generate Reports:

1. Report all the violations by entering the following command:
   report_constraints -all_violators
2. Generate a more detailed timing report by entering the following command:
   report_timing
3. Generate an area report:
   report_area
4. You might see few violations and errors after generating the reports. Let us visualize the paths with violations.
5. Click on the Create Path Slack Histogram icon , a form appears and click **OK**. Select the **left-most red bin**, and on the right, **right-click the top-most endpoint** and right click and select **Path Schematic**. A new schematic window displays the logic between the start- and endpoint of the path. This way we can visualize the paths with violations.

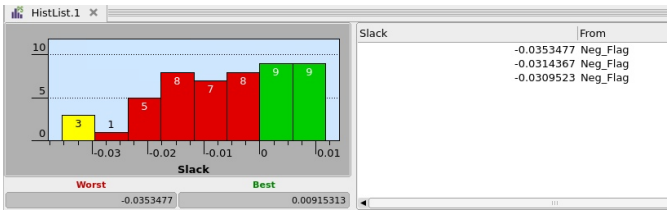


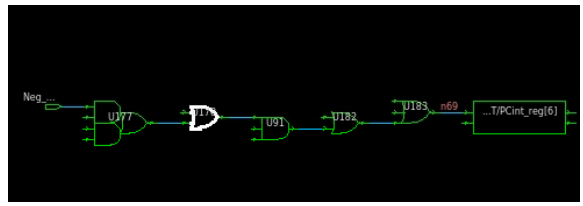

6. Close the schematic and histograms. Update the **TOP.con** file to fix the timing violation. Update the clock period based on the timing violation and source the **TOP.con** file again and run the synthesis using **compile_ultra** command.
7. Check if you meet the timing requirements by generating the timing report. You can generate the power report using the command **report_power**

## Save the Design:

1. Select **File -> Save As -> mapped**
2. Specify the file name as **TOP.ddc** (also the default format is DDC, do not change it).
3. Make sure **Save all designs in the hierarchy** button is checked, this will save the entire design hierarchy into a single file and click **Open.**
4. Alternatively we can save the design by running the command(similar to unmapped file at beginning):

   write -hierarchy -format ddc -output lab1/mapped/TOP_netlist.ddc
5. If you want the output netlist in verilog format run the following command:

   write -format verilog -hierarchy -output TOP_netlist.v
6. Here the **TOP.ddc** file inside the mapped folder is out Gate-Level Netlist. You can verify by using the ls command.
7. If you are using Synopsys IIC2 for physical design you can save the output as ASCII format: write_icc2_files -output ./mapped/TOP_icc2

## References:

1. *Synopsys, Inc: The design files used in this tutorial are sourced from the Synopsys website. These files provide practical examples for demonstrating synthesis, timing analysis, and optimization techniques. For more details on accessing the sample design and related resources, visit the official Synopsys documentation or sample resources page at Synopsys.*
2. *Synopsys, Inc. "Design Compiler Reference Manual." This manual offers in-depth explanations of commands, features, and methodologies related to design synthesis and compilation using Design Compiler.*