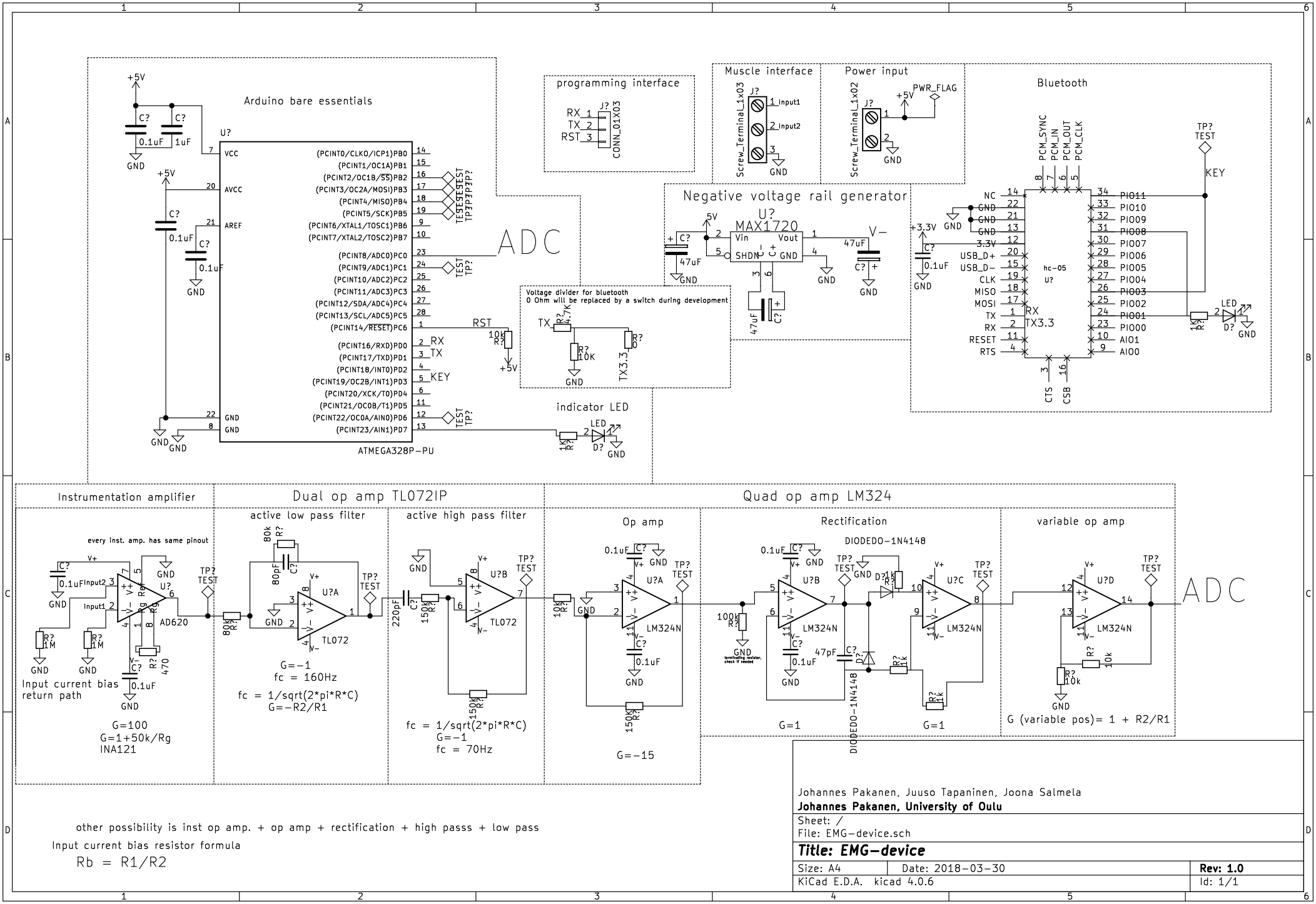
Arduino bare essentials
ATMEGA328P-PU
ADC
programming interface
CONN_01X03
Muscle interface
Screw_Terminal_1x03
Power input
Screw_Terminal_1x02
PWR_FLAG
Bluetooth
hc-05
Negative voltage rail generator
MAX1720
Voltage divider for bluetooth
0 Ohm will be replaced by a switch during development
indicator LED
Instrumentation amplifier
every inst. amp. has same pinout
AD620
Input current bias return path
G=100
G=1+50k/Rg
INA121
Dual op amp TL072IP
active low pass filter
G=-1
fc = 160Hz
fc = 1/sqrt(2*pi*R*C)
G=-R2/R1
active high pass filter
TL072
fc = 1/sqrt(2*pi*R*C)
G=-1
fc = 70Hz
Quad op amp LM324
Op amp
LM324N
G=-15
Rectification
DIODEDO-1N4148
G=1
variable op amp
G (variable pos)= 1 + R2/R1
other possibility is inst op amp. + op amp + rectification + high passs + low pass
Input current bias resistor formula
Rb = R1/R2
Johannes Pakanen, Juuso Tapaninen, Joona Salmela
Johannes Pakanen, University of Oulu
Sheet: /
File: EMG-device.sch
Title: EMG-device
Size: A4
Date: 2018-03-30
Rev: 1.0
KiCad E.D.A. kicad 4.0.6
Id: 1/1