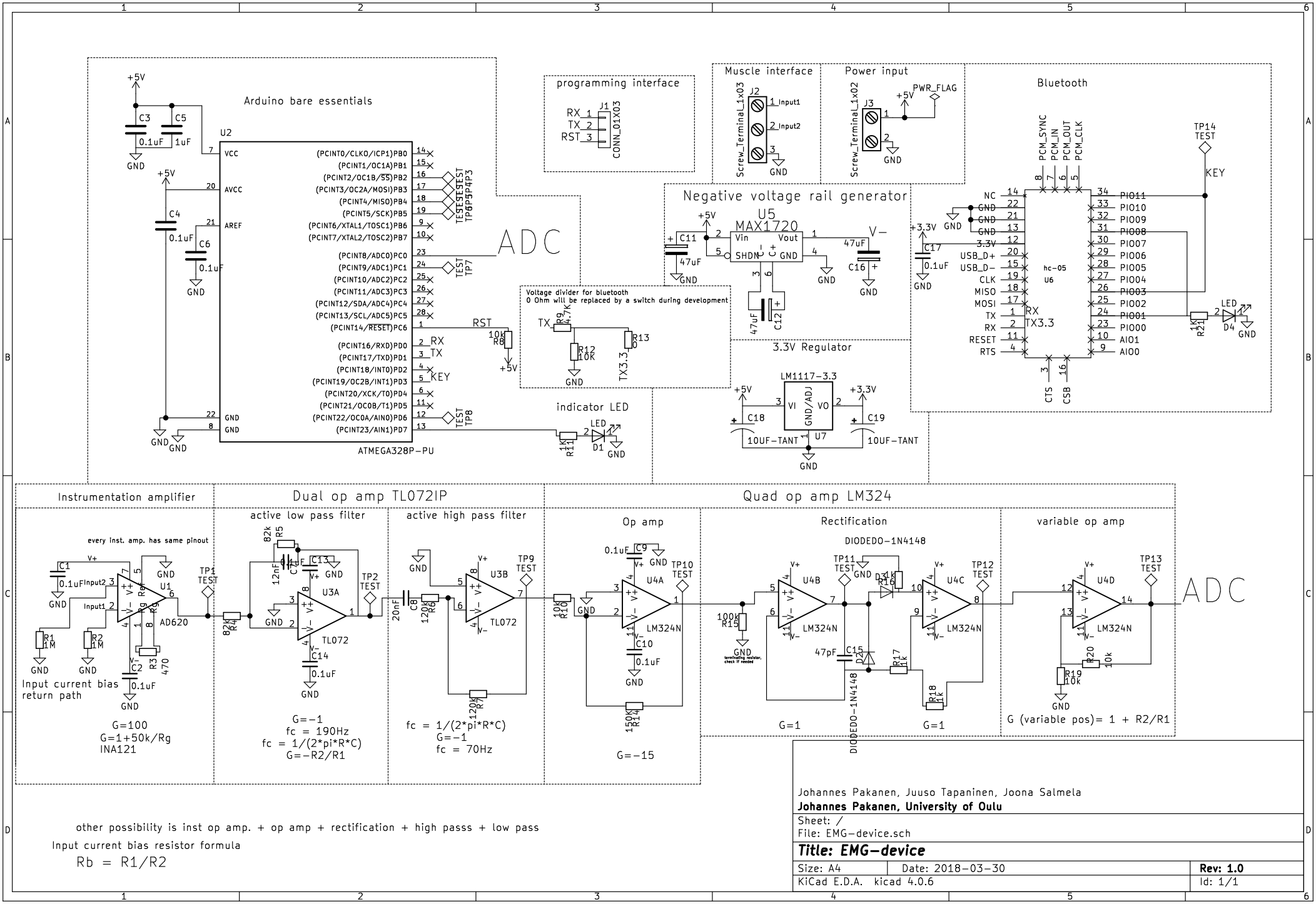

other possibility is inst op amp. + op amp + rectification + high passs + low pass

Input current bias resistor formula

Rb = R1/R2

Johannes Pakanen, Juuso Tapaninen, Joona Salmela
Johannes Pakanen, University of Oulu

Sheet: /
File: EMG-device.sch

Title: EMG-device

Size: A4	Date: 2018-03-30	**Rev: 1.0**
KiCad E.D.A. kicad 4.0.6		Id: 1/1