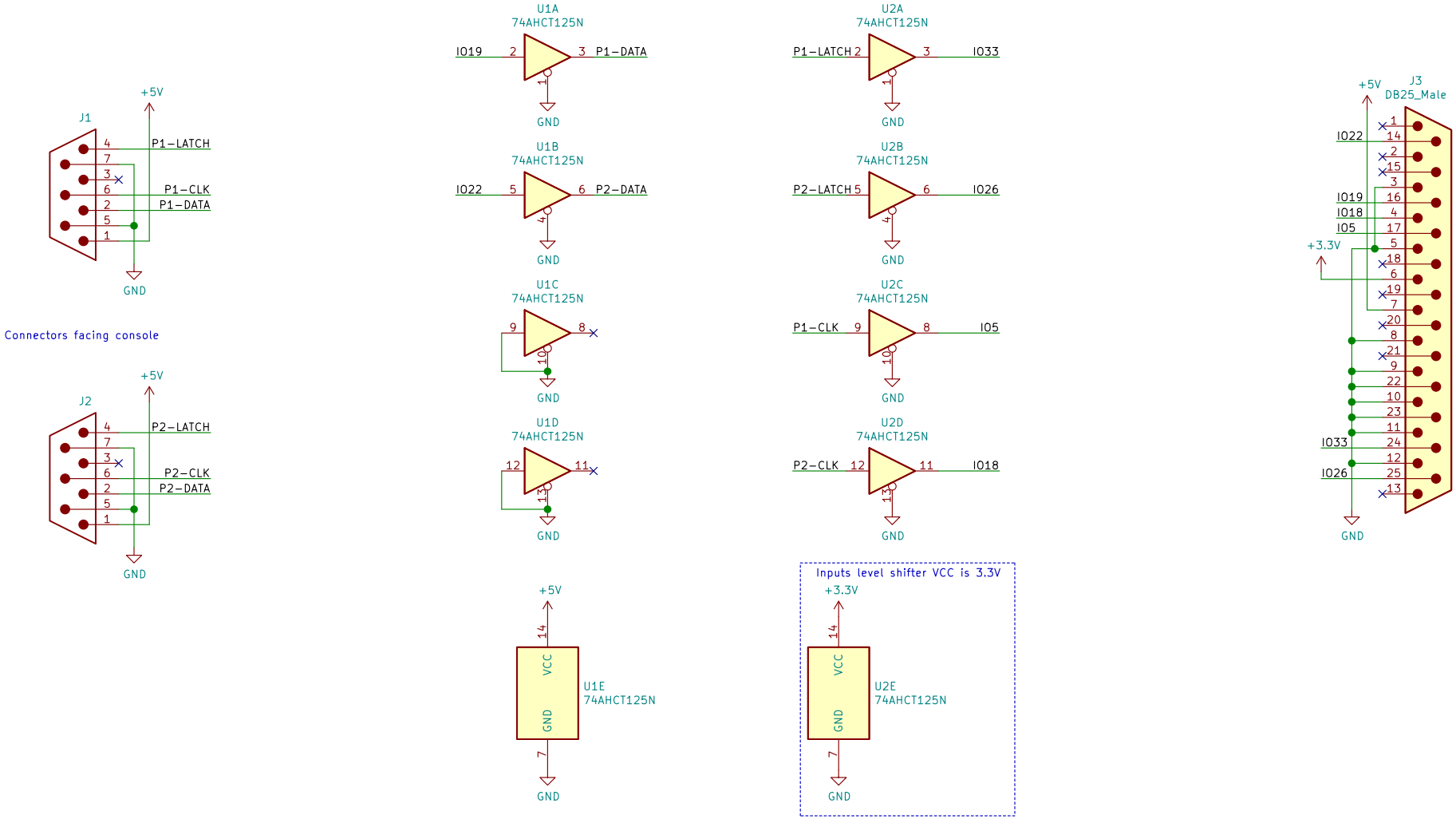

* Very important for DB25 pin 22 (I39/VN) to be connect to GND for proper system detection.

©2021 Jacques Gagnon, licensed under CC-BY-4.0

Sheet: /PCFX/
File: PCFX.sch

Title: BlueRetro – PC-FX adapter cable

Size: USLetter	Date: 2021-04-11	Rev: v1.1
KiCad E.D.A. kicad (5.1.6)-1		Id: 13/15