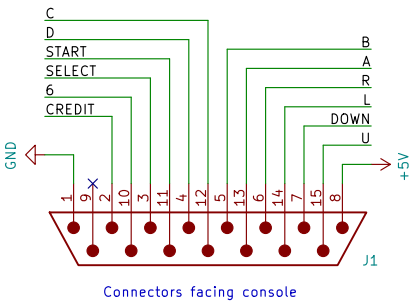

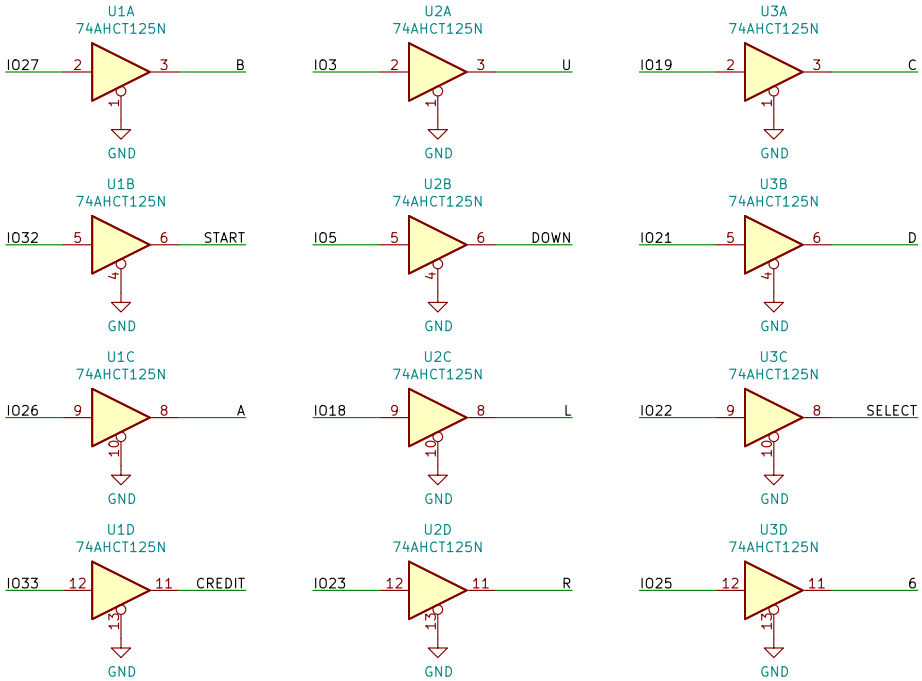

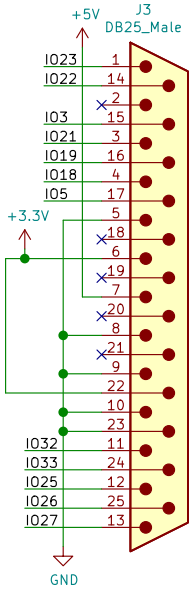

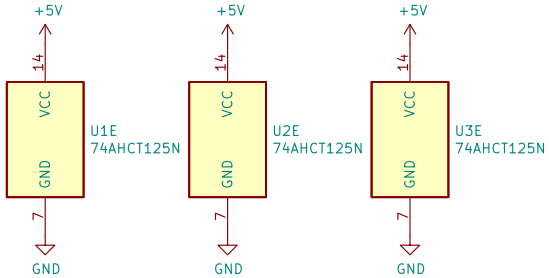

©2020–2022 Jacques Gagnon, licensed under CC–BY–4.0

Sheet: /Para1P_PP/
File: Para1P_PP.sch

Title: BlueRetro – Parallel 1P Push–Pull adapter cable

Size: USLetter	Date: 2022–01–30	Rev: v1.1
KiCad E.D.A. kicad (5.1.9)–1		Id: 10/20