Higher National Diploma in Engineering (Electrical)

First Year, Second Semester Examination - 2020

EE1208-ELECTRICAL PRINCIPLES B

Answer any 5 questions Time : 3 hours

Question 1

(i) What is the difference between a **correctly terminated transmission line** and an **incorrectly terminated transmission line**? (2 marks) **(ii)** Generally, transmission line equations for voltage and current for an **incorrectly terminated transmission line** are given as:

$$V(x) = \left(\frac{V_s - I_s Z_0}{2}\right) e^{\gamma x} + \left(\frac{V_s + I_s Z_0}{2}\right) e^{-\gamma x}$$

$$I(x) = \frac{\left(I_s - \frac{V_s}{Z_0}\right)}{2} e^{\gamma x} + \frac{\left(I_s + \frac{V_s}{Z_0}\right)}{2} e^{-\gamma x}$$

Define all parameters used in the above equations with the **transmission line constants** and state the **forward travelling wave component** and **backward travelling wave component**. (3 marks) **(iii)** Derive **input impedance,** Z_{in} of an **incorrectly terminated transmission line**. (3 marks) **(iv)** From the above equations, obtain the **voltage and current relationship** for a **correctly terminated transmission line**. (2 marks) **(v)** Define the **reflection coefficient** (ρ_R) and **standing wave ratio** (s) for an **incorrectly terminated transmission line** in terms of load impedance (Z_L) and characteristic impedance of the line (Z_0). (2 marks)

(b) An **air insulated loss free line** of length $\lambda/6$ has an inductance of $83.33\ \mathrm{nH}$. It operates at a frequency of $100\ \mathrm{MHz}$. It is terminated in an impedance of $\mathbf{Z_L}$. The measured **input impedance** (Z_{in}) is $(30 + \mathrm{j}15)\ \Omega$. Calculate: **(i)** the value of β **(ii) characteristic resistance** $\mathbf{R_0}$ of the line **(iii)** the **time delay** introduced by the line **(iv)** the value of $\mathbf{Z_L}$ **(v) reflection coefficient,** ρ_R **(vi) standing wave ratio,** s (8 marks)

Question 2

(a) Define the following terms related to a network graph: **(i) Oriented Graph (ii) Cut-set Matrix (iii) Tie set Matrix** (5 marks)

(b) For the circuit shown in Fig. Q2(a) : **(i)** Draw the **oriented graph** of the network. Here 1, 2, 3, 4, 5 and 6 are indicated as the numbers of the branches. (2 marks) **(ii)** Select **1, 2 and 5 branches as twigs**, draw the **tree diagram** and write the **cut-set matrix,** C. (4 marks) **(iii)** Determine the **current balance equation** for the circuit. (3 marks)

(c) For the circuit given in Fig. Q2(b) , obtain the **node voltages** V_A, V_B **and** V_C by using **nodal equations**. (Resistor values are in ohms) . (6 marks)

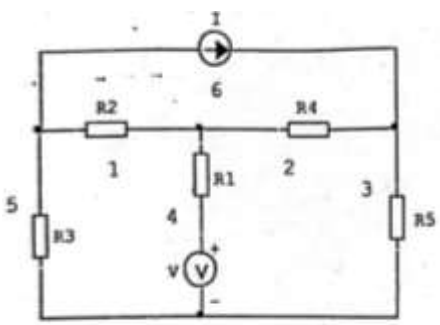

Fig. Q2(a)

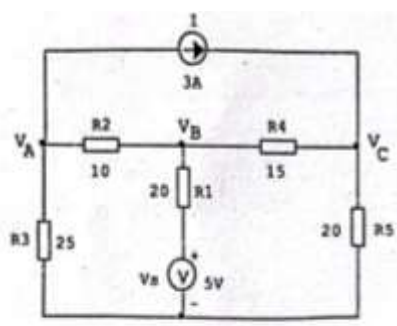

Fig. Q2(b)

Question 3

(a) For the circuit shown in Fig. Q3(a) , determine:

(i) Z-parameter (ii) Y-parameter (iii) ABCD parameter for this network. (Here impedances are in ohms, Ω) 25 (12 marks)

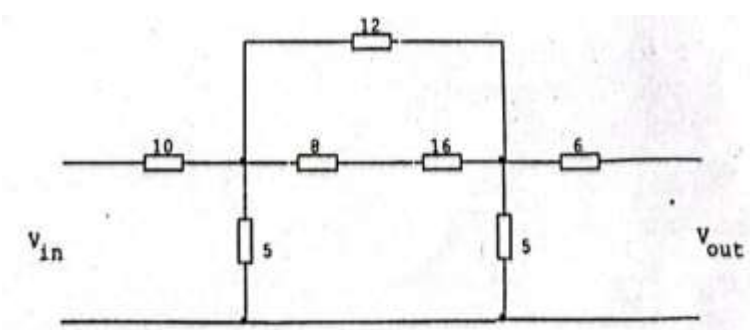

Fig. Q3(a)

(b) A **band pass filter** is comprised of a **low pass π-section filter** having a cut-off frequency of $50\ \mathrm{kHz}$, connected in series with a **high pass π-section filter** having a cut-off frequency of $40\ \mathrm{kHz}$. The terminating impedance of the filter is $620\ \Omega$. Determine the **values of components** comprising the composite filter. (5 marks)

(c) State **filter design techniques** briefly with the illustration of a **Gain Vs Frequency plot**. (3 marks)

Question 4

(a) A $10\ \mu F$ **capacitor** is discharged suddenly through a coil having an **inductance of $4\ \mathrm{H}$** and a **resistance of $400\ \Omega$**. The capacitor is initially charged to a voltage of $20\ \mathrm{V}$. Find: **(i)** an **expression for the current (ii)** the **additional resistance** required to give **critical damping**. (6 marks)

(b)

(i) Briefly explain the **causes for the generation of surges** in the overhead transmission lines. **(ii)** State the **effects of surges** on the transmission line. **(iii)** What is the **basic impulse level**? **(iv)** State the **operation of a lightning arrester or surge diverter**. (8 marks)

(c) A **magnetic circuit** of uniform cross sectional area $2.5\ \mathrm{cm}^2$ is shown in Fig. Q4(c)(i) . The **cast steel core** has a mean length of $25\ \mathrm{cm}$. The **air gap** is $1\ \mathrm{mm}$ wide and the coil has 5000 turns. The **B-H curve for cast steel** is shown in Fig. Q4(c)(ii) . Determine: **(i)** the **reluctance of the core and air-gap (ii)** the **current in the coil** to produce the flux density of $1.05\ \mathrm{T}$ in the air gap , assuming that all the flux passes through both parts of the magnetic circuit. (6 marks)

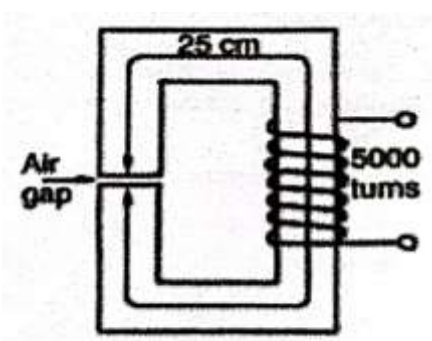

Fig. Q4(c)(i)

Question 5

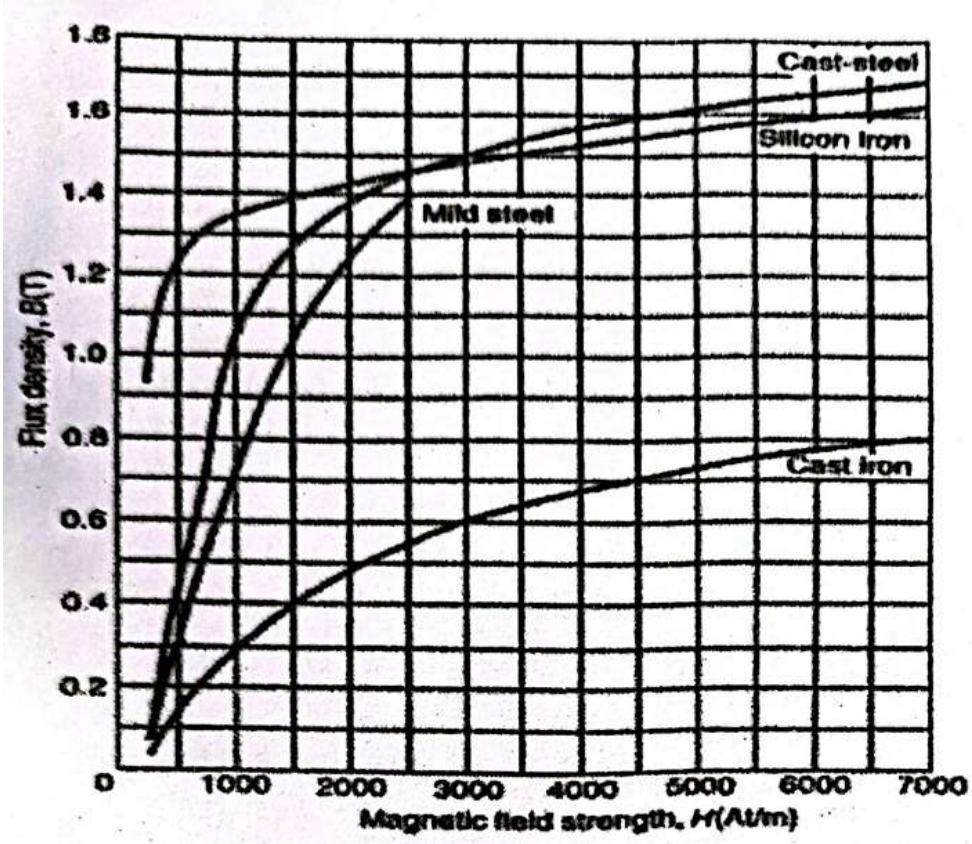

B–H curves for four materials

Fig. Q4(c)(ii)

(i) What are **electromagnetic waves**? (2 marks) **(ii)** Distinguish between **conduction current and displacement current**. (2 marks) **(iii)** Write any three **properties of electromagnetic waves**. (3 marks) **(iv) (i)** Represent **electric and magnetic fields** of an **electromagnetic wave mathematically** by suitable **wave equations**. Express **propagation velocity,** c of electromagnetic waves in free space in terms of ϵ_0 and μ_0. (3 marks) **(ii)** A **plane electromagnetic wave** propagating in a **nonmagnetic medium** is specified by its magnetic field, $\mathbf{H} = \mathbf{25}\sin(\mathbf{2} \times \mathbf{10^8 t} + \mathbf{6x})\ \mathrm{a_y},\ \mathrm{mA/m}$ and the **intrinsic impedance** of the medium is $\mathbf{200\ \Omega}$. Determine: **(i)** the **direction of wave propagation**. **(ii)** the **phase change coefficient,** β **(iii)** the **wave length,** λ **and frequency,** f. **(iv)** the **relative permittivity** (ϵ_r) and **permeability** (μ_r) of the medium. **(v)** the **electric field intensity** and **time average power** carried by the wave. (10 marks)

Question 6

(a)

(i) A simple electromagnetic relay (Hinged Armature Type) is shown in Fig. Q6(a)(i) . Briefly explain the operation of the relay. And also state the order of energy conversion in this device. (3 marks)

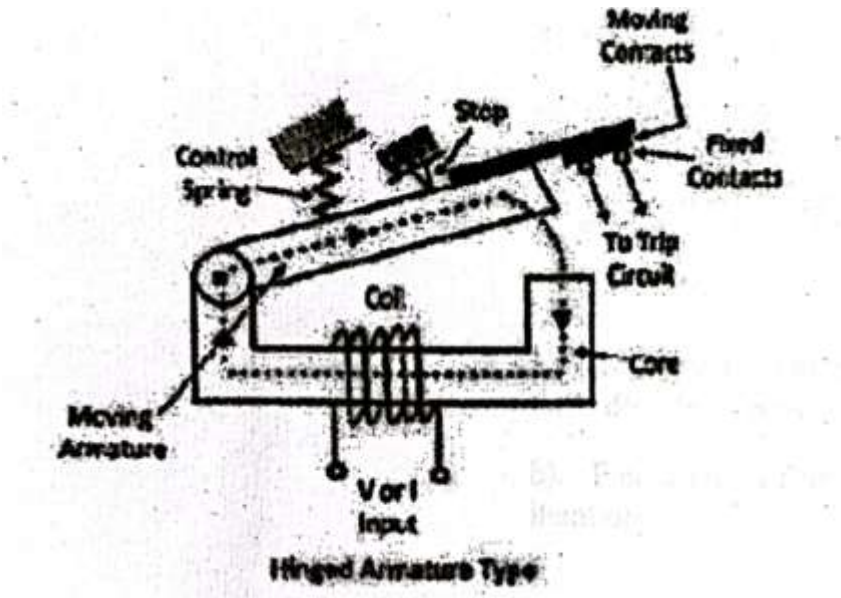

Fig.Q6(a)(i)

(ii) Write down the energy balance equation for motor action. From this energy balance equation written by you, derive the power balance equation. (3 marks)

(b)

(i) Draw the power flow diagram of a cage rotor induction motor. And state the condition for maximum efficiency of an induction motor. (3 marks)

(ii) A cage rotor induction motor consumes 500 Watts of electricity to drive the load. Fixed losses of the motor are 30 Watts. Obtain the maximum efficiency of the motor. (2 marks)

(c)

(i) What do you mean by attenuation in an optical fiber? (1 mark)

(ii) Why does attenuation take place in optical fiber communication? (2 marks)

(iii) State four applications of optical fiber in different fields. (2 marks)

(d)

(i) Write down the equation for **normalized frequency** (V) and **total number of guided modes** (M) in a **multimode fiber**. (2 marks) **(ii)** A **multimode step index fiber** with a **core diameter** of $100\ \mu\mathrm{m}$ and a **relative index difference** of 0.012 is operating at a **wavelength** of $0.8\ \mu\mathrm{m}$. If the **core refractive index** is 1.5, estimate: **(I) normalized frequency** for the fiber **(II)** the **number of guided modes** (2 marks)