Higher National Diploma in Engineering

Second Year, Second Semester Examination – 2022

EE2207 Electronics Circuits and Systems

Answer five questions only. **Time: 3 hours**

Question 1

(a). Simplify the Boolean expression $P = \overline{AC}(\overline{ABD}) + \overline{A}B\overline{CD} + A\overline{BC}$ using de Morgan's theorem and linear algebra.

(b). It is required to design a combinational logic circuit to implement a multi-function gate. This circuit has two select-inputs (**X** and **Y**) to choose the function, while the other two data inputs (**A** and **B**) take the data on which the chosen function is to be implemented. The table in Figure Q1 (b) shows the exact states of select inputs (X and Y) for different functions, and corresponding output **F**.

i. Draw the truth table for the logic circuit that needs to be designed. (02 Marks)
ii. Write down the sum-of-products expression for output **F**. (02 Marks)
iii. Sketch the Karnaugh map and find the simplified expression. (02 Marks)
iv. Sketch the logic circuit for simplified expression. (02 Marks)

X	Y	Function	F
0	0	AND	A AND B
0	1	NAND	A NAND B
1	0	OR	A OR B
1	1	XOR	A NOR B

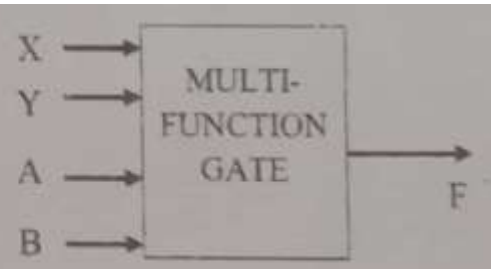

Figure Q1 (b)

(c). Needed to implement a logic circuit using a **programmable logic array (PLA)**. The circuit should give two output functions based on three data inputs **A**, **B**, and **C**. The output functions **F1** and **F2** are given below:

$$F1 = \overline{(AB + AC + BC)}$$

$$F2 = AB + AC + \overline{AB}C$$

(i). Sketch the PLA programming table. (04 Marks)

(ii). Show the PLA circuit implementation with a clear sketch. (04 Marks)

Question 2

(a). Discuss two differences between Combinational logic circuits and Sequential logic circuit systems. And, also, write two applications for each category.

(b)

i. In the circuit shown in Figure Q2.(b), initially all flip-flops are at reset (i.e. ABC=000). The same clock signal is simultaneously applied to all three FFs. Sketch the **state diagram**, showing the arrow directions clearly. (06 Marks)

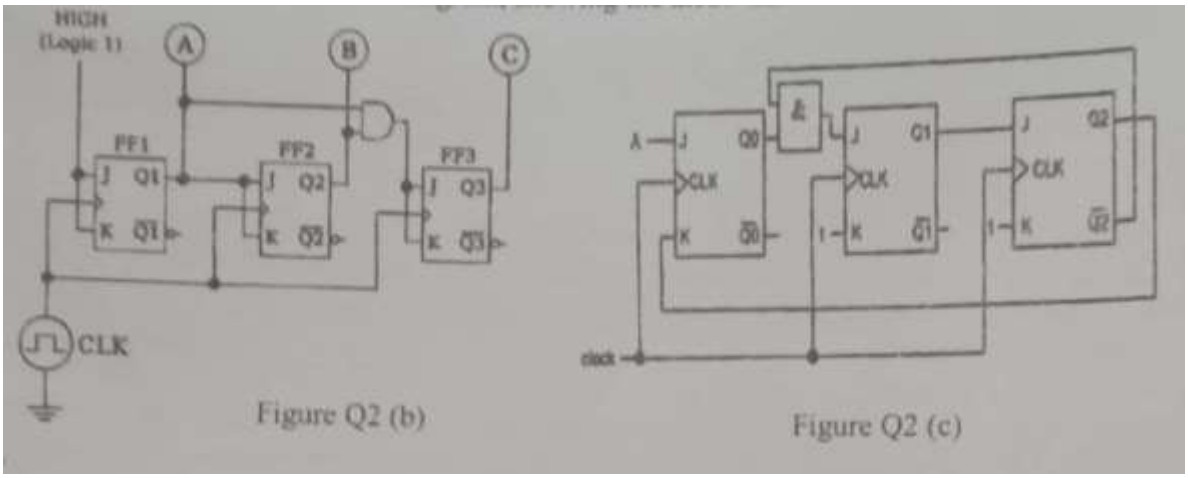

Figure Q2 (b)

Figure Q2 (c)

ii. In the circuit shown in Figure Q2 (c), note that **A** is the external input variable which can be 1 or 0, based on that, state transition is different. Initially, all flip-flops are at reset (i.e. $Q_2Q_1Q_0$=000). Sketch the **state diagram**, showing the arrow directions clearly. (06 Marks)

(c). Explain why the master-slave arrangement is used in sequential circuits.

Question 3

(a). Discuss the specific features of **synchronous counters** and **asynchronous counters**. (04 Marks)

(b). Figure Q3 (b) shows a block diagram of a synchronous **2-bit up/down counter**. It is needed to design the circuit given by the block diagram. When X=0 up count and X=1 down count.

i. Sketch the state diagram for the up/down counter. (02 Marks)
ii. Sketch the JK flip-flop truth table and transition table. (02 Marks)
iii. Sketch the state transition table (for the whole counter circuit). (04 Marks)
iv. Draw Karnaugh maps for each FF input, and find the simplified Boolean equation.(04 Marks)
v. For the simplified Boolean function, sketch the circuit diagram. (04 Marks)

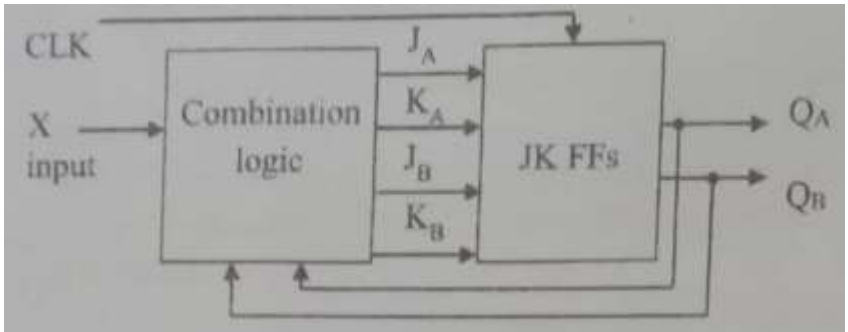

Figure Q3 (b)

Question 4

(a). Briefly explain encoders, decoders, multiplexers and demultiplexers. (04 Marks)

(b). It is needed to implement the following Boolean function using a suitable MUX:

$$F(A,B,C,D)=\sum \{1,3,4,11,12,13,14,15\}$$

i. Select the suitable MUX size (Number of data input lines and selection lines) mentioning the reason. (02 Marks)
ii. Sketch the implementation table. (04 Marks)
iii. Sketch the designed circuit. (02 Marks)

(c). Figure Q4 (c) shows an electronics circuit used in digital-analogue interfaces, where U1, U2, and U3 are comparators.

i. Using a table list down the priority encoder inputs $D_3D_2D_1D_0$ and priority encoder outputs Q_1Q_0 for the possible ranges of input voltage V_{in} .(04 Marks)
ii. Identify the name of the circuit. And, also, explain the **resolution**, and **conversion time** of this type of converter compared to other converters. (04 Marks)

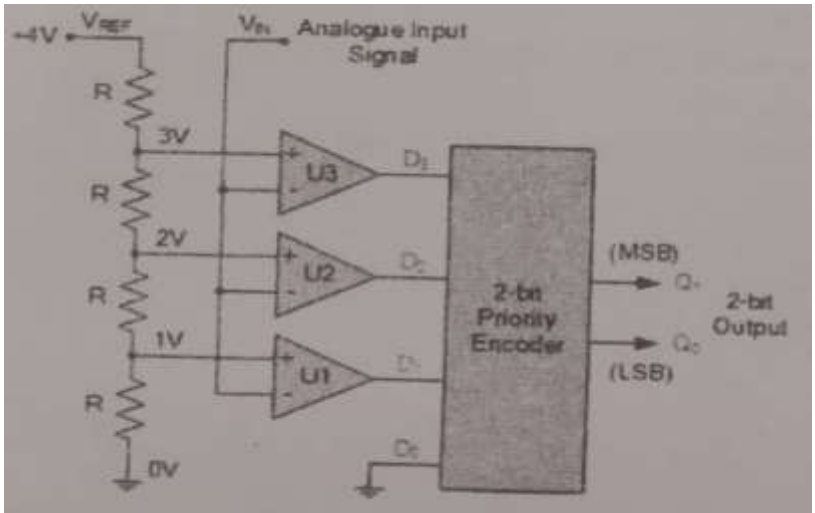

Figure Q4 (c)

Question 5

(a). Using suitable sketches, compare **parallel data transfer** and **serial data transfer** between registers. (04 Marks)

(b). A Block diagram of a synchronous sequential circuit is shown in the figure Q5(b). Sketch the state diagram and identify the **MOD number**. State the special name of this counter. (04 Marks)

(c). Figure Q5 (c) shows block diagram of a synchronous circuit.

i. Sketch the **3-bit binary counter** output state table. (02 Marks)
ii. Sketch the **3 x 8 decoder** input output truth table. (02 Marks)
iii. Explain the operation of the circuit by using the sketches. (04 Marks)
iv. Compare this circuit with an **8-state ring counter**. (04 Marks)

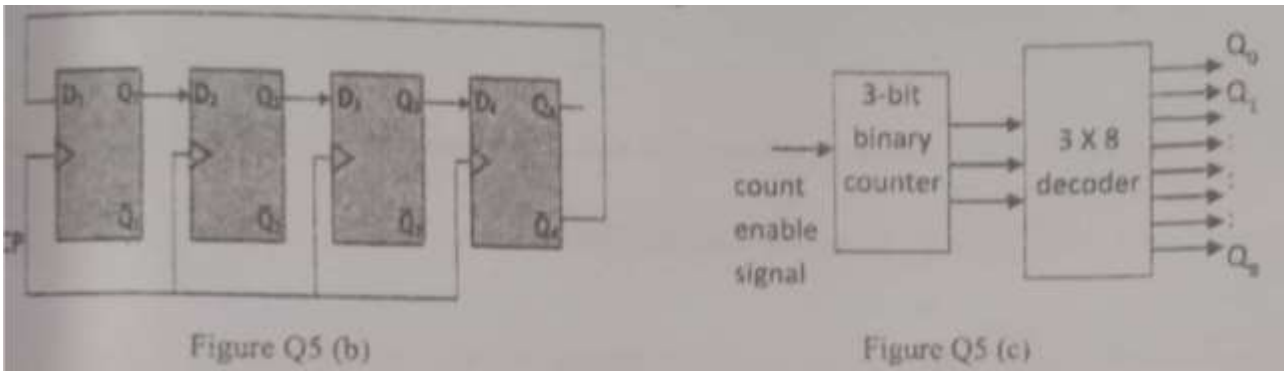

Figure Q5 (b) Figure Q5 (c)

Question 6

(a). CMOS logic gates take less chip area compared to TTL logic gates.

i. Sketch a clear diagram of a **2-input CMOS NAND gate**. (03 Marks)
ii. Explain the operation of the gate, you have sketched, identifying **on and off transistors** in output **HIGH** and **LOW** states. (03 Marks)

(b). Figure Q6 (b) shows a **TTL logic gate**.

i. Prepare a table identifying the **on and off states** of each transistor for all possible states of **A** and **B**. (03 Marks)

ii. Prepare a **truth table** for A, B and OUT. Hence, identify the **type of the gate**. (03 Marks)

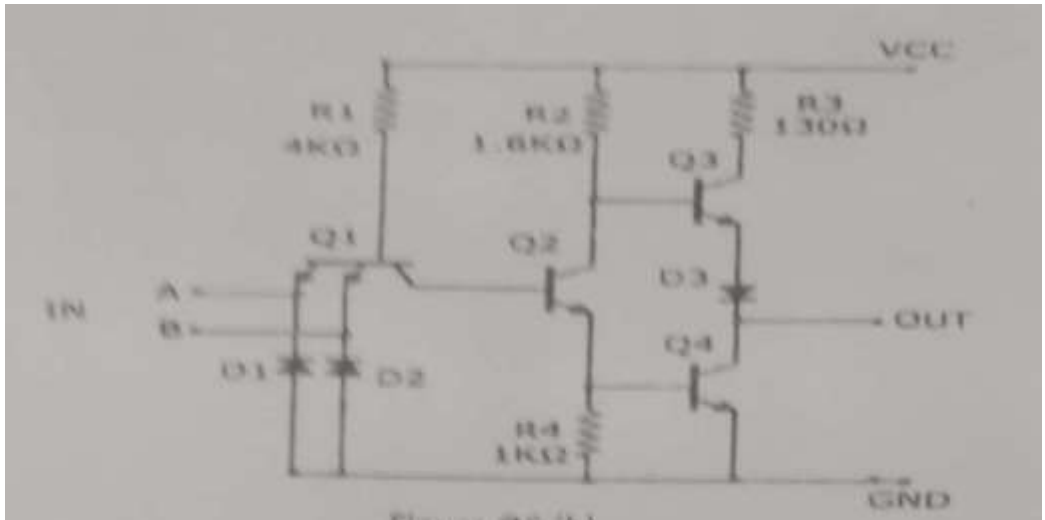

Figure Q6 (b)

(d). Memory.

- **(i).** Compare **DRAM** and **SRAM** for their features and performances. (04 Marks)
- **(ii).** How many **address inputs**, **data inputs**, and **data outputs** are required for a **16K x 12 memory**? (04 Marks)