Higher National Diploma in Engineering (HNDE), typically Electrical/Mechanical/Building Services

Second Year, Second Semester Examination – 2019

EE 2206 - Power Electronics

Answer any Five (05) questions **Time: 3 hours**

---

1. Question (Total 20 Marks)

I) Draw the V-I Characteristics of SCR in detail. (6 Marks)

II) Briefly explain following terms related to SCR:

a) Holding current (4 Marks)

b) Latching current (4 Marks)

III) Describe the advantages of using semiconductor devices as switch. (4 Marks)

IV) Briefly describe the free-wheeling diode with including its benefits. (6 Marks)

---

2. Question (Total 20 Marks)

I) Draw the power circuit diagram of single-phase half wave control rectifier with resistive load. (2 Marks)

II) Draw the output current wave for firing angle α and find the mathematical expressions for average load current in terms of V_m (Peak voltage), firing angle α and R (Resistance of load). (6 Marks)

III) A single-phase half wave diode rectifier is connected to a 240V, 60Hz supply and to a load.

a) If the load is pure resistive 10Ω, calculate the average load voltage and current. (6 Marks)

b) If the load is consisting of a 10Ω resistor in series with a 1H inductor, calculate the average load voltage and current (Conduction angle/Extinction angle chart is given in page 4). (6 Marks)

---

3. Question (Total 20 Marks)

An electric heater of 40Ω is supply from a 240V AC supply. A lossless inductor is connected in series with the heater to ensure ripple-free constant current through the heater. The heater power continuously variable between 100W and 1000W.

I) Prove that the necessary control can be achieved using a single-phase fully controlled rectifier. (10 Marks)

II) Find the range of firing angle required to accomplish the above task. (10 Marks)

---

4. Question (Total 20 Marks)

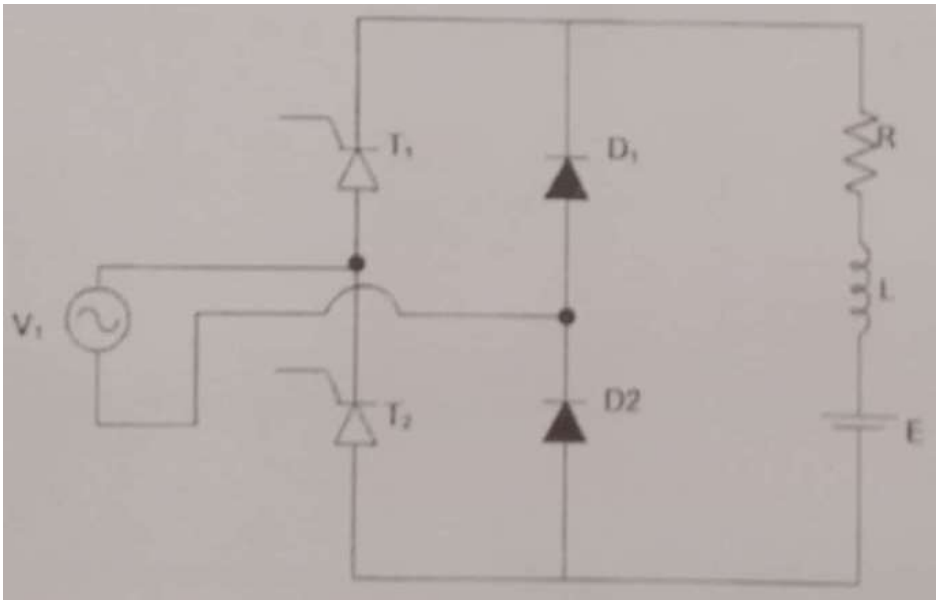

A Single-phase semi-converter fed battery charging circuit is shown in the above figure . If the supply voltage is 240V, R=10Ω resistor, the battery e.m.f is 100V, the firing angle of SCR is set to 60^0.

I) If inductor (L=0) value is zero, draw the output current wave form and find the average charging current through the battery (E). (10 Marks)

II) If the inductor value is very large, find the new average voltage and new average charging current through the battery (E). (10 Marks)

---

5. Question (Total 20 Marks)

I) Draw the power circuit diagram of three phase half wave-controlled rectifier with resistive load. (4 Marks)

II) If the above rectifier (I) is triggered by a constant AC signal, draw the voltage, current wave form and find the mathematical expressions for average output voltage in terms of V_m. (6 Marks)

III) Briefly explain if large inductance is connected series with resistance in circuit (II), then briefly describe what will be the average output voltage (V_{avg}). (2 Marks)

IV) If the above rectifier (I) is triggered by $\alpha=60^0$ (or $\alpha=90^0$ is written over it, suggesting a typo/choice), draw the output voltage wave form and find the mathematical expressions for average output voltage in terms of V_m. (6 Marks)

V) If large inductance is connected series with resistance at above (IV) circuit, draw the output voltage wave form and find the mathematical expression for average output voltage in terms of V_m. (2 Marks)

---

6. Question (Total 20 Marks)

A medium level solar power plant of 345V is supply power to a power system of 440V, 50Hz through a three phase fully controlled converter. A lossless inductor is connected in series with the solar plant to ensure ripple-free constant current. The solar plant resistance is 0.5Ω.

I) Draw the power circuit diagram and clearly indicate the current and voltage in the DC link. (5 Marks)

II) Find the mathematical expressions for average output voltage of three phase fully controlled converter in terms of V_m and firing angle α. (5 Marks)

III) Find the firing angle of the above solar plant converter. (10 Marks)

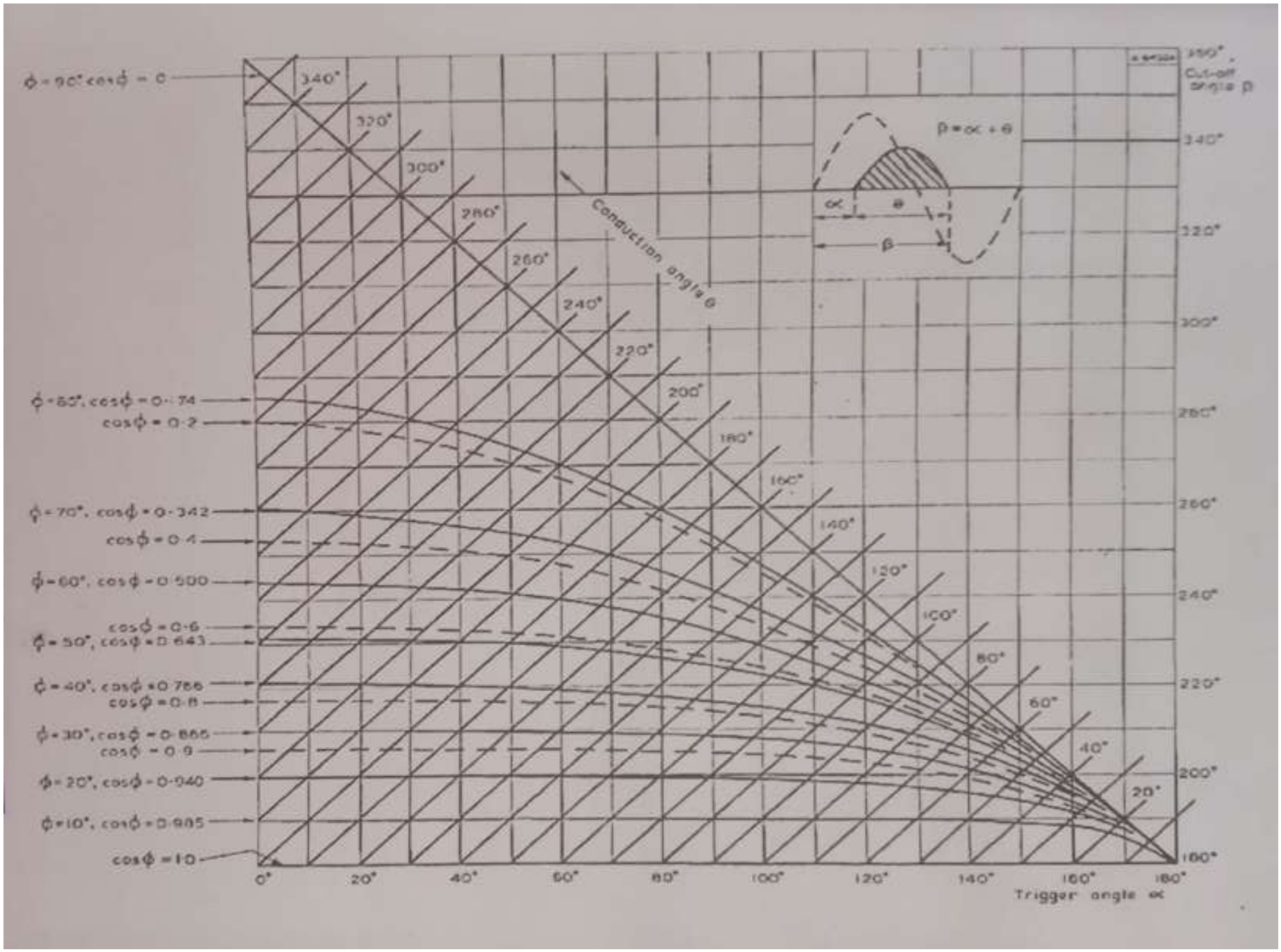
φ = 90° cos φ = 0
φ = 80°, cos φ = 0·174
cos φ = 0·2
φ = 70°, cos φ = 0·342
cos φ = 0·4
φ = 60°, cos φ = 0·500
cos φ = 0·6
φ = 50°, cos φ = 0·643
φ = 40°, cos φ = 0·766
cos φ = 0·8
φ = 30°, cos φ = 0·866
cos φ = 0·9
φ = 20°, cos φ = 0·940
φ = 10°, cos φ = 0·985
cos φ = 1·0
340°
320°
300°
280°
260°
240°
220°
200°
180°
160°
140°
120°
100°
80°
60°
40°
20°
Conduction angle θ
β = α + θ
α
θ
β
Cut-off angle β
0°
20°
40°
60°
80°
100°
120°
140°
160°
180°
Trigger angle α