Higher National Diploma in Engineering (Civil / Mechanical),

2nd Year, Second Semester Examination-2018

ME 2217-MECHANICS OF SOLIDS

Question 01.

a. What do you understand by an Airy stress function in two dimensions?

b. A beam of length L, with a thin rectangular cross section, is built-in at the end x=0 and loaded at the tip by a vertical force P. Show that the stress distribution can be represented by the expression $\varphi = Ay^3 + By^3x + Cyx$ as an Airy stress function and determine the coefficients A, B and C.

(Total marks 20)

Question 02.

A uniform bar has the elliptical cross section and is subjected to equal and opposite torques T at each of its free ends.

i. derive the expressions for the rate of twist in the bar,

ii. determine the shear stress distribution, and

iii. drive the warping displacement of its cross section.

iv. and also find the maximum shearing stress.

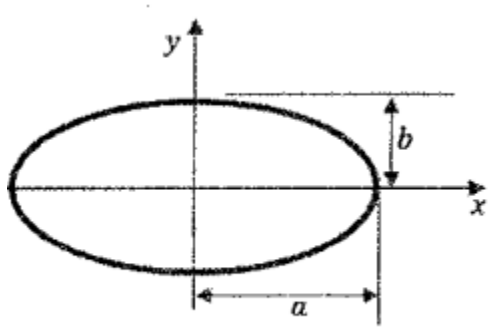

Fig 02.

(Total marks 20)

Question 03.

a. Show that the total strain energy of a beam subjected to bending is $U = \int \frac{m^2}{2El} dx$

where:

- M - Bending moment
- E - Modulus of Elasticity
- I - Second moment of area of the section

b. A cantilever beam AB is loaded with uniformly distributed load throughout its length. Calculate

i. the deflection at the free end

ii. deflection of a point C at a distant c from the free end.

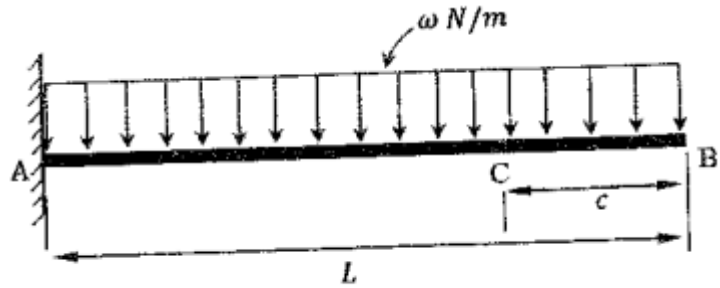

Fig. 03

(Total marks 20)

Question 04.

Three stepped bar is shown in Fig.04. Determine the following,

i. the displacement at nodes 2 and 3

ii. Stresses in the three sections

iii. Reactions at the ends

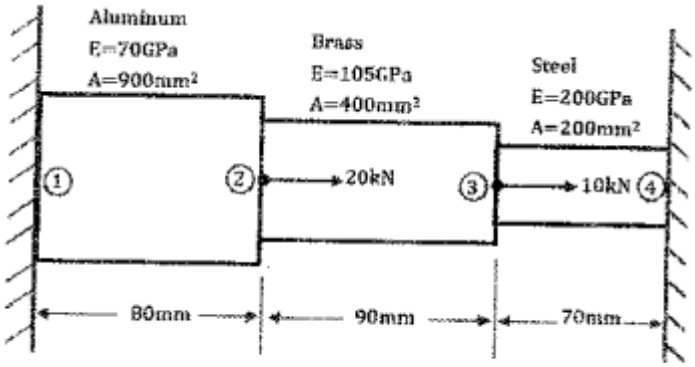

Fig 04

(Total marks 20)

Question 05.

Determine the **crippling load** for a **T-section** of dimensions 12cmx12cmx2cm and of length 6m when it is used as **strut with both of its end hinged**. Young's modulus $E=2x10^5 N/mm^2$.

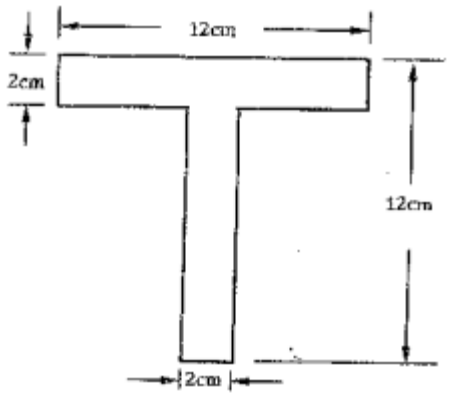

(Total marks 20)

Fig 05.

Question 06.

a. Write common examples of fatigue failure35. (02 marks)

b. What is an S-N curve? What are the useful data can be obtained from an S-N curve?

(04 marks)

c. Briefly explain the effect of a stress concentrator on fracture of components. (06 marks)

d. Write a short account on buckling failure. (08 marks)