Higher National Diploma in Engineering (Civil)

2nd Year, Second Semester Examination - 2020

CE 2212-Structural Design

Q1 Design reinforcements for a span and a support which are available Maximum bending moment of following continuous one-way slab, assuming a cover of 25mm and other dimensions as shown below:

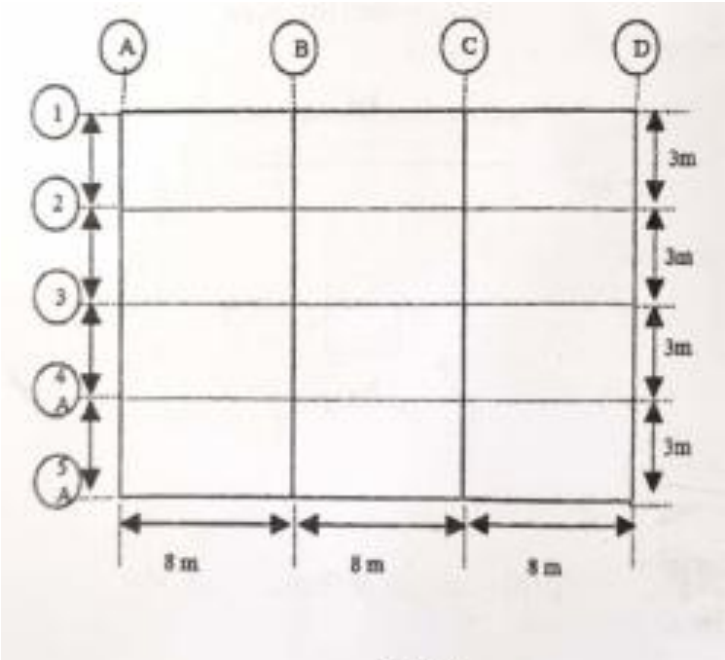

Fig (1)

- Slab Thickness =125mm
- Imposed load, Qk=3kN/m^2
- Finishes of slab and partitions =2.95 kN/m^2
- Density of Concrete =24kN/m^2

The characteristic of material strengths of concrete and reinforcements are 30N/mm^2 and 460N/mm respectively.

(Total 20 marks)

Q2

As shown in Fig (2), Fig (3) & fig (4), the beams are arranged in 5m distances (center to center) with equal four spans for both directions.The beam is subjected to total dead load (inclusive self-weight of beam) of 85kN/m and imposed load of 50kN/m.Design reinforcements (For bending & shear) of Beam 1 (3/A-E) at middle support and 1st internal span by using following data.

- Width of the beam (b_w)-300mm
- Overall height of the beam(h) -660 mm
- Thickness of the slab(h_r) -180mm
- Cover to the main reinforcements =25mm
- Characteristics strengths of materials are $f_{cu} = \frac{30N}{mm^2}, f_{vy} = 250Nmm^2$**(Total 20 marks)**
-

Fig(2) – sectional view

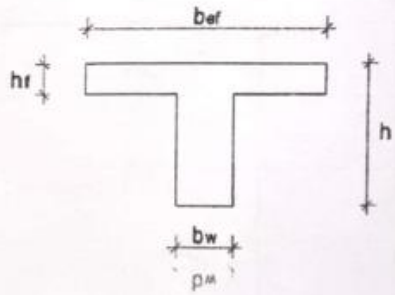

Fig (3) – section of Beam 1 (3/A-E)

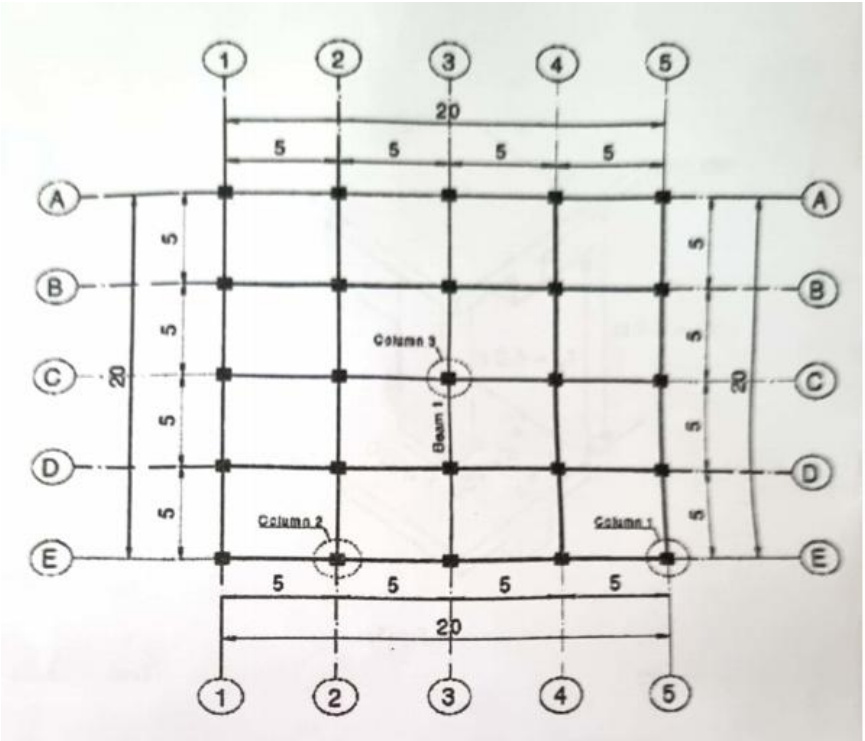

Fig (4) - Plan

Q3

The reinforced concrete columns of size of 250x350mm are used to support a 180mm thick slab.The column is connected to the slab at the bottom and to the beam at the top as shown fig (5).The total design load of 1000kN is applied to this interior column axially without any eccentricity.If the frame is braced,

a) Classify the column as short or slender

b) Determine the main reinforcement required for the column to resist the axial load.

$$f_{cu} = 25Nm^2 \, , f_y = 460N/mm^2$$

(Total 20 marks)

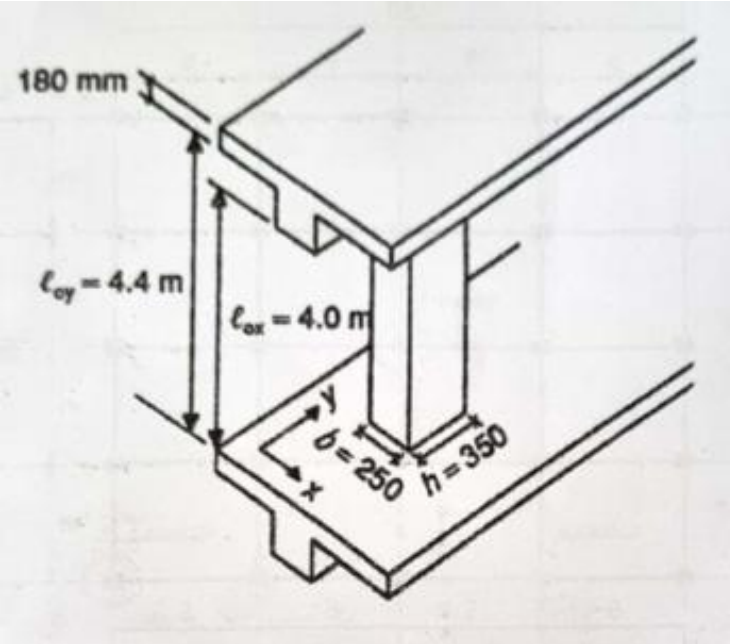

Fig (5)

Q4

Check the stability of 20mm floor boarding spanning between 50mmx250mm timber joist at 600mm centers [fig (6)].

The boards are of strength class C14. Maximum bending occurs at an internal support and may be found using $M=wL^2/10$. The maximum shear force (reaction) occurs at outer support and may be taken as $V=0.4wL$

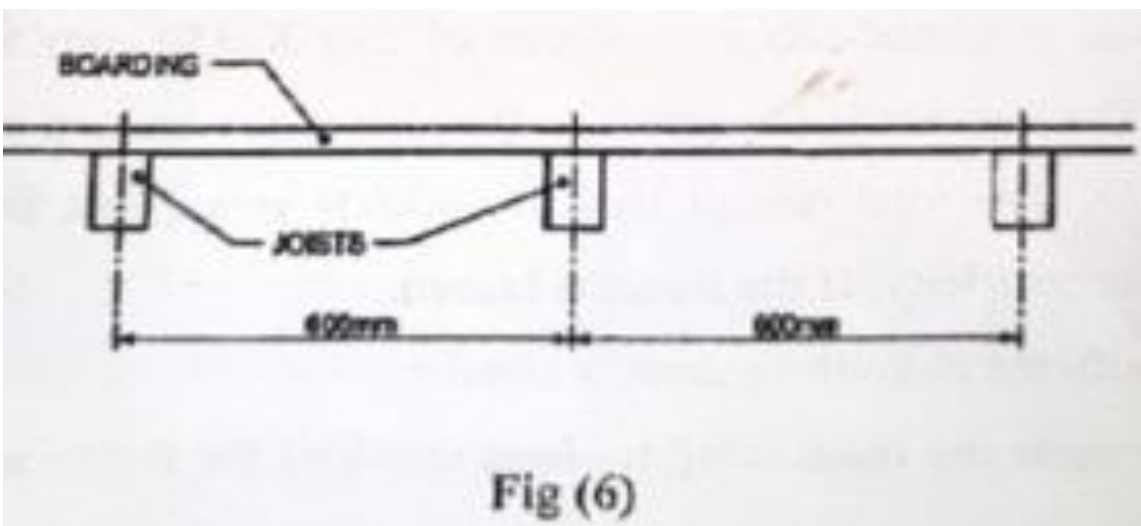

Fig (6)

Additional Data

- Factored dead load (with the self weight of boards) =0.15kN/m²
- Factored imposed load $=1.5kN/m²
- Service class - SC 1
- Duration of loading - Long term duration
- Consider 1m width of boarding for the calculation
- To check the stability, do the **bending, shear and deflection checks only**.
- Total Deflection, $\Delta = WL^4/384EI$

(Total 20 marks)

Q5

A Lap joint between plates 65mm x 8mm is shown in fig(7).It transmits a factored load of 45kN using black bolts of 16mm diameter and grade 4.6.The plates are made of steel of grade 275. Check the shear capacity and bearing capacity and calculate the number of bolts required to make the connection.Also find the pitch and edge distance.

Clearly mention the assumptions that you made.

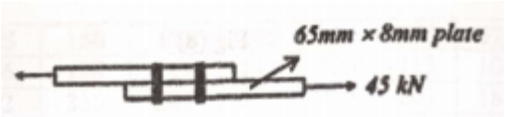

Fig (7)

(Total 20 marks)

Q6

A ground floor wall in a three story building supports the loads indicated in fig(08).

Choose suitable brick and mortar for 215mm thick wall. Following details are given.

- Partial safety factor for material, $_m = 2.8$
- The manufacturing control is to be **normal** and construction control is to be **special**.

- Characteristic dead load of 1st floor slab =4.8kN/m^2
- Characteristic imposed load of 1st floor slab =5.0 kN/m^2
- Ultimate axial load from upper floors = 250kN
- Effective height, h_{eff}=0.75h (h- height of wall)
- Effective thickness, t_{eff} =t (t-Thickness of the wall)
- The design vertical load resistance of a wall per unit length is given by$\beta t f_k / \quad m$

(Total 20 marks)

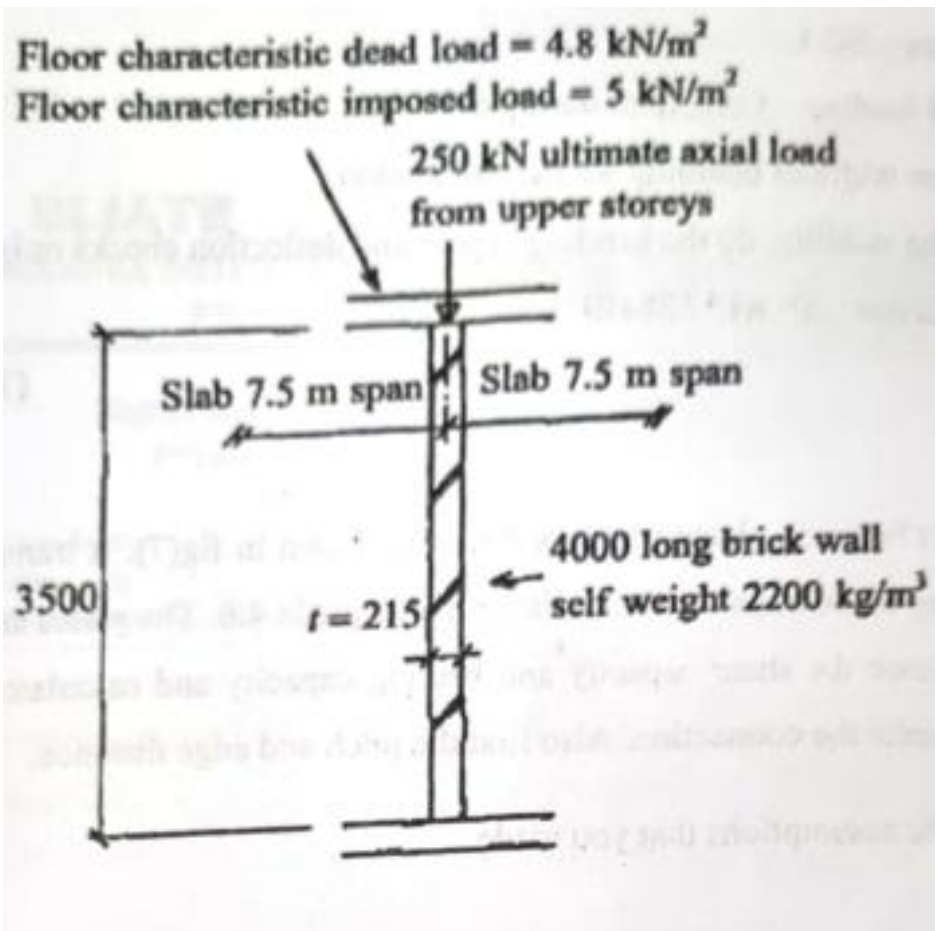

Fig (8)

Area's of Reinforcement

Cross-sectional areas of groups of bars (mm^2)

Bar Size	Number of Bars * Denotes non-preferred sizes									
	1	2	3	4	5	6	7	8	9	10
6mm	28.3	56.5	84.8	113	141	170	198	226	255	283
8mm	50.3	100	151	201	251	302	352	402	452	503
10mm	78.5	157	236	314	339	471	550	628	707	785
12mm	113.1	226	339	452	566	679	792	905	1718	1131
16mm	201.1	402	603	804	1005	1206	1407	1608	1810	2011
20mm	314.2	628	942	1257	1571	1885	2199	2513	2827	3142
25mm	490.9	982	1473	1963	2454	2945	3436	3927	4418	4909
32mm	804.2	1608	2413	3217	4021	4825	5630	6434	7238	8042
40mm	1257.0	2513	3770	5026	6283	7540	8790	10053	11310	12566
50mm*	1963.5	3927	5890	7854	9812	11781	13744	15708	17671	19635

Cross-sectional areas for Specific Spacings in mm^2 / Metre Width

Bar Size	Spacing of Bars (Millimetres) * Denotes non-preferred sizes									
	75	100	125	150	175	200	225	250	275	300
6mm *	377	283	226	188	162	141	125	113	103	94
8mm	670	503	402	335	287	251	223	201	183	168
10mm	1047	786	628	524	449	393	348	314	285	262
12mm	1508	1131	905	754	646	565	503	452	411	377
16mm	2681	2011	1608	1340	1149	1005	894	801	731	670
20mm	4189	3142	2513	2094	1795	1571	1396	1257	1143	1047
25mm	6545	4909	3927	3272	2805	2454	2182	1963	1785	1636
32mm	-	8042	6434	5362	4596	4021	3574	3217	2924	2681
40mm	-	-	10053	8378	7181	6283	5587	5027	4571	4189
50mm*	-	-	-	13090	11220	9617	8727	7854	7140	6545

Shear strength of bolts

Bolt Grade	Shear strength , p_s ($N/mm^{2)}$
4.6	160
8.8	375
10.9	400

Bearing Strength of Bolts

Bolt Grade	Bearing Strength
4.6	460
8.8	1000
10.9	1300

Bearing Strength of Connected plates

Steel Grade	S275	S355	S460
Bearing Strength(N/mm^2)	460	550	670

Bearing Capacity of bolt, $P_{bb} = dt_b p_{bb}$

Bearing capacity of connected plates, $P_{bs} = k_{bs} d t_p p_{bs}$ but $P_{bs} \leq 0.5 k_{bs} e t_p p_{bs}$

$k_{bs} = 1$ for Standard clearance holes

e = End distance

d = Nominal diameter of bolt

t_p = Thickness of the connected plates

Tensile stress area

Nominal size and tread diameter (mm)	Tensile stress area (mm^2)
15	84.5
16	157
20	245
22	303
24	353

Table 4a) — Partial safety factors for material strength — Compression, γ_m

		Category of construction control	
		Special	Normal
Category of manufacturing control of structural units	Special	2.5	3.1
	Normal	2.8	3.5

Table 2 — Characteristic compressive strength of masonry, f_k, in N/mm^2

a) Constructed with standard format bricks

Mortar designation	Compressive strength of unit (N/mm^2)								
	5	10	15	20	27.5	35	50	70	100
(i)	2.5	4.4	6.0	7.4	9.2	11.4	15.0	19.2	24.0
(ii)	2.5	4.2	5.3	6.4	7.9	9.4	12.2	15.1	18.2
(iii)	2.5	4.1	5.0	5.8	7.1	8.5	10.6	13.1	15.5
(iv)	2.2	3.5	4.4	5.2	6.2	7.3	9.0	10.8	12.7

Table 7 — Capacity reduction factor, β

Slenderness ratio h_{ef}/t_{ef}	Eccentricity at top of wall, e_k			
	Up to $0.05t$ (see note 1)	$0.1t$	$0.2t$	$0.3t$
0	1.00	0.88	0.66	0.44
6	1.00	0.88	0.66	0.44
8	1.00	0.88	0.66	0.44
10	0.97	0.88	0.66	0.44
12	0.93	0.87	0.66	0.44
14	0.89	0.83	0.66	0.44
16	0.83	0.77	0.64	0.44
18	0.77	0.70	0.57	0.44
20	0.70	0.64	0.51	0.37
22	0.62	0.56	0.43	0.30
24	0.53	0.47	0.34	
26	0.45	0.38		
27	0.40	0.33		

NOTE 1 It is not necessary to consider the effects of eccentricities up to and including $0.05t$.

NOTE 2 Linear interpolation between eccentricities and slenderness ratios is permitted.

NOTE 3 The derivation of β is given in Appendix B.

Table 7 — Capacity reduction factor, β

Slenderness ratio h_{ef}/t_{ef}	Eccentricity at top of wall, e_k			
	Up to $0.05t$ (see note 1)	$0.1t$	$0.2t$	$0.3t$
0	1.00	0.88	0.66	0.44
6	1.00	0.88	0.66	0.44
8	1.00	0.88	0.66	0.44
10	0.97	0.88	0.66	0.44
12	0.93	0.87	0.66	0.44
14	0.89	0.83	0.66	0.44
16	0.83	0.77	0.64	0.44
18	0.77	0.70	0.57	0.44
20	0.70	0.64	0.51	0.37
22	0.62	0.56	0.43	0.30
24	0.53	0.47	0.34	
26	0.45	0.38		
27	0.40	0.33		

NOTE 1 It is not necessary to consider the effects of eccentricities up to and including $0.05t$.

NOTE 2 Linear interpolation between eccentricities and slenderness ratios is permitted.

NOTE 3 The derivation of β is given in Appendix B.