Higher National Diploma in Civil Engineering
Third Year, Second Semester Examination – 2020
CE3119- Measurement and Estimation

Time: Three (03) hours

All question carries equal marks

Instruction to candidates

- This paper contains Six (06) questions and Four (04) pages including drawings.
- Answer any Five (05) questions including question 01 (compulsory)
- Drawing is enclosed separately for question 01 & 02.
- TDS measurement sheet should be prepared by the candidates.
- Method of measurement for Building works should be followed (Unscripted copy).
- Assume the shown Ground Level is after removal of top soil.
- All assumptions (if any) should be stated in the query sheet for Q1 & Q2

1. Answer the following questions based on the given drawings.
   a. Find center line length of external wall. (2 Marks)
   b. Find center line length of internal wall. (3 Marks)
   c. Take-off quantities for the following works.
      i. Excavation for columns and wall foundation. (5 Marks)
      ii. Screed Concrete for columns and wall foundation. (5 Marks)
      iii. Concrete for columns up to DPC level. (5 Marks)

   (Total 20 Marks)

2. Take-off quantities for the following works based on the given drawings.
   a. Random rubble work for foundation (m^3) (5 Marks)
   b. Backfilling under the trenches (3 Marks)
   c. Hard core earth filling (5 Marks)
   d. Find the additional required soil, if the excavated soil is used for back filling the trench and hardcore filling under the floors. (2 Marks)
   e. Brickwork thickness of 225mm (5 Marks)

   (Total 20 Marks)

3.

a. Explain the followings

i. Direct cost (3 Marks)

ii. Site overheads (3 Marks)

iii. Markup (3 Marks)

b. Prepare a unit rate analysis for Cement concrete in 225mm x 225mm size columns in ground floor using the following assumptions / norms per cube

Ready mix Concrete – 52,000/Cube; Transport charge – Rs. 600/Cube; Concrete Wastage 2%; Hire of vibrator 2.25day/cube; Vibrator Rs. 4500/day;

Placing of concrete in columns;

Mason 2.25day/cube; Unskilled labour 6.75day/cube; Skilled labour for vibrator 2.25day/cube;

Curing of concrete;

Water for curing 225 Gals/Cube; Water – Rs.3/Gals; Jute Hessian – Rs. 500/Cube; Labour for curing 9hr/cube; Skilled Labour - Rs. 2000/day; Un Skilled labour – Rs. 1800/day; Markup 25%; Indicate any assumptions where necessary. (11 Marks)

(Total 20 Marks)

4.

a. State types of contract and briefly explain one of them including advantages and disadvantages. (6 Marks)

b. Write short notes on traditional method of procurement and design and build. (4 Marks)

c. What are the factors that should be considered during a bid evaluation? (5 Marks)

d. State the purpose of bid security and reasons for forfeiting bid security in a bidding process. (5 Marks)

(Total 20 Marks)

5.

a. Discuss the term "post contract" and "pre-contract" stage? (4 Marks)

b. Briefly explain the followings in a construction contract

i. Liquidated damage (4 Marks)

ii. Preambles (4 Marks)

iii. Provisional sum with example (4 Marks)

iv. Extension of time (EOT) (4 Marks)

(Total 20 Marks)

6.

a. What is dispute in a construction contract? State dispute resolution methods in practice (5 Marks)

b. What are the types of disputes may arise in a contract? (5 Marks)

c. Discuss the Importance of site safety and insurance in a contract (5 Marks)

d. Write a short note on termination of a contract (5 Marks)

(Total 20 Marks)

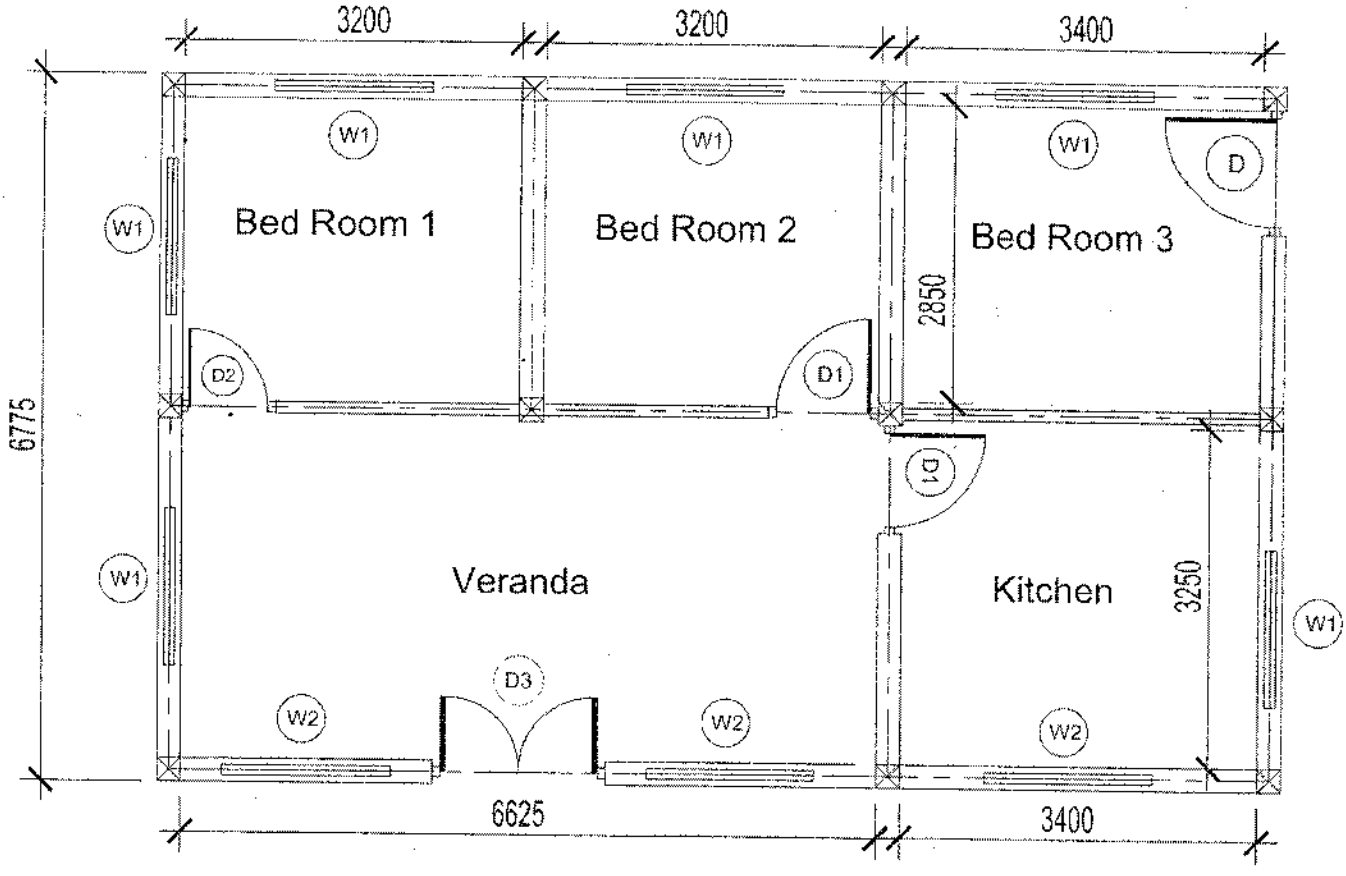

SCHEDULE OF DOORS & WINDOWS			
TYPE	SIZE	DESCRIPTIONS	Nos.
D	1200 x 2400	Paneled Door with 100 x 75 Frame	01
D1	1050 x 2100	-Ditto-	02
D2	885 x 2100	-Ditto-	01
D3	1650 x 2400	-Ditto-	01
W1	1500 x 1650	Glazed window with 100 x 75 Frame	06
W2	1600 x 1800	-Ditto-	03

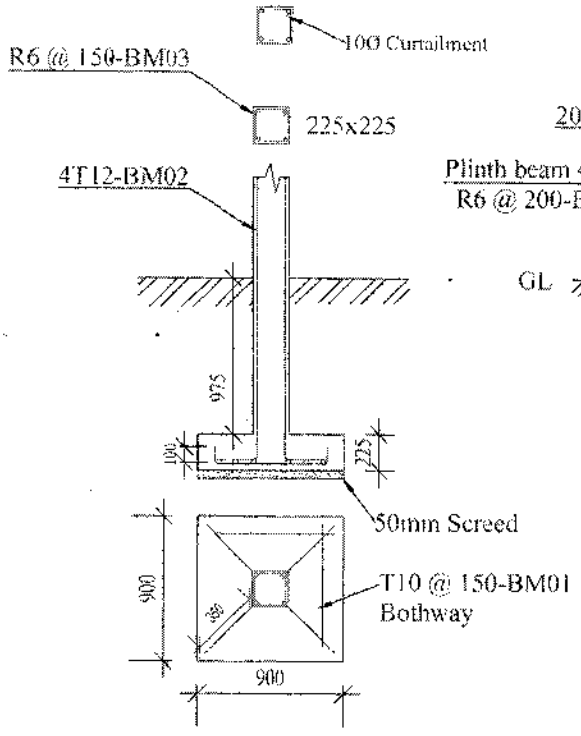

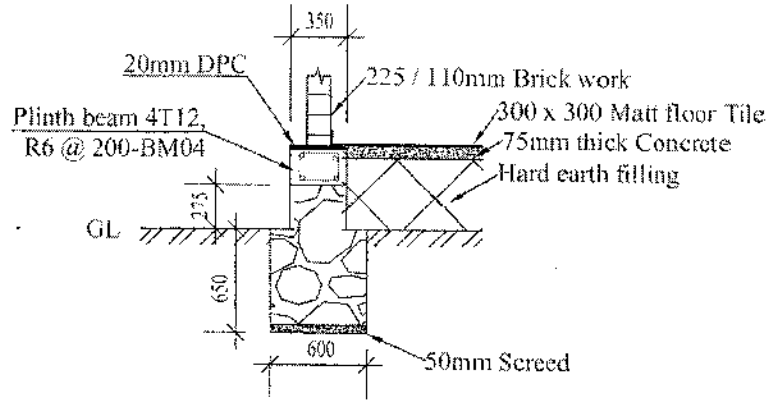

GENERAL NOTES:

01. All dimensions are given in millimeter.
02. All drawings are not to be scaled.
03. Concrete mix as follows.

Foundation Mass Concrete	- 1:2:4
Floor Concrete	- 1:2.5:5
Column, Beams, lintels	- 1:2:4

04. Wall height is 3m (No gable wall)
05. Plinth beam height 225mm
06. Clear covers as follows:

Column base	- 40mm
Column shaft, beams, lintels	- 25mm