Higher National Diploma in Civil Engineering
Third Year, Second Semester Examination – 2019
CE3119- Measurement and Estimation

No. of Questions : 06
No. of Pages : 04
All question carries equal marks — Time : 03 (hours)

Instruction to candidates

- This paper contains Six (06) questions and Four (04) pages including drawings.
- Answer any Five (05) questions including question 01 (compulsory)
- Drawing is enclosed separately for question 01 & 02.
- TDS measurement sheet should be prepared by the candidates.
- Method of measurement for Building works should be followed (Unscripted copy).
- Assume the shown Ground Level is after removal of top soil.
- All assumptions (if any) should be stated in the query sheet for Q1 & Q2

1.
   a. Find the external wall center line length for the given plan. (2 Marks)
   b. Find the internal wall center line length for the given plan. (3 Marks)
   c. Take-off quantities for the following works based on the given drawings.
      i. Excavation. (5 Marks)
      ii. Foundation Mass Concrete (m^3). (5 Marks)
      iii. Random rubble work for foundation (m^3). (5 Marks)

(Total 20 Marks)

2. Take-off quantities for the following works based on the given drawings.
   a. Brick work for internal wall (6 Marks)
   b. Backfilling under the trenches (4 Marks)
   c. Hard earth filling for Bedroom 1 & 3 (5 Marks)
   d. Prepare an abstract sheet for item (a.) and (b.) (5 Marks)

(Total 20 Marks)

3.
   a. Briefly explain the importance of BOQ. (5 Marks)
   b. Prepare quantitative analysis and unit rate breakdown for mixing of 1:2:4 (20) concrete using following data. Bulk density of cement in bag form = 1442 kg/m^3; Solid density = 3150 kg/m^3; Sand :- Bulk density = 1600 kg/m^3; Solid density = 2650 kg/m^3; Metal - Bulk density = 1440 kg/m^3; Solid density = 2800 kg/m^3; Water : cement ratio is 0.52; Cement - Rs. 1035/bag; Sand - Rs. 4700/m^3; Metal – Rs. 5250/m^3; Mixer - 3hr/cube; Skilled labour -3hr/cube; Unskilled labour – 2day/Cube; Mixer – Rs. 4500/day; Skilled labour – Rs. 1800/day; Unskilled labour – 1500/day; Water : cement ratio is 0.52 (by weight) to be used. Water is part of the preliminary; Indicate any assumption if necessary. (15 Marks)

(Total 20 Marks)

4.

a. Describe the importance of approximate estimating. (3 Marks)

b. State the methods of approximate estimating and briefly explain one of the method including advantages and disadvantages. (7 Marks)

c. State methods of bidding and briefly explain on of them including advantages and disadvantages. (7 Marks)

d. State any six components of a contract document. (3 Marks)

(Total 20 Marks)

5.

a. Types of Standard Bidding Document (SBD) for works with their limitation (4 Marks)

b. Briefly explain the followings based on SBD 03 (CIDA publication)

i. Time extension and late completion (4 Marks)

ii. Advance payment and deduction (4 Marks)

iii. Retention money, deduction and repayment (4 Marks)

c. Briefly explain purpose of day work schedule (4 Marks)

(Total 20 Marks)

6. Briefly explain the followings

a. Compare the litigation and Alternate Dispute Resolution (ADR) (4 Marks)

b. Appointment and replacement of adjudicator based on the CIDA publications (6 Marks)

c. Briefly discuss the obligations of employer and contractor in a contract (6 Marks)

d. ***"Bidders shall be required to submit bids valid for a period specified in the bidding documents".*** Briefly explain the importance of bid validity period (4 Marks)

(Total 20 Marks)

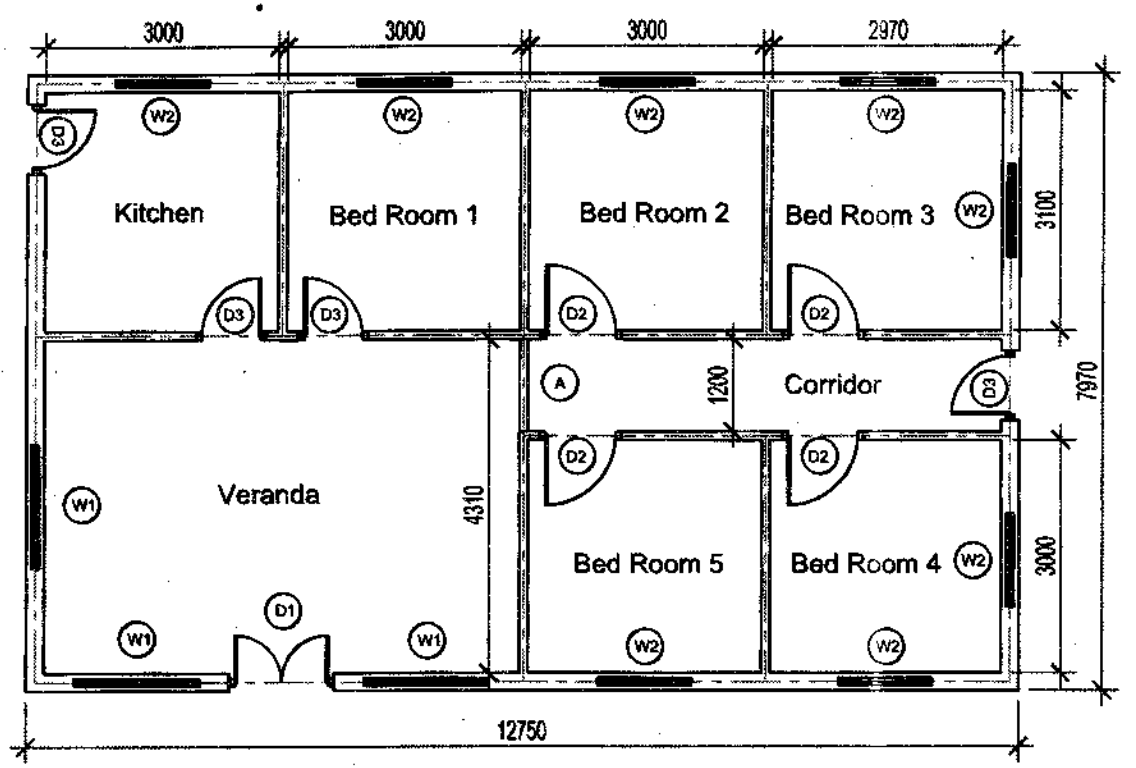

SCHEDULE OF DOORS & WINDOWS

TYPE	SIZE	DESCRIPTIONS	NoS.
D1	1350 x 2400	Paneled Door with 100 x 75 Frame	01
D2	1050 x 2100	-Ditto-	04
D3	900 x 2100	Paneled Door 100 x 75 Frame	04
W1	1600 x 1200	Paneled window with 100 x 50 Frame	03
W2	1200 x 1200	-Ditto-	08
A	1200 x 2100	Flat Arch	01

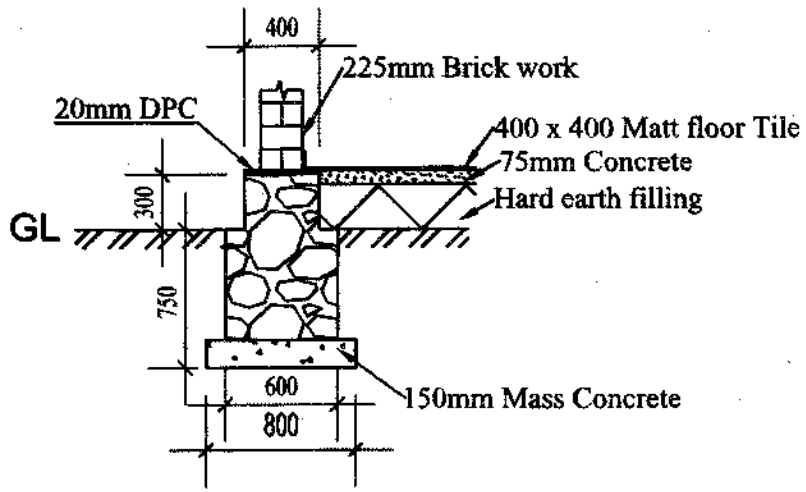

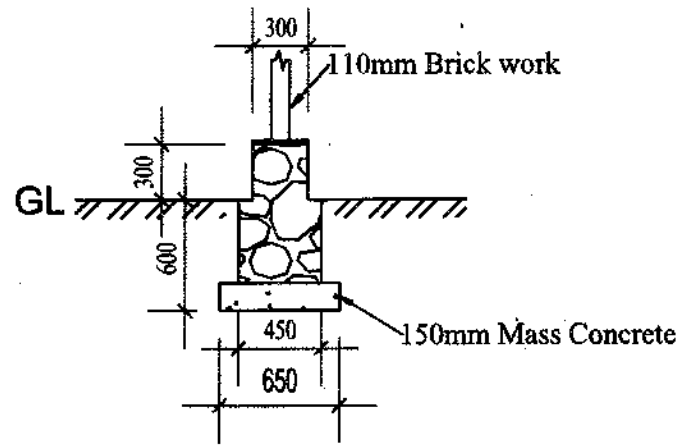

GENERAL NOTES:

01. All dimensions are given in millimeter.
02. All drawings are not to be scaled.
03. Concrete mix as follows.

Foundation Mass Concrete	- 1:3:6(25)
Floor Concrete, Lintel	- 1:2:4(20)

04. Wall height is 3m (No gable wall)
05. Lintel height is 150mm and the width is equal to the wall width