Higher National Diploma in Civil Engineering
Third Year, Second Semester Examination – 2022
CE3119- Measurement and Estimation

All questions carry equal marks | Time : Three (03) hours

Instruction to candidates

- This paper contains Six (06) questions and Four (04) pages including drawings.
- Answer any Five (05) questions including question 01 (compulsory)
- Drawing is enclosed separately for question 01 & 02.
- TDS measurement sheet should be prepared by the candidates.
- Method of measurement for Building works should be followed (Unscripted copy).
- Assume the shown Ground Level is after removal of top soil.
- All assumptions (if any) should be stated in the query sheet for Q1 & Q2

1. Answer the following parts based on the given drawings.
   a. Find center line length of external wall. (02 Marks)
   b. Find center line length of internal wall. (03 Marks)
   c. Take-off quantities for the following works.
      i. Excavation for wall foundation. (05 Marks)
      ii. Random rubble work for foundation (m^3) (05 Marks)
      iii. Hard earth filling for Bedroom 1 & 3 (05 Marks)

   (Total 20 Marks)

2. Take-off quantities for the following works based on the given drawings.
   a. Brick work for Internal wall (06 Marks)
   b. DPC for External wall (03 Marks)
   c. Floor concrete for Bedroom 1 (02 Marks)
   d. What are the steps to be followed in preparation of a BOQ (04 Marks)
   e. Prepare a sample BOQ for the items calculated in Q1 (05 Marks)

   (Total 20 Marks)

3.

a. Explain the followings

i. Variations and claim (05 Marks)

ii. Work norms (03 Marks)

b. Prepare quantitative analysis and unit rate breakdown for mixing of 1:2:4 (20) concrete using following data.

Bulk density of cement in bag form = 1442 kg/m3; Solid density = 3150 kg/m3; Sand :- Bulk density = 1600 kg/m3; Solid density = 2650 kg/m3;

Metal - Bulk density = 1440 kg/m3; Solid density = 2800 kg/m3;

Water : cement ratio is 0.52; Cement - Rs. 1035/bag; Sand - Rs. 4700/m3;

Metal – Rs. 5250/m3; Mixer - 3hr/cube; Skilled labour -3hr/cube;

Unskilled labour – 2day/Cube; Mixer – Rs. 4500/day; Skilled labour – Rs. 1800/day;

Unskilled labour – 1500/day; Water : cement ratio is 0.52 (by weight) to be used.

Water is part of the preliminary; Indicate any assumption if necessary. (12 Marks)

(Total 20 Marks)

4.

a. Describe the importance of approximate estimating. (03 Marks)

b. State types of approximate estimating methods and explain any one of them. (06 Marks)

c. What is price fluctuation? (03 Marks)

d. What are the factors to be considered when preparing an interim payment certificate? (04 Marks)

e. What is the importance of site safety and insurance in a contract. (04 Marks)

(Total 20 Marks)

5.

a. State the contract types and explain one of them (05 Marks)

b. What are the documents maintained at a construction site (04 Marks)

c. Briefly explain the purpose followings

i. Bid Security (02 Marks)

ii. Performance security (02 Marks)

iii. Retention money and Retention Guarantee (04 Marks)

iv. Components of a contract document (03 Marks)

(Total 20 Marks)

6.

Write short notes for following based on the CIDA publications

i. What is a dispute in a contract? (02 Marks)

ii. Default by Employer and Default by Contractor (05 Marks)

iii. Employers & Contractors obligations (05 Marks)

iv. Liquidated damage (03 Marks)

v. Employer's liabilities and risks (05 Marks)

(Total 20 Marks)

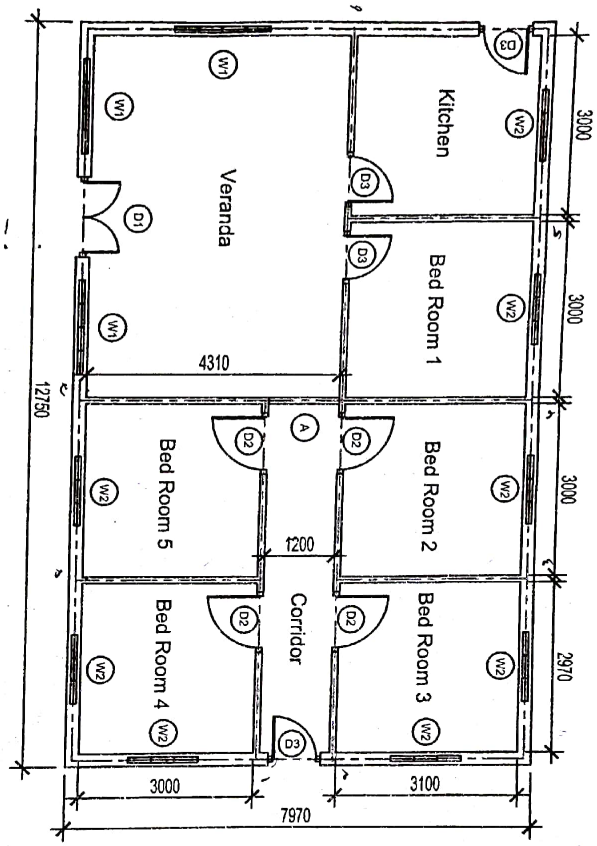

SCHEDULE OF DOORS & WINDOWS

TYPE	SIZE	DESCRIPTIONS	NoS.
D1	1350 x 2400	Paneled Door with 100 x 75 Frame	01
D2	1050 x 2100	-Ditto-	04
D3	900 x 2100	Paneled Door 100 x 75 Frame	04
W1	1600 x 1200	Paneled window with 100 x 50 Frame	03
W2	1200 x 1200	-Ditto-	08
A	1200 x 2100	Flat Arch	01

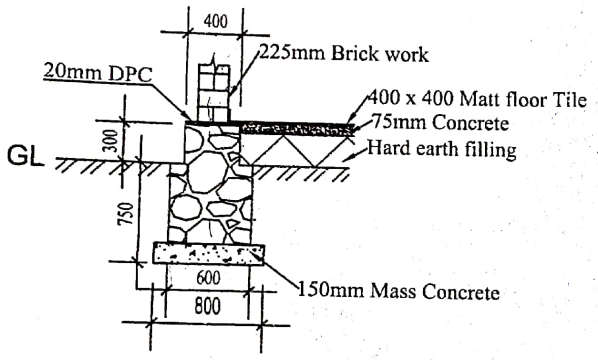

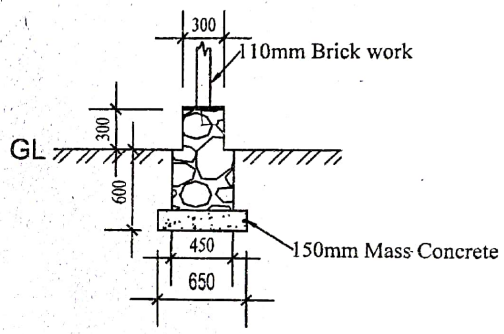

GENERAL NOTES:

01. All dimensions are given in millimeter.
02. All drawings are not to be scaled.
03. Concrete mix as follows.

Foundation Mass Concrete	- 1:3:6(25)
Floor Concrete, Lintel	- 1:2:4(20)

04. Wall height is 3m (No gable wall)
05. Lintel height is 150mm and the width is equal to the wall width