Higher National Diploma in Engineering (Civil)
Higher National Diploma in Quantity Surveying
1st year, Second Semester Examination – 2017
ME1205 / QS 12062 - Engineering Graphics and AutoCAD

Instructions for Candidates:
Answer all questions.
You can use both sides of the paper.

No. of questions : 04
No. of pages :03
Time : **03 hours**

Q1)

i. Construct a parabola having its vertex 30 mm from the focus. (12 marks)

ii. Draw to full size, the cam shown in Figure 01 using any geometrical construction method. The outside curve is an ellipse. The parallel curve is drawn 18 mm inwards from it. (All dimensions in figure 01 are in mm). (16 marks)

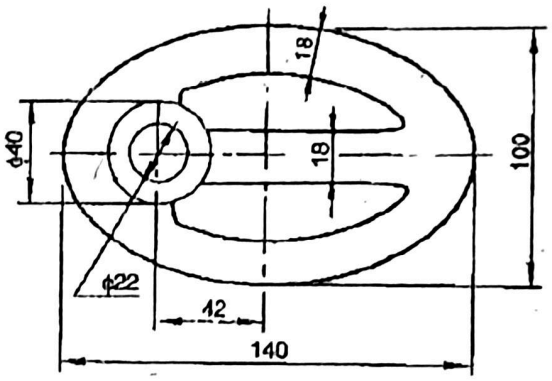

Figure 01

Q2)

i. A circle of 25 mm radius is rolling on a straight line without slip. A point P is 10 mm inside from the circumference of the rolling circle and initially at the bottom most position. Draw the locus of point P. (15 marks)

ii. An ant is moving around the surface of a vetical cylinder of 50 mm at a constant angular speed and simultaneously at uniform rate of advance in the axial direction. If the ant moves 75 mm in the axial direction during one turn, draw the path of the ant. (12 marks)

Q3)

i. A hollow square pyramid, side of base 45 mm and height 65 mm, is resting on Horizontal Plane (H.P.) on its base with all sides of base equally inclined to Vertical Plane (V.P.) as shown in figure 02. A square hole of side 20 mm is drilled through the pyramid. Sides of the square hole are equally inclined to H.P. Axes of the pyramid and square hole intersect at right angles, 20 mm above the base of the pyramid. Axis of the hole is perpendicular to V.P. Draw the development of the pyramid surface with hole. (17 marks)

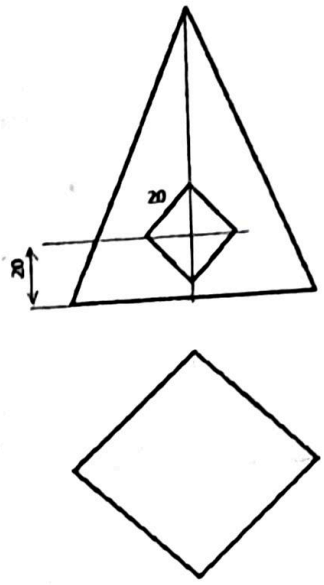

Figure 02

ii. A vertical cylinder diameter of 85 mm and height 115 mm rests on horizontal plane. A square prism of base side of 36 mm intersects the cylinder. The axis of square prism is inclined 30° to the Horizontal plane. The axes of cylinder and prism do not intersect and they are displaced (offset) by a distance of 10 mm as shown in the plan of figure 03. (The incomplete front view and plan are shown in figure 03). Draw the lines of intersection (interpenetration) between the cylinder and prism, on the front view, end view and plan. (18 marks)

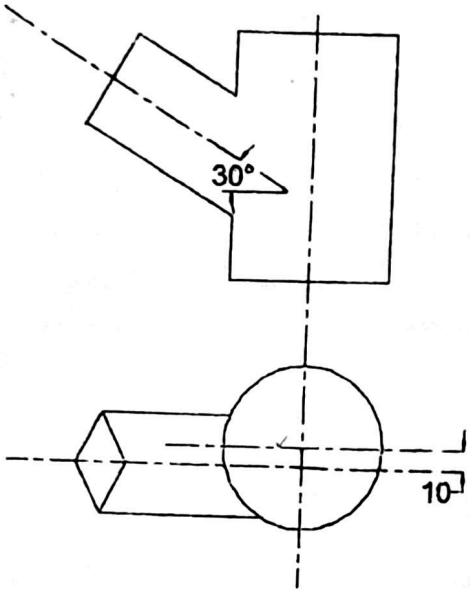

Figure 03

8 Q4)

Write down the necessary Auto CAD commands in the order to construct the object shown in the **Figure 04**. All dimensions are given in inches.

(10 marks)

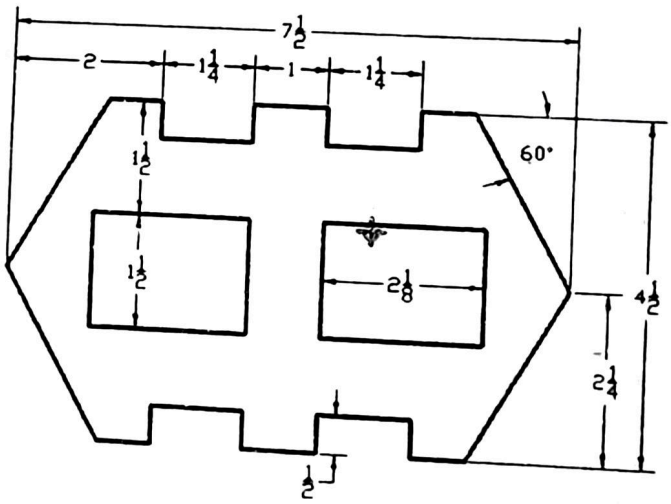

Figure 04