Higher National Diploma in Engineering (Civil)
Higher National Diploma in Quantity Surveying
1st year, Second Semester Examination – 2019
ME1205/ QS 12062 - Engineering Graphics and AutoCAD (B)

Instructions for Candidates:
Answer all questions.
You can use both sides of the paper.

No. of questions : 04
No. of pages :03
Time : **03 hours**

1)

a) Draw a parabola using the rectangle method with a base of 60mm and an axis of 90mm.
(14 marks)

b) The Vertex (V) of a Hyperbola is 40mm away from its Focus (F). Draw the hyperbola if the eccentricity is 4/3.
(14 marks)

2)

a) A wheel of 48mm diameter rolls on the horizontal floor by one revolution without slipping. Draw the locus of a point (P), by taking the initial position of point (P) to be 6mm inside from the bottommost point of wheel periphery.
(14 marks)

b) A wheel of 80mm diameter has spokes that connect the rim and the hub. The wheel is rotating at uniform speed. A dust particle starts from the center and travels along a spoke at uniform speed and reaches the rim at the end of one wheel revolution. Trace the path of the particle.
(14 marks)

3) a) A regular pentagon pyramid, each edge of base 30mm and height of axis 45mm, stands on its base with one edge of base parallel to vertical plane, as shown in Figure 01. A section plane AB cuts the pyramid at a point 30mm from the base along the axis and makes an angle 45^0 with horizontal plane as shown below. Draw the development of the truncated portion of the pyramid. (17 marks)

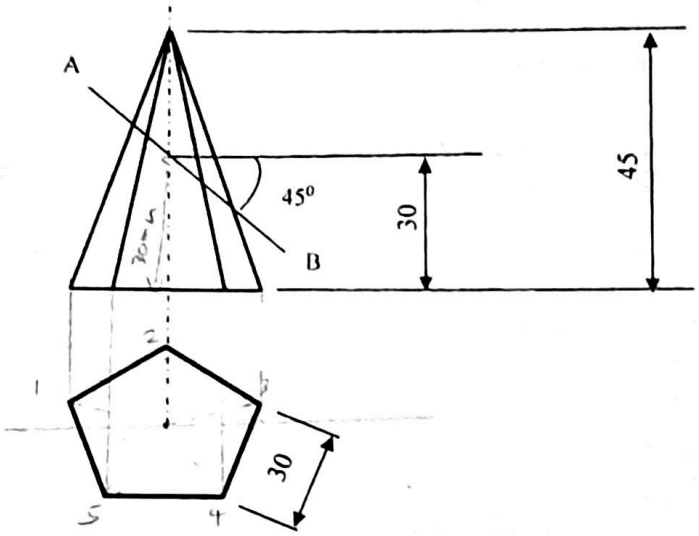

Figure 01

b) In Figure 02, a vertical cylinder of base 70mm diameter is penetrated by a cone of base diameter 70mm and axis length of 95mm. The axes of the two solid objects intersect each other at right angles. The axis of the cone is parallel to both horizontal and vertical planes. Apex of the cone reaches 50mm beyond the axis of the cylinder. Draw the projections (Front Elevation, End Elevation and Plan) showing the lines of intersections. (17 marks)

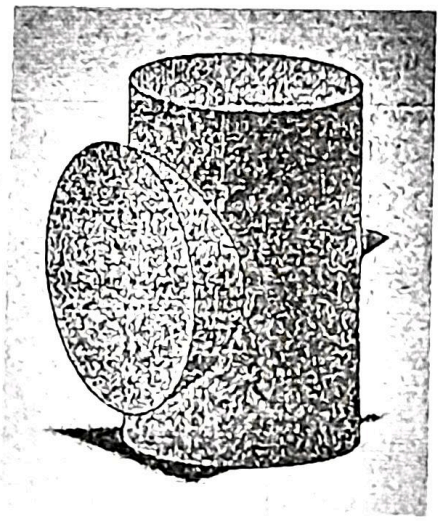

Figure 02

4)

Write down the necessary Auot CAD commands in the order to construct the object shown in the Figure 03. All dimensions are given in inches. (10 marks)

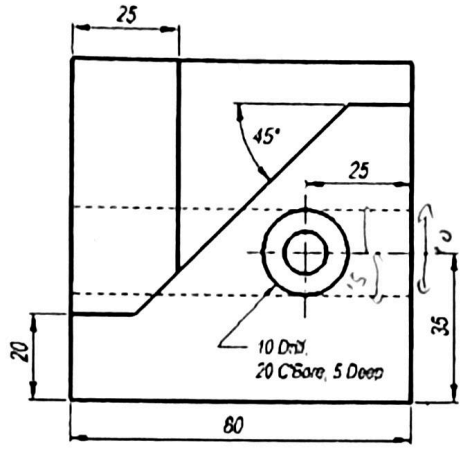

Figure 03