Higher National Diploma in Quantity surveying
First Year, Second Semester Examination – 2017
QS 12013 - Measurement 1

Instructions for Candidates:
Answer all questions

No. of questions : 2
No. of pages : 3
Time : Three hours

Q1. Following figures show a plan of a building, cross section of the relevant foundation and doors & windows schedule.

Assume the following.

- Shown ground level (GL) of the drawing is after removing top soil.
- All the externals walls are 200 mm thk and all internal walls are 100mm thk.
- Heights of wall are 3m (upto wall plate) and gable walls are not available in this building.
- Lintel height is 150mm and the width is equal to the wall width.

(Neat sketches, clear calculations and following the rules when preparing TDS is compulsory)

Prepare a measurement sheet (TDS sheet) for the following items. (3 marks)

a. The centre line length of external walls (2marks)
b. The centre line length of internal walls. (4marks)
c. The quantities of excavation to the foundations. (8marks)
d. The quantities of screed 1:3:6 (25) of the foundations (4marks)
e. The backfilling (6marks)
f. Hard-core filling under the floors (6 marks)
g. Brick work for super structure (15 marks)
h. Plastering internal wall and external walls separately. (15marks)
i. Query sheet (5 marks)

(Total 68 marks)

Q2.

a. Prepare an abstract sheet of the taking off quantities of Q1 (10 marks)

b. Show that the quantities of items (c),(d) , (e),(f), (g) and (h) of Q(1) on a BOQ sheet (12 marks)

c. Write specifications for followings

i. Timber Formwork

ii. Brick work (10marks)

(Total 32 marks)

Doors & Windows Schedule

Type	Description	Size (m)
D1	Flushed door with above trellis	1.2x2.4
D2	Panel door	0.9x2.1
D3	Panel door	0.75x2.1
W1	Glazed window with above trellis	2.4 x 2.1
W2	Glazed window with above trellis	1.2 x1.5
A	Flat arch	1.0 x 2.1

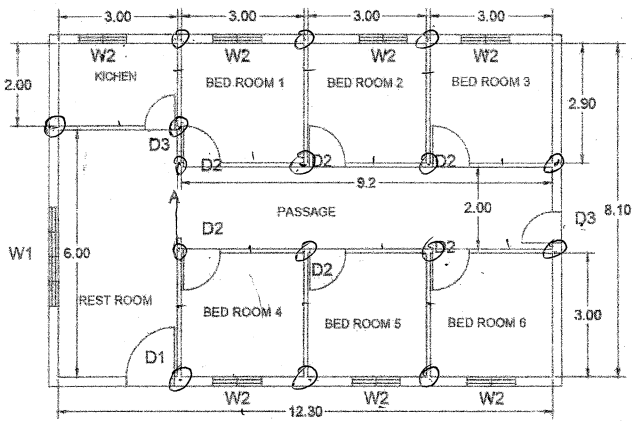

All plan dimensions in m

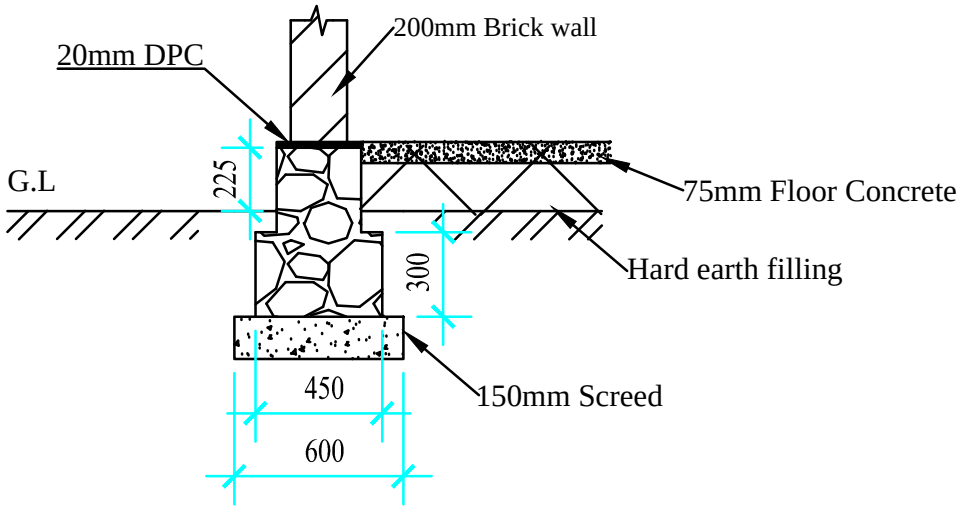

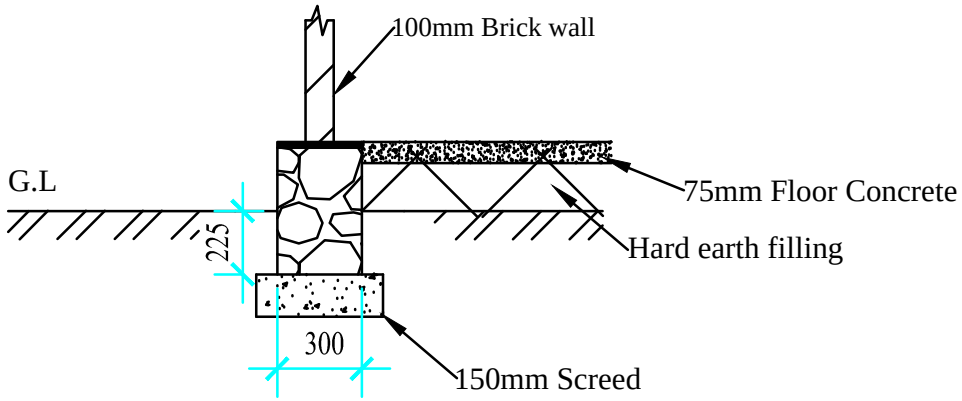

Random Rubble wall foundation

	T	D	S	Description
1. a.				External wall ℄ = 2(12300 + 2/½/200+8100+2/½/200) = 41,600
b.				Internal wall ℄ =
				To Horizontal = 12300+2/½/200+3/3000+150+2/100 = 21,850.00
				To Vertical = 8100+2/½/200+2/2900+2/3000+4/½/200+4/½/100 = 20,700.00
				=42,550
				(Answer may vary based on the assumption)
c.				Excavation to the wall foundation depth not exceeding 1m
		41.60		-diito- for external wall
		0.60		d=150+300+75=525
		0.53	13.23	
				(Assume internal excavation width is 400mm in the query sheet)
		38.45		-diito- for internal wall
		0.40		Internal wall ℄ = 42,550
		0.38	5.84	ddt T-Juctions = 9/½/600 = (2700)
				7/½/400 = (1400)
			19.07	= 38,450
			19.07	Backfilling
d.				1:3:6 (25) Screed Concrete for wall foundation.
		41.60		-ditto- for external wall
		0.60	24.96	
		39.13		-ditto- for internal wall
		0.40	15.65	Internal wall ℄ = 42,550
				ddt T-Juctions = 9/½/450 = (2025)
				7/½/400 = (1400)
			40.61	= 39,125
		40.61		
		0.15	(6.09)	ddt backfilling
e.				<u>ddt Random rubble work for foundation</u>
		41.60		-ditto- for external wall width 450mm
		0.45		
		0.30	(5.62)	
		41.60		-ditto- for external wall width 300mm
		0.30		
		0.08	(1.00)	
		39.48		-ditto- for internal wall width 300mm
		0.30		Internal wall ℄ = 42,550
		0.15	(1.78)	ddt T-Juctions = 9/½/450 = (2025)
				7/½/300 = (1050)
				= 39,475
		40.15		-ditto- for internal wall width 300mm
		0.30		Internal wall ℄ = 42,550

		0.08	(0.96)	ddt T-Juctions = 9/½/300 = (1350) 7/½/300 = (1050) = 40,150
			(9.35)	ddt backfilling
			3.63	
f.				Hard earth filling under the floor
		2.85		-ditto- for Kitchen
		1.85		L=3000 + 150 - 300 = 2850
		0.17	0.90	W=2000 + 150 + 300 = 1,850
				D=225+20-75=170
	2/	2.80		-ditto- for Bedroom 1&2
		2.75		L=3000 + 100 - 300 = 2800
		0.17	2.62	W=2900 + 150 - 300 = 2,750
				D=170
		2.85		-ditto- for Bedroom 3
		2.75		
		0.17	1.33	
	2/	2.80		-ditto- for Bedroom 4&5
		2.85		
		0.17	2.71	
		2.85		-ditto- for Bedroom 6
		2.85		
		0.17	1.38	
		2.85		-ditto- for Rest Room
		5.85		
		0.17	2.83	
		9.05		-ditto- for Passage
		1.80		
		0.17	2.77	
			14.54	
g.		41.6		200mm thk Brick wall for internal wall
		3.00	124.80	
				<u>Deduct openings</u>
		1.2		ddt door type D1
		2.4	(2.88)	

		0.75		ddt door type D3
		2.1	(1.58)	
		2.4		ddt door type W1
		2.1	(5.04)	
	7/	1.2		ddt door type W2
		1.5	(12.60)	
		41.6		ddt Lintel
		0.15	(6.24)	
			(28.34)	
			96.47	
		41.3		100mm thk Brick wall for internal wall
		3.00	123.90	Internal wall ℄ = 42,550
				ddt T-Juctions = 9/½/200 = (900)
				7/½/100 = (350)
				= 41,300
				<u>Deduct openings</u>
	6/	0.9		ddt door type D2
		2.1	(11.34)	
		0.75		ddt door type D3
		2.1	(1.58)	
		1		ddt Arch
		2.1	(2.10)	
		41.3		ddt Lintel
		0.15	(6.20)	Internal wall ℄ = 42,550
			(21.21)	ddt T-Juctions = 9/½/200 = (900)
				7/½/100 = (350)
				= 41,300
			102.69	
h.		42.40		Plastering to the External wall 15mm thk in 1:5 cement sand finished semi rough
		3.00	127.20	Girth=2(12.30+2/0.20)+2(8.10+2/0.20)=42.40
		1.20		ddt door type D1
		2.40	(2.88)	
		0.75		ddt door type D3
		2.10	(1.58)	
		2.40		ddt door type W1
		2.10	(5.04)	
	7/	1.20		ddt door type W2
		1.50	(12.60)	

			105.11	
h.				Plastering to the Internal wall 15mm thk in 1:5 cement sand finished smooth
		10.00		-ditto- for kitchen
		3.00	30.00	Girth=2(3.00+2.00)
	3/	11.80		-ditto- for Bed Room 1&2&3
		3.00	106.20	
	3/	11.80		-ditto- for Bed Room 4&5&6
		3.00	106.20	
		18.00		-ditto- for Rest Room
		3.00	54.00	
		22.40		-ditto- for Passage
		3.00	67.20	
		1.20		ddt door type D1
		2.40	(2.88)	
		0.75		ddt door type D3
		2.10	(1.58)	
		2.40		ddt door type W1
		2.10	(5.04)	
	7/	1.20		ddt door type W2
		1.50	(12.60)	
	12/	0.90		ddt door type D2
		2.10	(22.68)	
	2/	0.75		ddt door type D3
		2.10	(3.15)	
	2/	1.00		ddt Arch
		2.10	(4.20)	
			311.48	