Higher National Diploma in Civil Engineering

Measurement and Estimation Example 03

Q1. Following figures show a plan of a building, cross section of the relevant foundation and doors & windows schedule.

Assume the followings

- Shown ground level (GL) of the drawing is after removing top soil.
- Wall thickness are 225mm and 125mm as per the plan
- All the walls have same foundation.
- Heights of wall are 3m (up to wall plate) and no gable walls.
- Lintel height is 150mm and width is equal to the wall width.

(**Neat sketches, clear calculations and following the rules when preparing TDS is compulsory**)

Prepare a measurement sheet (TDS sheet) for the following items. (03marks)

a. The centre line length of external walls. (04marks)

b. The centre line length of internal walls. (04marks)

c. The quantities of excavation to the foundations. (04marks)

d. The quantities of screed 1:3:6 (25) of the foundations. (04marks)

e. Random rubble work of foundation. (04 marks)

f. Backfilling trenches. (04marks)

g. Hard-core filling under the floors. (08 marks)

h. Brick work for super structure. (15marks)

i. Plastering internal wall and external walls separately. (15marks)

j. Query sheet. (05marks)

(Total 70 marks)

Q2.

a. Prepare an abstract sheet for any five Items of Q1 (12 marks)

b. Show that the quantities of items (c), (d), (e), (f), (g), (h) and (i) of Q(1) on a BOQ sheet (14 marks)

c. Write short notes for followings related to TDS sheet

   i. Timesing (02marks)

   ii. Brackets (02marks)

(Total 30 marks)

Doors & Windows Schedule

Type	Description	Size (m)
D	Flushed door with above trellis	1.05 x 2.4
D1	Panel door	0.9 x 2.1
D2	Panel door	0.75 x 2.1
W	Glazed window with above trellis	1.5 x 2.1
W1	Glazed window with above trellis	0.5 x 0.6
A1	Flat arch	1.4 x 2.1
A2	Flat arch	0.975 x 2.1

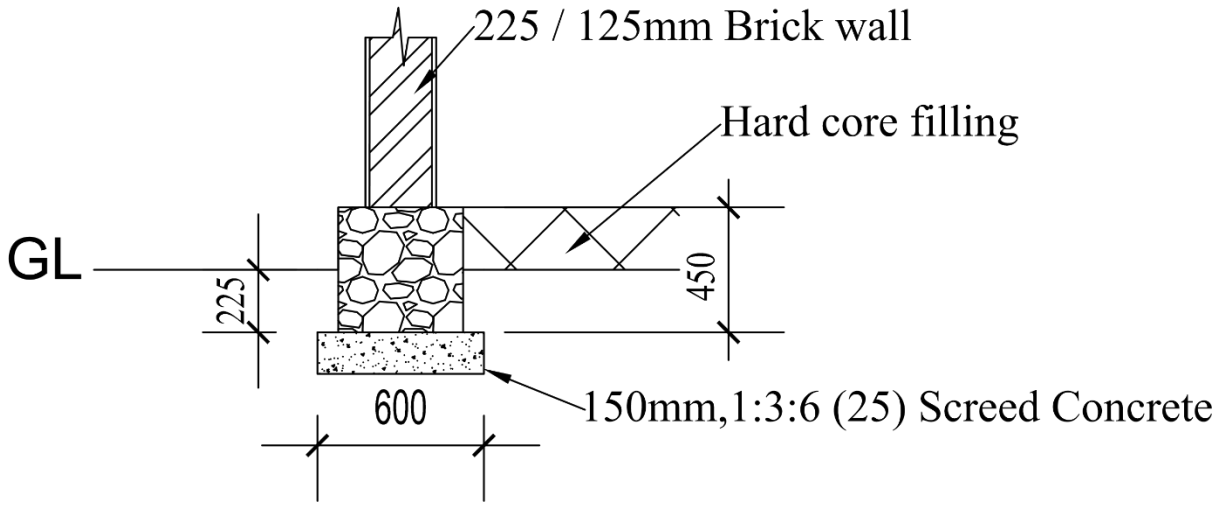

Cross section

Random Rubble foundation

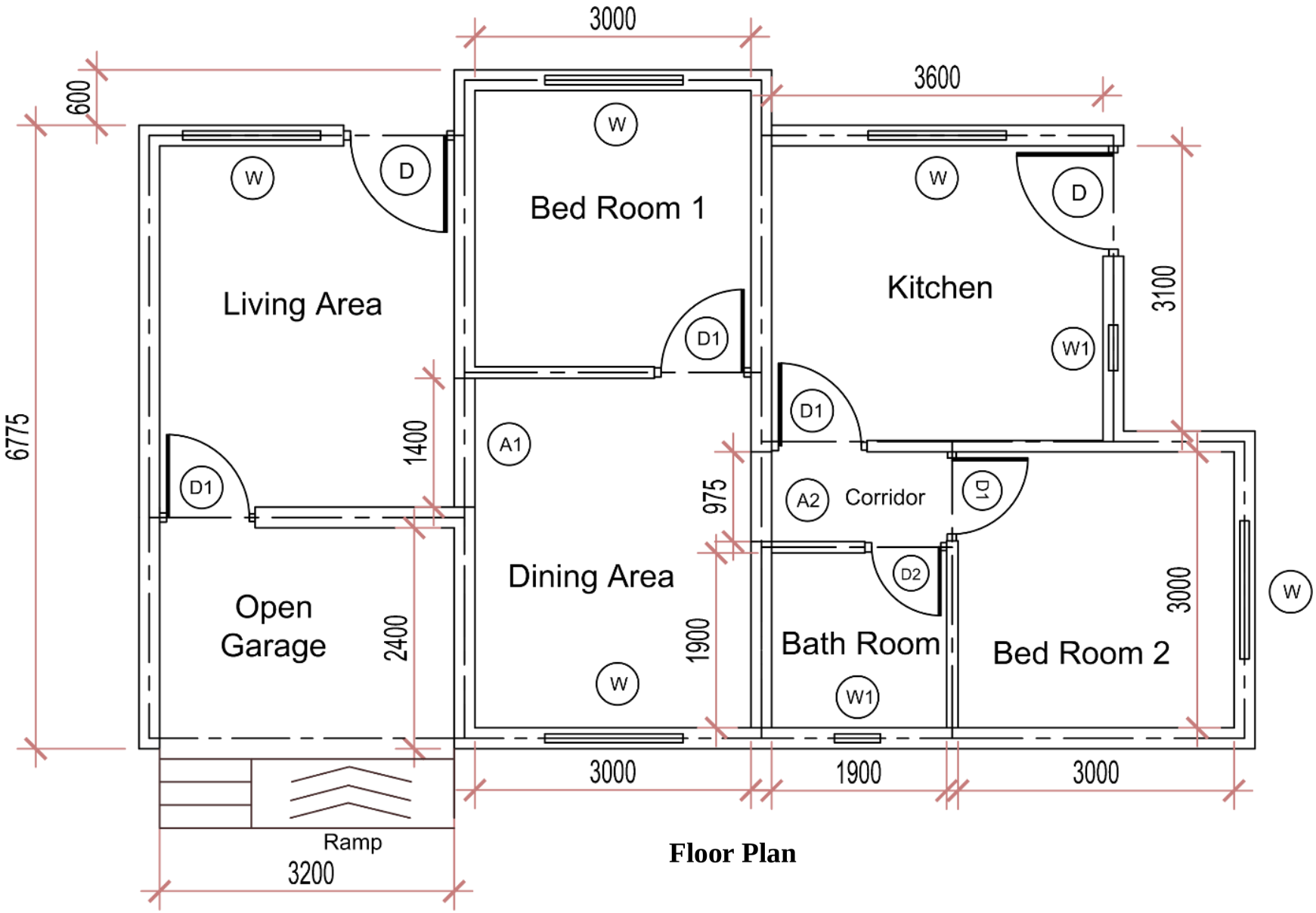
3000
3600
600
6775
Bed Room 1
Living Area
Kitchen
Dining Area
Open
Garage
Corridor
Bath Room
Bed Room 2
Ramp
W
D
D1
D2
A1
A2
W1
1400
2400
975
1900
3100
3000
3200
1900
3000

Floor Plan

Answer SCRIPT – 2018

MEASUREMENT 1

Q. No.	T	D	S	Description
1. a.				Centerline length of external walls
				to vertical
				3.2+3+1.9+3+3/0.225+0.125+1.425+3.6+3+3.2+3/0.225 = 23.80
				to horizontal 3+3.1+2/0.225+6.775-0.225+2/0.6 = 14.30
				38.10m
b.				Centerline length of internal walls
				to vertical 2/6.55+3.225= 16.325m
				to horizontal 3.225+2.075+3.425+3.825=12.55m
				28.875m
c.				Excavation to foundation
				total center lines = 66.975m
				Ddt for T-Junctions
				14/0.5/0.6 =4.2m
		62.78		62.775m
		0.60		
		0.38	14.32	
			14.32	
			14.32	Backfilling
d.				150mm thk screed under the foundation in 1:3:6
		62.78		
		0.60	37.67	
			37.67	
		62.78		Ddt for backfilling
		0.60		
		0.15	(5.65)	
			(5.65)	
e,				RRM wk for the foundation
				total center lines = 66.975m
				Ddt for T-Junctions (Query sheet data = 0.45m)
		63.83		14/0.5/0.45 =3.15m

		0.45		63.825m	
		0.45	12.93		
			12.93		
		63.83		Ddt for back filling	
		0.45			
		0.23	(6.61)		
			(6.61)		
f				backfilling= 14.32-5.65-6.61=**2.06m^3**	
g				Hardcore filling under floors	
		3.70		living	
		2.98			3.7
		0.23	2.54		
		3.58		dining	
		2.78			
		0.23	2.29		
	2/	2.78		Bed room1 &2	
		2.78			
		0.23	3.56		
		3.38		Kitchen	
		2.88			
		0.23	2.24		
		1.63		Bath	
		1.63			
		0.23	0.61		
		1.63		corridor	
		0.70			
		0.23	0.26		
		2.98		Garage	
		1.95			
		0.23	1.34		

			12.84 **m³**	
				Brickwork for superstructure
				225mm thk brick work for the super structure
				(suitable description)
				Centerline length of external walls =38.10
				c/c length if internal walls = 3.425+2/6.55=16.525m
				Total c/c length = 54.625m
		53.95		ddt for T-Junctions
		3.00	161.85	6/0.5/0.225=0.675
				53.95m
				Ddt for openings (Lintels can be deducted separately as per the query sheet assumption)
	2/	1.05		D
		2.55	(5.36)	2.4+0.15= 2.55 (door height + lintel height, i.e.: - door width = lintel length)
				D1
		0.90		
		2.25	(2.03)	
		1.40		A1
		2.25	(3.21)	
		0.98		A2
		2.25	(2.21)	
		3.20		Garage Opening
		3.00	(9.60)	
	5/	1.50		W
		2.33	(3.50)	
	2/	0.50		W1
		0.83	(0.42)	
			(26.33)	(Answer may vary based on assumptions)
			135.52	
				125mm thk brick work for the super structure
				(suitable description)

			Centerline length of internal walls = 28.875
			ddt for 225 walls
			225mm walls = 2/6.55+3.425 = (16.525)
			ddt for T-Junctions
			225-125 6/0.5/0.225 = (0.675)
			125-125 1/0.5/0.125 = (0.0625)
			Ddt T for BR 2 wall 1/0.5/0.225 = (0.1125)
	11.50		(If walls measured separately 3+1.9+3.6+3=11.50)
	3.00	34.50	
			Ddt for openings
3/	0.9		D1
	2.25	(2.03)	
	0.75		D2
	2.25	(1.69)	
		(3.72)	
		30.78	
	39.00		External wall plastering
	3.00	117.00	Girth = 39m
			Ddt for openings
2/	1.05		D
	2.55	(5.36)	2.4+0.15= 2.55
	3.20		Garage Opening
	3.00	(9.60)	
5/	1.50		W
	2.33	(3.50)	
2/	0.50		W1
	0.83	(0.42)	
		98.12	
			Internal wall plastering
	14.25		Living Area
	3.00	42.75	Girth = 2/3925+2/3200
	12.35		Bed Room 1
	3.00	37.05	Girth = 2/3175+2/3000
	12.00		Bed Room 2
	3.00	36.00	Girth = 4/3000
	13.60		Dining Area
	3.00	40.80	Girth = 2/3800+2/3000
	13.40		Kitchen
	3.00	40.20	Girth = 2/3600+2/2100
	7.60		

		3.00	22.80	Bath Room Girth = 4/1900
		5.75 3.00	17.25	Corridor Girth = 2/1900+2/975
		10.75 3.00	32.25	Open Garage Girth = 2/2175+2/3200
	4/2	0.9 2.1	(15.12)	ddt for openings D1
	2/	1.05 2.40	(5.04)	D
	5/	1.50 2.10	(12.60)	W
	2/	1.40 2.10	(5.88)	A1
	2/	0.98 2.10	(4.12)	A2
		3.20 3.00	(9.60)	Garage
	2/	0.50 0.60	(0.60)	W1
	2/	0.75 2.10	(1.58)	D2
			214.56	

Query Sheet

Project:
To: **Issuing date:**
From: **Received date:**

Ref.	Question	Answer
1	width of RRM	assumed 0.45m
2	length of lintels	assumed that width of door/window

Abstract Sheet

No.	Item description	Units	Gross Quantity	Addition	Deduction	Quantity	Pg. No
1	Excavation to foundation	m3	12.52			12.52	
	Backfilling	m3	12.52		4.94		
					5.9	1.68	
	150mm thk screed under the foundation in 1:3:6	m2	32.94			32.94	
	RRM wk for the foundation	m3	11.54			11.54	

OR

Project :

Dwg.Ref. :

Excavation to foundation trench					
14.32 (0) 14.32 $14.32m^3$	Ddt 0				
225mm Brick work					
161.85 (26.35) 135.50 $135.50m^3$	Ddt 26.35				

BOQ

No.	Description	Units	Quantity	Rates	Amount
c	Excavation	M^3	14.32	N/A	N/A
d	Screed Concrete	M^2	37.67	N/A	N/A
e	R/R masonry	M^3	12.93	N/A	N/A
f	Back filling	M^3	2.06	N/A	N/A
g	Hard Earth filling	M^3	13.23	N/A	N/A
h-1	225mm Bk.Wk	M^2	135.52	N/A	N/A
h-2	125 Bk.Wk	M^2	30.78	N/A	N/A
i-1	Internal Plastering	M^2	214.56	N/A	N/A
i-2	External Plastering	M^2	98.12	N/A	N/A

Fill this document with calculated values (Rate and Amount is not needed)

- **Timesing**

  Sometimes when the taker-off has written the dimensions, it is found that there are several similar items having the same measurements and to indicated that the measurement is to be multiplied it will be ‘timesed’ thus;
- **Brackets**

  A bracket is used whenever more than one measurement to description or group of descriptions. The bracket being placed outside of the squaring column, a vertical with a little cross marks to indicated top and bottom.