Higher National Diploma in Quantity surveying
First Year, Second Semester Examination – 2019
QS 12013 - Measurement 1

Instructions for Candidate:	**No. of Questions**	: 02
Answer all questions	**No. of Pages**	: 03
	Time	: 03 (hours)

Q1. Answer following questions based on given building plan, and cross section of the relevant foundation, doors & windows schedule.

Assume the followings

- Wall thickness are 225mm and 110mm as per the plan
- Heights of wall are 3m (up to wall plate) and roof pitch 20°.
- Lintel height is 150mm and width is equal to the wall width.
- Method of measurement for Building works should be followed (Unscripted copy).

(Neat sketches, clear calculations and following the rules when preparing TDS is compulsory)

Prepare a measurement sheet (TDS sheet) for the following items. (03marks)

a. The centre line length of external walls. (03marks)

b. The centre line length of internal walls. (03marks)

c. Take off quantities for excavation of the foundations. (05marks)

d. Take off quantities for screed 1:3:6 (25) of the foundations. (04marks)

e. Random rubble masonry (m^3). (06 marks)

f. Hard-core filling under the floors. (08 marks)

g. Floor concrete (08 marks)

h. 225mm Brick work for super structure. (10marks)

i. 110mm Brick work for super structure. (05marks)

j. Internal and external wall plastering separately. (15marks)

k. Prepare a Query sheet. (05marks)

(Total 75 marks)

Q2.

a. Show that the quantities of items (c), (d), (e), (f), (g), (h), (i) and (j) of Q(1) on a BOQ sheet (12 marks)

b. Write short notes for followings

i. Importance of Standard Method of Measurement (04marks)

ii. Importance of BOQ (04marks)

iii. Steps to be followed on preparation of BOQ (05marks)

(Total 25 marks)

Doors & Windows Schedule

	Type	Description	Size (m)
1	D	Panel door with door frame 100mmx75mm	1.20 x 2.1
2	D1	Panel door with door frame 100mmx75mm	1.05 x 2.1
1	D2	Panel door with door frame 100mmx75mm	0.90 x 2.1
2	D3	Panel door with door frame 100mmx75mm	1.65 x 2.4
6	W	Glazed window with louver on the top	1.20 x 1.20
3	W1	Glazed window with louver on the top	1.60 x 1.20
1	A	Flat arch	1.05 x 2.1

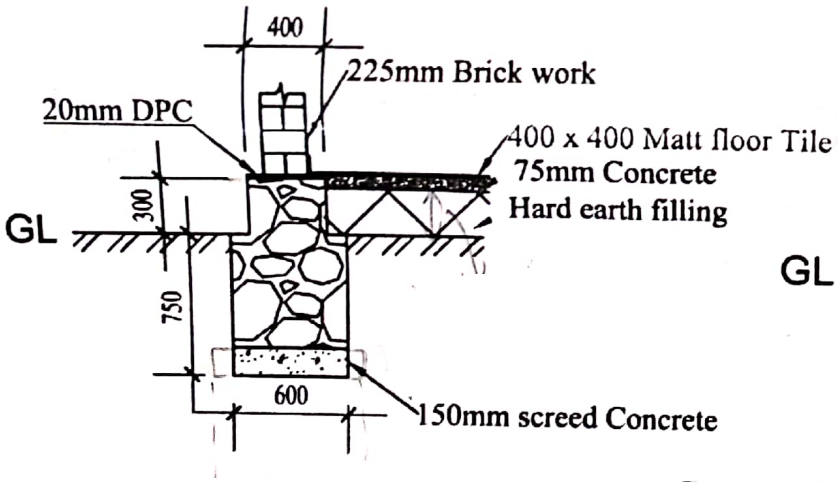

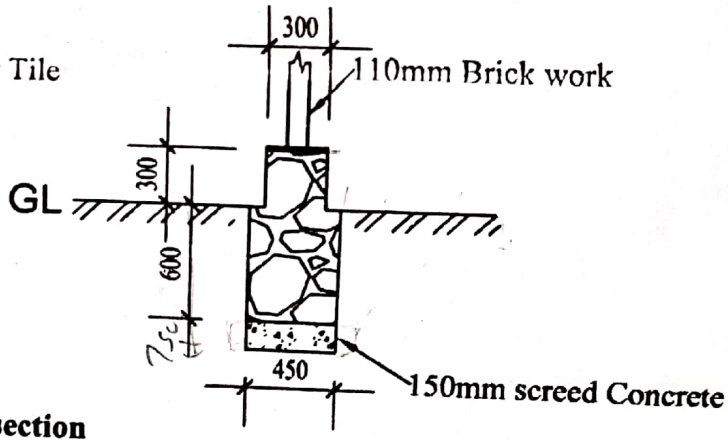

Cross section
Random Rubble foundation

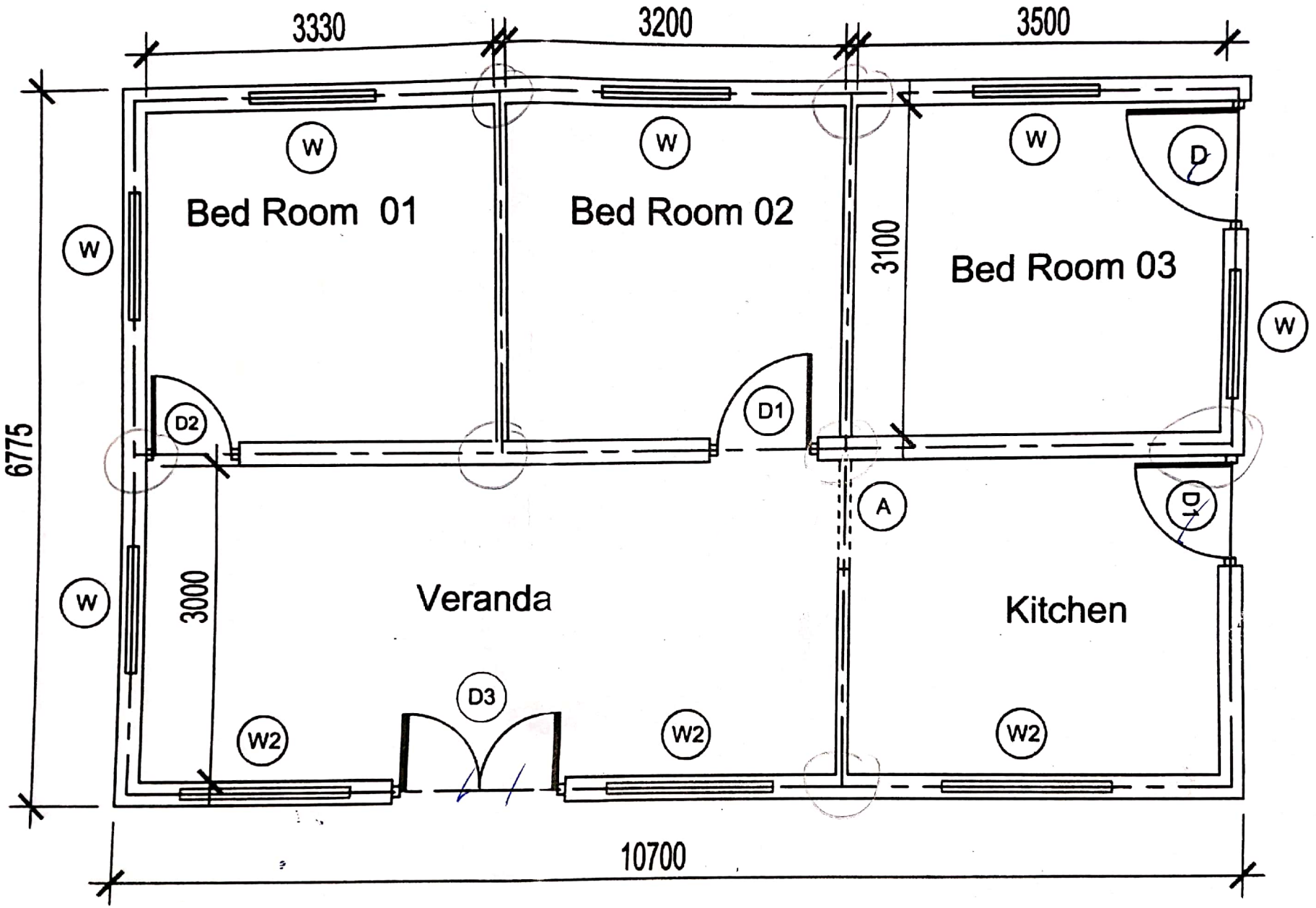
3330
3200
3500
6775
10700
3100
3000
Bed Room 01
Bed Room 02
Bed Room 03
Veranda
Kitchen
W
D
D1
D2
D3
A
W2