Higher National Diploma in Quantity Survey

2nd Year, Second Semester Examination – 2019

QS22053 – Information Technology IIB (AutoCAD)

Instructions for Candidates:
Answer only **one** question
All questions carry equal marks.
Save all files on the desktop using your index number

No. of pages: 04
No. of questions: 02
Time: Two (02) Hours

---

1. Design a bench through the following steps.

   a. Create cross sections of a leg of the bench as specified in the following diagram. (25 Marks)

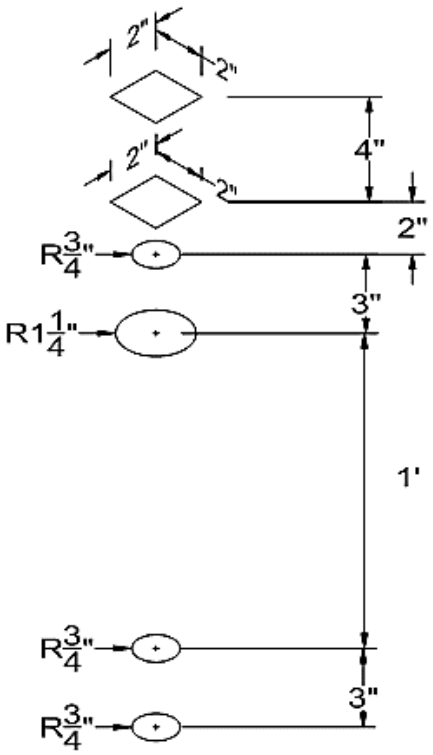

b. Create the leg using suitable tool/s (25 Marks)

c. Create four legs and join them using a frame according to the given dimensions as shown below figure. (20 Marks)

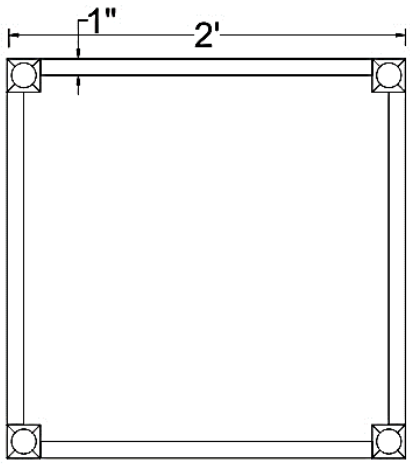

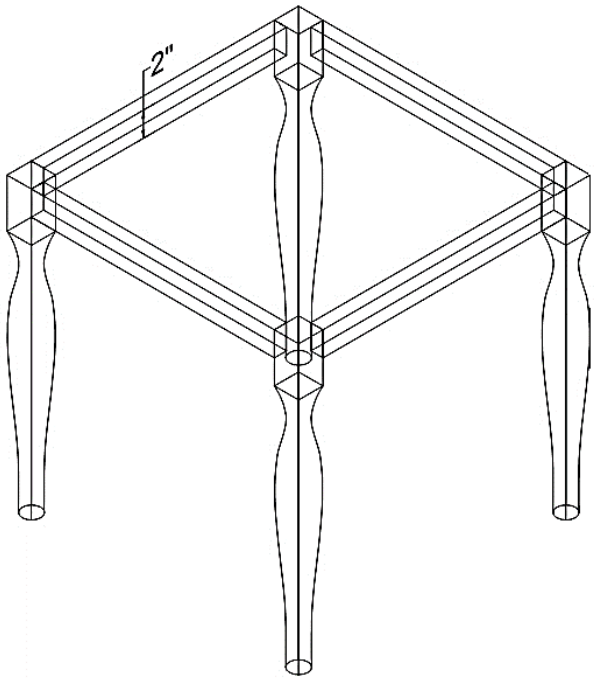

d. Create a top for the bench as shown below figure. (fillet the top edges taking radius as 0.5 inch) (15 Marks)

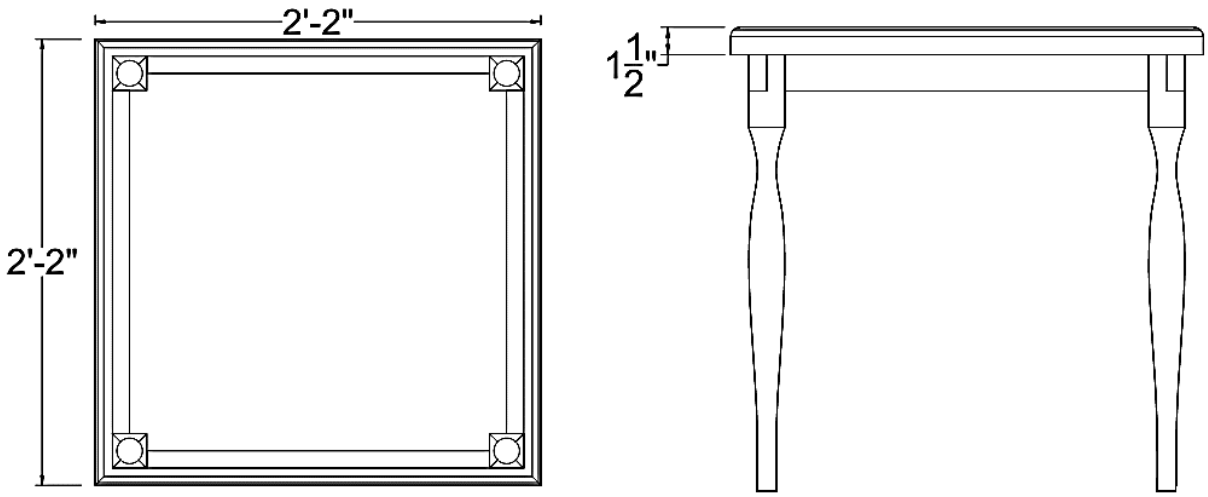

e. Type your index number at the top of the drawing and plot it using PDF plotter for A4 paper and save the both plotted PDF and source (.DWG) file using your index number on desktop. (15 Marks)

2. Create the drawing shown in figure 1 using AutoCAD software by covering the following areas.

a. Draw the walls according to the given dimensions. (35 Marks)

b. Different layers for Walls, Dimensions, Doors, Windows and Text (20 Marks)

c. Hatch the Walls. (10 Marks)

d. Draw the doors and windows (25 Marks)

e. Type your index number at the top of the drawing and plot it using PDF plotter for A4 paper and save the both plotted PDF and source (.DWG) file using your index number on desktop. (10 Marks)

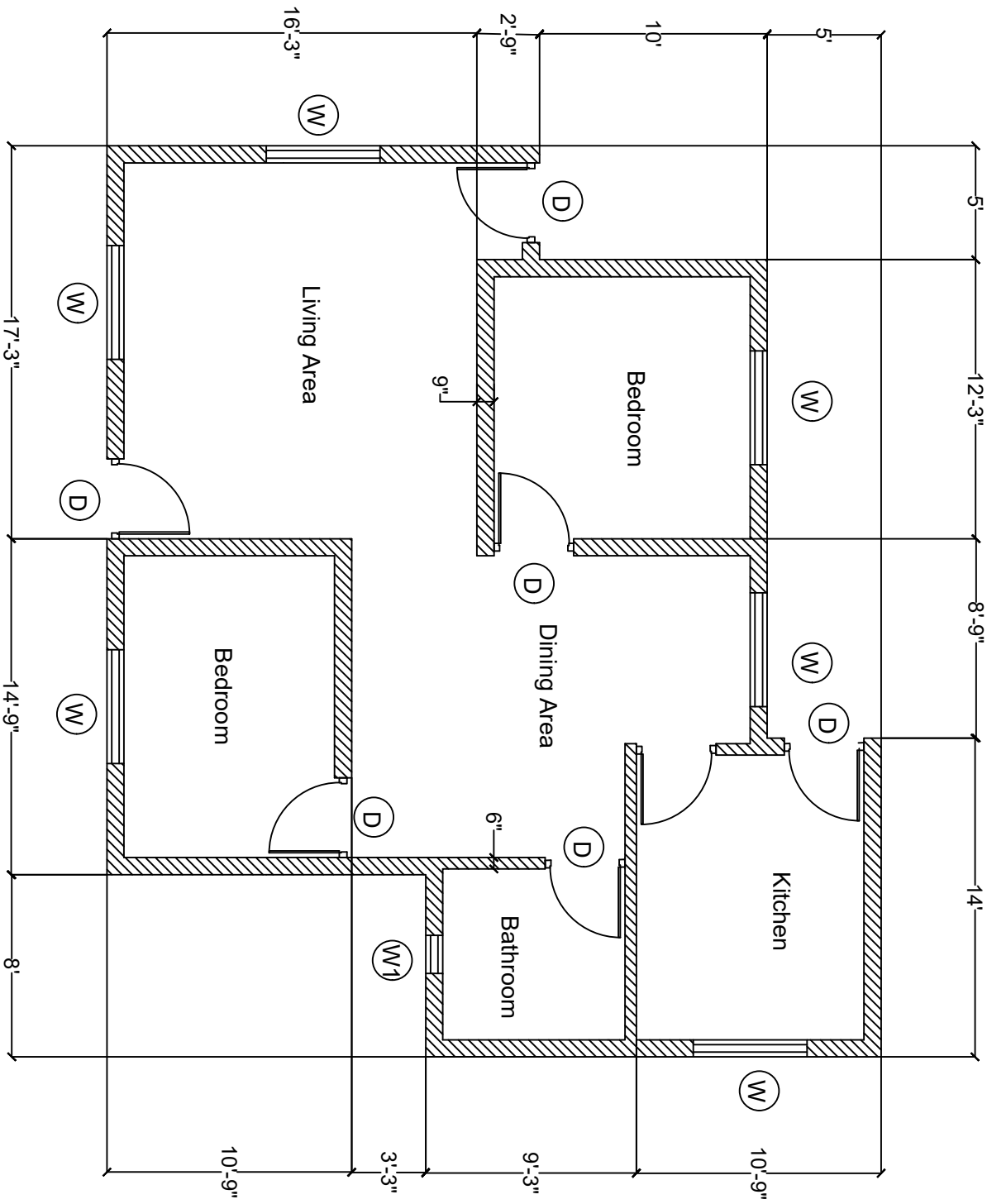

Specification of Doors and Windows

Type	Size (with frame)	Description
D	42" x 78"	Door with 4" x 3" Frame
W	60" x 60"	Window with 4" x 3" Frame
W1	20" x 18"	Window with 4" x 3" Frame