Higher National Diploma in Quantity surveying

Second Year, Second Semester Examination – 2022

QS22053 : AutoCAD

Instructions for candidates:
Answer all questions.

No. of questions : 07
No. of pages : 02
Time : 02 Hours

---

1. Create a folder on your desktop and rename the folder by your index number without the character '/'. for example, if your index number is JAF/QS/2022/F/0001 then the folder name should be **JAFQS2022F0001**. [5 Marks]

2. Open AutoCAD, create a new drawing file and save the file to your folder already created.

   The drawing file name is also your index number without the '/' character. [5 Marks]

3. Create a separate layer to specify the dimensions. [5 Marks]

4. Draw the figure given below. All units are in inches [20Marks]

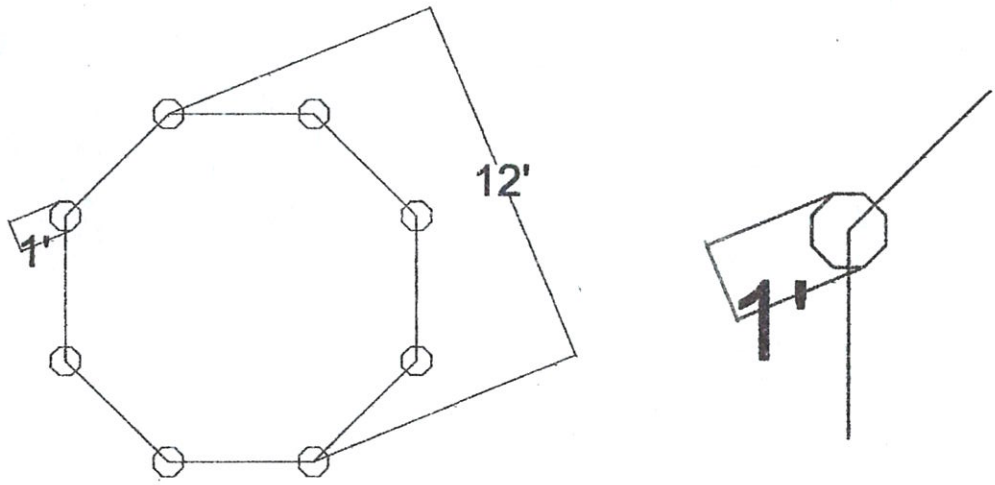

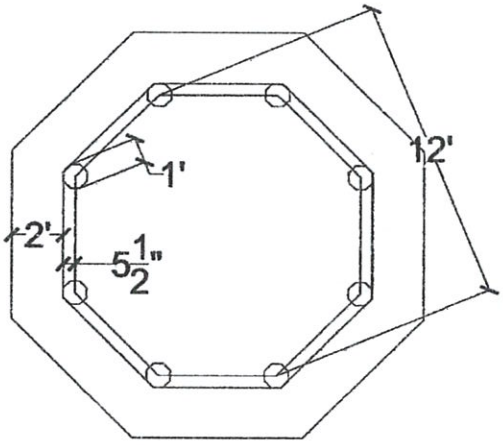

5. Based on the above profile, create a 3D water tank as shown below. The internal wall thickness of the tank is 9 inches. [50 Marks]

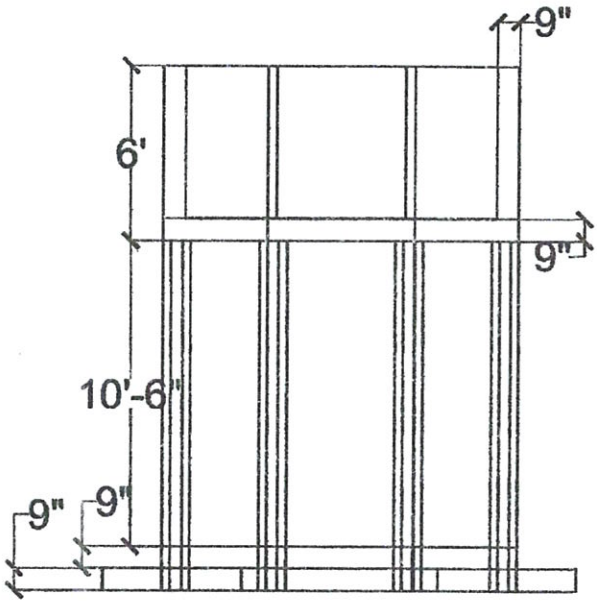

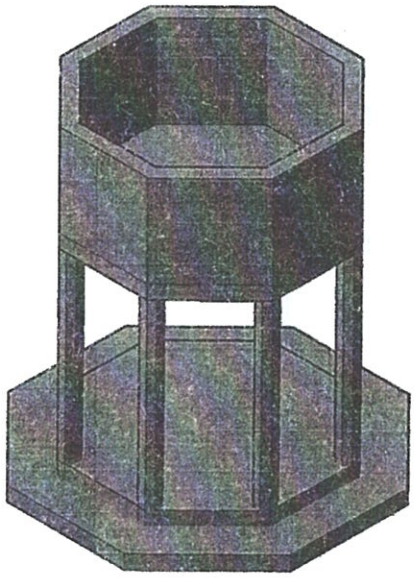

6. Create two vertical viewports on a Layout and display Front and SE Isometric views on each viewport respectively. [10 Marks]

7. Create a PDF file of your layout and save your drawing in the same folder created in part (1) [05 Marks]