Higher National Diploma in Quantity Surveying

Second Year, Second Semester Examination – 2018

QS 22073- Structural Design and Detailing

Instructions for Candidates:
Answer **Five (05)** questions only.
Codes : BS8110, BS5950, BS5268

No. of questions : 06
No. of pages : 05
Time : Three (03) hours

Fig-01 and Fig-02 show a plan and a section view of the floor slab. Consider following details for **Question 01, Question 02** and **Question 03**

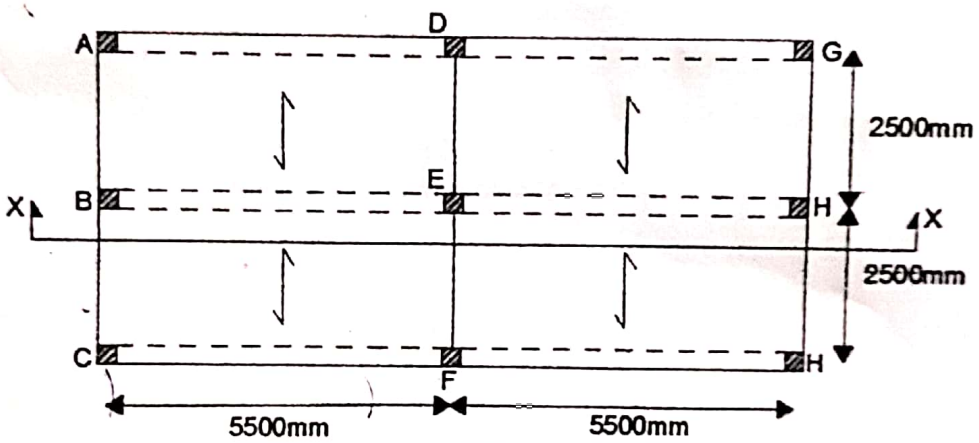

PLAN VIEW

Fig -01

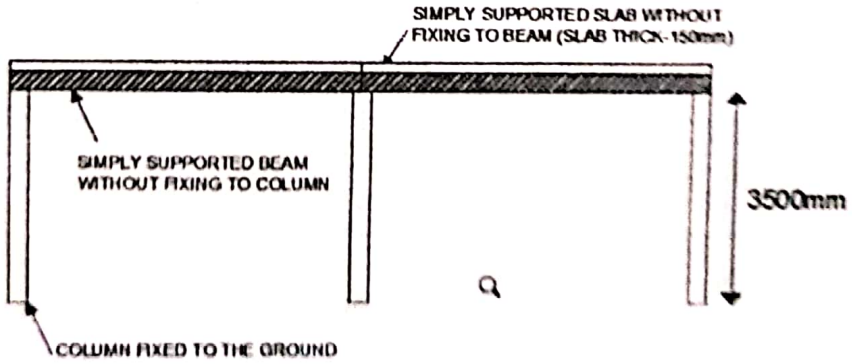

SECTION X-X

Fig -02

Consider following details for the design.

1) Thickness of the floor slab is 150mm
2) Cover required for the main reinforcement is 30mm and reinforcement should be used 10mm tor steel for Slabs
3) Characteristic strength of the concrete 30N/mm^2 and Characteristic yield strength of the steel 460N/mm^2
4) Density of the concrete = 24 kN/m^3
5) Beam and Column size should be 300*300mm
6) The slab is carrying live load 3.0kN/m^2 and loading from ceiling and finishes of the slab 1.5kN/m^2
7) Height of the column from top of the footing to soffit of the beam is 3500mm
8) Bearing capacity of the soil is 100kN/m^2 and footing size is 2500*2500*350mm

01.

150mm thick floor slab is resting on the beam as a simply supported one-way slab (there are no connection between slab and beam). Using given data

a) Design the reinforcement of slab
b) Check the deflection
c) Check the Shear
d) Draw the curtailment arrangement (reinforcement detailing) for the slab

(20 Marks)

02.

All the Beams (AD, DG, BE, EH, CF and FH) are resting on the columns as a simply supported beam. (There are no fixing between the beam and column). Using given data, design the reinforcement for the simply supported beam **'B-E'** & also check the deflection and shear.

(20 Marks)

03.

The column **'E'** should be designed to withstand the 1000kN ultimate force addition to the load from beam and slab. Using given data

a) Calculate the ultimate axial compression force acting on the column **'E'**
b) Design the longitudinal reinforcement for the column (300*300mm) **'E'** which is support the axial load at ultimate limit state (you may use $N = 0.35f_{cu}A_c+0.7A_{sc}f_y$).
c) Show that, punching shear check for the connection between the columns **'E'** and footing is fail. (Assume only axial load is acting on the footing)

(20 Marks)

04.

Cantilever beam AB is connected with steel column using 6nos of bolts as shown in Fig-03, below. Vertical load 50kN and Horizontal Load 30kN is applied at the end of the beam 'B'.

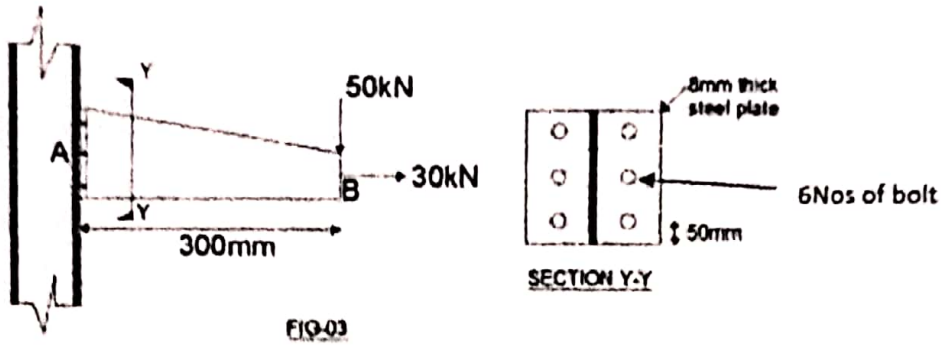

FIG-03

The bolt diameter is 16mm & bolt grade 8.8,

Thickness of the steel plate is 8mm and Steel plate grade is S275

Spacing between the bolts is 75mm, using given data, show that proposed connection is suitable to resist the load acting on the cantilever beam AB.

(20 Marks)

05.

4.5m span timber floor is constructed using 100*200mm **Kempas (D60)** timber beam at inside of the building. Serviceable loading (Dead +Imposed) acting on the beam is 2.5kN/m. (Max deflection for the simply supported beam = $5wl^4/384EI$)

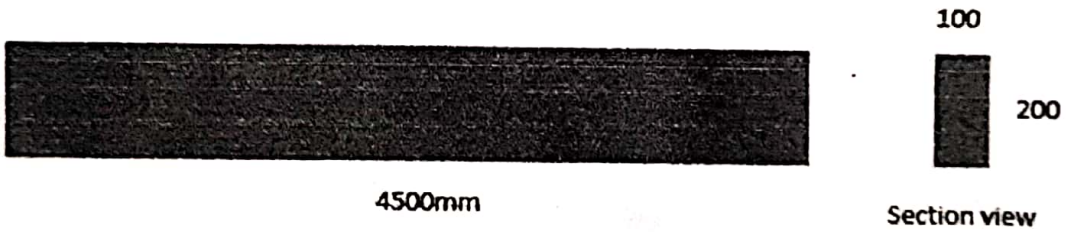

By using given data,

a) Check for bending
b) Check for Shear
c) Check the deflection

(20 Marks)

06.

Answer to all questions

a) What do you meant by 'braced column' and 'un-braced column'?

b) List down the principle steps for the Pad footing design?

c) Discuss the advantages and disadvantages of using timber as a structural material?

d) Briefly discuss the importance of the partial factor of safety for the materials and loads in the structural design.

e) Define the following terms involved in the structural design

1) Slenderness ratio
2) Durability of the concrete. (20 Marks)

Shear strength of bolts

Bolt Grade	Shear strength(N/mm^2)
4.6	160
8.8	375
10.9	400

Bearing strength of bolts

Bolt Grade	Bearing strength(N/mm^2)
4.6	460
8.8	1000
10.9	1300

Bearing strength of connected plates

Steel Grade	S275	S355	S460
Bearing strength(N/mm^2)	460	550	670

Bearing capacity of bolt $P_{bb} = dt_p p_{bb}$
Bearing capacity of connected plates, $P_{bs} = k_{bs} d t_p P_{bs}$ but $P_{bs} < 0.5 k_{bs} e t_p p_{bs}$
$K_{bs} = 1$ for standard clearance holes, e = edge distance,
d = Nominal diameter of bolt
t_p = thickness of the connected plate

Tensile stress area

Nominal size and thread diameter (mm)	Tensile stress area (mm^2)
15	84.5
16	157
20	245
22	303
24	353

Tensile strength of bolts

Bolt Grade	Tensile strength(N/mm^2)
4.6	240
8.8	560
10.9	700

Area's of Reinforcement
Cross-sectional areas of groups of bars (mm^2)

Bar Size	Number of Bars * Denotes non-preferred sizes									
	1	2	3	4	5	6	7	8	9	10
6mm	28.3	56.5	84.8	113	141	170	198	226	255	283
8mm	50.3	100	151	201	251	302	352	402	452	503
10mm	78.5	157	236	314	339	471	550	628	707	785
12mm	113.1	226	339	452	566	679	792	905	1718	1131
16mm	201.1	402	603	804	1005	1206	1407	1608	1810	2011
20mm	314.2	628	942	1257	1571	1885	2199	2513	2827	3142
25mm	490.9	982	1473	1963	2454	2945	3436	3927	4418	4909
32mm	804.2	1608	2413	3217	4021	4825	5630	6434	7238	8042
40mm	1257.0	2513	3770	5026	6283	7540	8790	10053	11310	12566
50mm*	1963.5	3927	5890	7854	9812	11781	13744	15708	17671	19635

Cross-sectional areas for Specific Spacings in mm^2 / Metre Width

Bar Size	Spacing of Bars (Millimetres) * Denotes non-preferred sizes									
	75	100	125	150	175	200	225	250	275	300
6mm *	377	283	226	188	162	141	125	113	103	94
8mm	670	503	402	335	287	251	223	201	183	168
10mm	1047	786	628	524	449	393	348	314	285	262
12mm	1508	1131	905	754	646	565	503	452	411	377
16mm	2681	2011	1608	1340	1149	1005	894	801	731	670
20mm	4189	3142	2513	2094	1795	1571	1396	1257	1143	1047
25mm	6545	4909	3927	3272	2805	2454	2182	1963	1785	1636
32mm	-	8042	6434	5362	4596	4021	3574	3217	2924	2681
40mm	-	-	10053	8378	7181	6283	5587	5027	4571	4189
50mm*	-	-	-	13090	11220	9617	8727	7854	7140	6545